Apple Inc. v. Samsung Electronics Co. Ltd. et al
Doc. 462 Att. 6

Exhibit D

Dockets.Justia.com

U 7293220

THE UNITED STATES OF AMERICA

TO ALL TO WHOM THESE PRESENTS SHALL COME:

UNITED STATES DEPARTMENT OF COMMERCE
United States Patent and Trademark Office

April 26, 2011

THIS IS TO CERTIFY THAT ANNEXED HERETO IS A TRUE COPY FROM THE RECORDS OF THIS OFFICE OF:

U.S. PATENT: *7,812,828*
ISSUE DATE: *October 12, 2010*

By Authority of the
Under Secretary of Commerce for Intellectual Property
and Director of the United States Patent and Trademark Office

P. SWAIN
Certifying Officer

UNITED STATES PATENT AND TRADEMARK OFFICE
DEPARTMENT OF COMMERCE

US007812828B2

(12) **United States Patent**
Westerman et al.

(10) **Patent No.: US 7,812,828 B2**
(45) **Date of Patent: Oct. 12, 2010**

(54) **ELLIPSE FITTING FOR MULTI-TOUCH SURFACES**

(75) Inventors: **Wayne Westerman**, San Francisco, CA (US); **John G. Elias**, Townsend, DE (US)

(73) Assignee: **Apple Inc.**, Cupertino, CA (US)

(*) Notice: Subject to any disclaimer, the term of this patent is extended or adjusted under 35 U.S.C. 154(b) by 707 days.

(21) Appl. No.: **11/677,958**

(22) Filed: **Feb. 22, 2007**

(65) **Prior Publication Data**

US 2007/0139395 A1 Jun. 21, 2007

Related U.S. Application Data

(63) Continuation of application No. 11/015,434, filed on Dec. 17, 2004, now Pat. No. 7,339,580, which is a continuation of application No. 09/236,513, filed on Jan. 25, 1999, now Pat. No. 6,323,846.

(60) Provisional application No. 60/072,509, filed on Jan. 26, 1998.

(51) **Int. Cl.**
G06F 3/041 (2006.01)

(52) **U.S. Cl.** **345/173**; 345/174; 345/175; 178/18.01; 178/18.03

(58) **Field of Classification Search** 345/173–178; 178/18.01, 18.03, 19.01, 20.01; 715/863
See application file for complete search history.

(56) **References Cited**

U.S. PATENT DOCUMENTS

3,333,160	A	7/1967	Gorski
3,541,541	A	11/1970	Engelhart
3,662,105	A	5/1972	Hurst et al.
3,798,370	A	3/1974	Hurst
4,237,421	A	12/1980	Waldron
4,246,452	A	1/1981	Chandler
4,266,144	A	5/1981	Bristol
4,290,061	A	9/1981	Serrano
4,291,303	A	9/1981	Cutler et al.
4,550,221	A	10/1985	Mabusth
4,561,002	A	12/1985	Chiu
4,672,364	A	6/1987	Lucas
4,672,558	A	6/1987	Beckes et al.

(Continued)

FOREIGN PATENT DOCUMENTS

CA	1243096	10/1988

(Continued)

OTHER PUBLICATIONS

Chang, C-C. et al. (Aug. 1, 1993). "A Hashing-Oriented Nearest Neighbor Searching Scheme," *Pattern Recognition Letters*, 14(8):625-630.

(Continued)

Primary Examiner—Amare Mengistu
Assistant Examiner—Koosha Sharifi
(74) *Attorney, Agent, or Firm*—Morrison & Foerster LLP

(57) **ABSTRACT**

Apparatus and methods are disclosed for simultaneously tracking multiple finger and palm contacts as hands approach, touch, and slide across a proximity-sensing, multi-touch surface. Identification and classification of intuitive hand configurations and motions enables unprecedented integration of typing, resting, pointing, scrolling, 3D manipulation, and handwriting into a versatile, ergonomic computer input device.

35 Claims, 45 Drawing Sheets

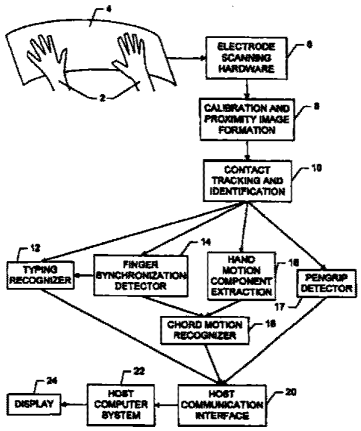

Copy provided by USPTO from the PIPS Image Database on 04/05/2011

U.S. PATENT DOCUMENTS

4,692,809	A		9/1987	Beining et al.
4,695,827	A		9/1987	Beining et al.
4,733,222	A		3/1988	Evans
4,734,685	A		3/1988	Watanabe
4,746,770	A		5/1988	McAvinney
4,771,276	A		9/1988	Parks
4,788,384	A		11/1988	Bruere-Dawson et al.
4,806,846	A		2/1989	Kerber
4,898,555	A		2/1990	Sampson
4,968,877	A		11/1990	McAvinney et al.
5,003,519	A		3/1991	Noirjean
5,017,030	A		5/1991	Crews
5,178,477	A		1/1993	Gambaro
5,189,403	A		2/1993	Franz et al.
5,194,862	A		3/1993	Edwards
5,224,861	A		7/1993	Glass et al.
5,241,308	A		8/1993	Young
5,252,951	A		10/1993	Tannenbaum et al.
5,270,711	A		12/1993	Knapp et al.
5,281,966	A		1/1994	Walsh
5,305,017	A		4/1994	Gerpheide
5,327,161	A		7/1994	Logan et al.
5,345,543	A		9/1994	Capps et al.
5,369,228	A		11/1994	Faust
5,376,948	A		12/1994	Roberts
5,379,057	A		1/1995	Clough et al.
5,398,310	A		3/1995	Tchao et al.
5,442,742	A		8/1995	Greyson et al.
5,463,388	A		10/1995	Boie et al.
5,463,696	A		10/1995	Beernink et al.
5,471,578	A		11/1995	Moran et al.
5,479,528	A		12/1995	Speeter
5,483,261	A		1/1996	Yasutake
5,488,204	A		1/1996	Mead et al.
5,495,077	A		2/1996	Miller et al.
5,513,309	A		4/1996	Meier et al.
5,523,775	A		6/1996	Capps
5,530,455	A		6/1996	Gillick et al.
5,543,590	A		8/1996	Gillespie et al.
5,543,591	A		8/1996	Gillespie et al.
5,548,667	A		8/1996	Tu
5,563,632	A		10/1996	Roberts
5,563,996	A		10/1996	Tchao
5,565,658	A		10/1996	Gerpheide et al.
5,579,036	A		11/1996	Yates, IV
5,581,276	A		12/1996	Cipolla et al.
5,581,484	A		12/1996	Prince
5,581,681	A		12/1996	Tchao et al.
5,583,946	A		12/1996	Gourdol
5,589,856	A		12/1996	Stein et al.
5,590,219	A		12/1996	Gourdol
5,592,566	A		1/1997	Pagallo et al.
5,594,469	A		1/1997	Freeman et al.
5,594,810	A		1/1997	Gourdol
5,596,694	A		1/1997	Capps
5,612,719	A		3/1997	Beernink et al.
5,625,715	A		4/1997	Trew et al.
5,631,805	A		5/1997	Bonsall
5,633,955	A		5/1997	Bozinovic et al.
5,634,102	A		5/1997	Capps
5,636,101	A		6/1997	Bonsall et al.
5,642,108	A		6/1997	Gopher et al.
5,644,657	A		7/1997	Capps et al.
5,666,113	A		9/1997	Logan
5,666,502	A		9/1997	Capps
5,666,552	A		9/1997	Greyson et al.
5,675,361	A		10/1997	Santilli
5,675,362	A		10/1997	Clough et al.
5,677,710	A		10/1997	Thompson-Rohrlich
5,689,253	A		11/1997	Hargreaves et al.
5,710,844	A		1/1998	Capps et al.
5,729,249	A		3/1998	Yasutake
5,729,250	A		3/1998	Bishop et al.
5,730,165	A		3/1998	Philipp
5,736,976	A		4/1998	Cheung
5,741,990	A		4/1998	Davies
5,745,116	A		4/1998	Pisutha-Amond
5,745,716	A		4/1998	Tchao et al.
5,746,818	A		5/1998	Yatake
5,748,184	A	*	5/1998	Shieh 345/173
5,748,269	A		5/1998	Harris et al.
5,764,222	A		6/1998	Shieh
5,767,457	A		6/1998	Gerpheide et al.
5,767,842	A		6/1998	Korth
5,790,104	A		8/1998	Shieh
5,790,107	A		8/1998	Kasser et al.
5,802,516	A		9/1998	Shwarts et al.
5,808,567	A		9/1998	McCloud
5,809,267	A		9/1998	Moran et al.
5,821,690	A		10/1998	Martens et al.
5,821,930	A		10/1998	Hansen
5,823,782	A		10/1998	Marcus et al.
5,825,351	A		10/1998	Tam
5,825,352	A	*	10/1998	Bisset et al. 345/173
5,835,079	A		11/1998	Shieh
5,837,947	A		11/1998	Teterwak
5,854,625	A		12/1998	Frisch et al.
5,856,824	A		1/1999	Shieh
5,877,748	A		3/1999	Redlich
5,880,411	A		3/1999	Gillespie et al.
5,883,619	A		3/1999	Ho et al.
5,886,697	A		3/1999	Naughton et al.
5,896,126	A	*	4/1999	Shieh 345/173
5,898,434	A		4/1999	Small et al.
5,917,476	A		6/1999	Czerniecki
5,920,309	A		7/1999	Bisset et al.
5,923,319	A		7/1999	Bishop et al.
5,933,134	A		8/1999	Shieh
5,943,043	A		8/1999	Furuhata et al.
5,943,044	A		8/1999	Martinelli et al.
5,982,302	A		11/1999	Ure
5,995,106	A		11/1999	Naughton et al.
6,002,389	A		12/1999	Kasser
6,002,808	A		12/1999	Freeman
6,020,881	A		2/2000	Naughton et al.
6,031,524	A		2/2000	Kunert
6,037,882	A		3/2000	Levy
6,050,825	A		4/2000	Nichol et al.
6,052,339	A		4/2000	Frenkel et al.
6,061,177	A		5/2000	Fujimoto
6,072,494	A		6/2000	Nguyen
6,084,576	A		7/2000	Leu et al.
6,097,371	A		8/2000	Siddiqui et al.
6,107,997	A		8/2000	Ure
6,128,003	A		10/2000	Smith et al.
6,131,299	A		10/2000	Raab et al.
6,135,958	A		10/2000	Mikula-Curtis et al.
6,144,380	A		11/2000	Schwarts et al.
6,147,680	A	*	11/2000	Tareev 345/173
6,154,209	A		11/2000	Naughton et al.
6,160,551	A		12/2000	Naughton et al.
6,188,391	B1		2/2001	Seely et al.
6,198,515	B1		3/2001	Cole
6,208,329	B1		3/2001	Ballare
6,222,465	B1		4/2001	Kumar et al.
6,239,790	B1		5/2001	Martinelli et al.
6,243,071	B1		6/2001	Shwarts et al.
6,246,862	B1		6/2001	Grivas et al.
6,249,606	B1		6/2001	Kiraly et al.
6,255,604	B1		7/2001	Tokioka et al.
6,278,443	B1		8/2001	Amro et al.
6,288,707	B1		9/2001	Philipp
6,289,326	B1		9/2001	LaFleur
6,292,178	B1		9/2001	Bernstein et al.

Copy provided by USPTO from the PIRS Image Database on 04/25/2011

6,323,846	B1	11/2001	Westerman et al.
6,323,849	B1	11/2001	He et al.
6,344,861	B1	2/2002	Naughton et al.
6,347,290	B1	2/2002	Bartlett
6,377,009	B1	4/2002	Philipp
6,380,931	B1	4/2002	Gillespie et al.
6,411,287	B1	6/2002	Scharff et al.
6,414,671	B1	7/2002	Gillespie et al.
6,421,234	B1	7/2002	Ricks et al.
6,452,514	B1	9/2002	Philipp
6,457,355	B1	10/2002	Philipp
6,466,036	B1	10/2002	Philipp
6,515,669	B1	2/2003	Mohri
6,525,749	B1	2/2003	Moran et al.
6,535,200	B2	3/2003	Philipp
6,543,684	B1	4/2003	White et al.
6,543,947	B2	4/2003	Lee
6,570,557	B1	5/2003	Westerman et al.
6,593,916	B1	7/2003	Aroyan
6,610,936	B2	8/2003	Gillespie et al.
6,624,833	B1	9/2003	Kumar et al.
6,639,577	B2	10/2003	Eberhard
6,650,319	B1	11/2003	Hurst et al.
6,658,994	B1	12/2003	McMillan
6,670,894	B2	12/2003	Mehring
6,677,932	B1	1/2004	Westerman
6,677,934	B1	1/2004	Blanchard
6,724,366	B2	4/2004	Crawford
6,757,002	B1	6/2004	Oross et al.
6,803,906	B1	10/2004	Morrison et al.
6,842,672	B1	1/2005	Straub et al.
6,856,259	B1	2/2005	Sharp
6,888,536	B2	5/2005	Westerman et al.
6,900,795	B1	5/2005	Knight, III et al.
6,927,761	B2	8/2005	Badaye et al.
6,942,571	B1	9/2005	McAllister et al.
6,965,375	B1	11/2005	Gettemy et al.
6,972,401	B2	12/2005	Akitt et al.
6,977,666	B1	12/2005	Hedrick
6,985,801	B1	1/2006	Straub et al.
6,992,659	B2	1/2006	Gettemy
7,031,228	B2	4/2006	Born et al.
7,084,859	B1	8/2006	Pryor
7,129,416	B1	10/2006	Steinfeld et al.
7,240,289	B2	7/2007	Naughton et al.
RE40,153	E	3/2008	Westerman et al.
7,339,580	B2	3/2008	Westerman et al.
2002/0118848	A1	8/2002	Karpenstein
2002/0140668	A1	10/2002	Crawford
2003/0006974	A1	1/2003	Clough et al.
2003/0076301	A1	4/2003	Tsuk et al.
2003/0076303	A1	4/2003	Huppi
2003/0076306	A1	4/2003	Zadesky et al.
2003/0095095	A1	5/2003	Pihlaja
2003/0095096	A1	5/2003	Robbin et al.
2003/0098858	A1	5/2003	Perski et al.
2003/0132950	A1	7/2003	Surucu et al.
2003/0164820	A1	9/2003	Kent
2003/0206202	A1	11/2003	Moriya
2003/0234768	A1	12/2003	Rekimoto et al.
2004/0146688	A1	7/2004	Treat
2004/0263484	A1	12/2004	Montysalo et al.
2005/0012723	A1	1/2005	Pallakoff
2005/0052425	A1	3/2005	Zadeski et al.
2005/0104867	A1	5/2005	Westerman et al.
2005/0110768	A1	5/2005	Marriott et al.
2006/0022955	A1	2/2006	Kennedy
2006/0022956	A1	2/2006	Lengeling et al.
2006/0026521	A1	2/2006	Hotelling et al.
2006/0026535	A1	2/2006	Hotelling et al.
2006/0026536	A1	2/2006	Hotelling et al.
2006/0032680	A1	2/2006	Elias et al.
2006/0033724	A1	2/2006	Chaudhri et al.
2006/0053387	A1	3/2006	Ording
2006/0066582	A1	3/2006	Lyon et al.
2006/0085757	A1	4/2006	Andre et al.
2006/0097991	A1	5/2006	Hotelling et al.
2006/0197753	A1	9/2006	Hotelling
2006/0232567	A1	10/2006	Westerman et al.
2006/0238517	A1	10/2006	King et al.
2006/0238518	A1	10/2006	Westerman et al.
2006/0238519	A1	10/2006	Westerman et al.
2006/0238520	A1	10/2006	Westerman et al.
2006/0238521	A1	10/2006	Westerman et al.
2006/0238522	A1	10/2006	Westerman et al.
2007/0070050	A1	3/2007	Westerman et al.
2007/0070051	A1	3/2007	Westerman et al.
2007/0070052	A1	3/2007	Westerman et al.
2007/0078919	A1	4/2007	Westerman et al.
2007/0081726	A1	4/2007	Westerman et al.
2007/0229464	A1	10/2007	Hotelling et al.
2007/0236466	A1	10/2007	Hotelling
2007/0247429	A1	10/2007	Westerman
2007/0257890	A1	11/2007	Hotelling et al.
2007/0268273	A1	11/2007	Westerman et al.
2007/0268274	A1	11/2007	Westerman et al.
2007/0268275	A1	11/2007	Westerman et al.
2008/0041639	A1	2/2008	Westerman et al.
2008/0042986	A1	2/2008	Westerman et al.
2008/0042987	A1	2/2008	Westerman et al.
2008/0042988	A1	2/2008	Westerman et al.
2008/0042989	A1	2/2008	Westerman et al.
2008/0128182	A1	6/2008	Westerman et al.
2009/0021489	A1	1/2009	Westerman et al.
2009/0160816	A1	6/2009	Westerman et al.
2009/0244031	A1	10/2009	Westerman et al.
2009/0244032	A1	10/2009	Westerman et al.
2009/0244033	A1	10/2009	Westerman et al.
2009/0249236	A1	10/2009	Westerman et al.
2009/0251435	A1	10/2009	Westerman et al.
2009/0251438	A1	10/2009	Westerman et al.
2009/0251439	A1	10/2009	Westerman et al.

FOREIGN PATENT DOCUMENTS

DE	10251296	A1	5/2004
EP	0 546 704	A2	6/1993
EP	0 546 704	A3	6/1993
EP	0288692		7/1993
EP	0 622 722	A2	11/1994
EP	0 622 722	A3	11/1994
EP	0 622 722	B1	11/1994
EP	0664504		1/1995
EP	0464908		9/1996
EP	0 817 000	A1	1/1998
EP	0 817 000	B1	1/1998
EP	1014295		1/2002
GB	2330670	A	4/1999
JP	02-056017	A	2/1990
JP	02-304613	A	12/1990
JP	04-233619	A	8/1992
JP	06-083523	A	3/1994
JP	06-332620	A	12/1994
JP	07-057103	A	3/1995
JP	07-129312	A	5/1995
JP	08-286830	A	11/1996
JP	2000-163031	A	6/2000
WO	WO-92/02000		2/1992
WO	WO-96/07981	A1	3/1996
WO	WO-97/18547		5/1997
WO	WO-97/23738		7/1997
WO	WO-97/36225		10/1997
WO	WO-97/40744		11/1997
WO	WO-98/14863		4/1998
WO	WO-99/38149	A1	7/1999
WO	WO-03/088176		10/2003

Copy provided by USPTO from the PIRS Image Database on 04/05/2011

WO WO2006/023569 3/2006

OTHER PUBLICATIONS

Crowley, J.L. (Mar. 1, 1997). "Vision for Man-Machine Interaction," *Robotics and Autonomous Systems*, 19(3-4):347-358.
Davis, J. et al. (May 2, 1994). "Recognizing Hand Gestures," *European Conference on Computer Vision*, Stockholm, SE, 1:331-340.
European Search Report mailed Dec. 12, 2008, for EP Application No. 06016855.6 filed Jan. 25, 1999, six pages.
European Search Report mailed Dec. 23, 2008, for EP Application No. 06016831.7 filed Jan. 25, 1999, seven pages.
European Search Report mailed Jan. 9, 2009, for EP Application No. 06016832.5 filed Jan. 25, 1999, four pages.
Heap, T. et al. (Oct. 14, 1996). "Towards 3D Hand Tracking Using a Deformable Model," *Proceedings of the 2nd International Conference*, Killington, VT, USA, Oct. 14-16, 1996, *Automatic Face and Gesture Recognition, IEEE Comput. Soc.*, pp. 140-145.
International Search Report mailed Dec. 28, 2005, for PCT Application No. PCT/US05/03325, filed Feb. 3, 2005, two pages.
Nirei, K. et al. (Aug. 5, 1996). "Human Hand Tracking from Binocular Image Sequences," *Proceedings of the 1996 IEEE IECON 22nd International Conference, Taipei, Taiwan, Aug. 5-10, 1996, Industrial Electronics, Control, and Instrumentation* 1(5):297-302.
Non-Final Office Action mailed Sep. 21, 2007, for U.S. Appl. No. 11/428,515, filed Jul. 3, 2006, seven pages.
Non-Final Office Action mailed Sep. 24, 2007, for U.S. Appl. No. 11/428,506, filed Jul. 3, 2006, six pages.
Non-Final Office Action mailed Sep. 24, 2007, for U.S. Appl. No. 11/428,521, filed Jul. 3, 2006, six pages.
Non-Final Office Action mailed Jan. 28, 2008, for U.S. Appl. No. 11/428,522, filed Jul. 3, 2006, seven pages.
Non-Final Office Action mailed Feb. 4, 2008, for U.S. Appl. No. 11/428,515, filed Jul. 3, 2006, six pages.
Non-Final Office Action mailed Jul. 9, 2008, for U.S. Appl. No. 11/428,521, filed Jul. 3, 2006, 11 pages.
Non-Final Office Action mailed Sep. 2, 2008, for U.S. Appl. No. 11/428,522, filed Jul. 3, 2006, six pages.
Non-Final Office Action mailed Sep. 15, 2008, for U.S. Appl. No. 11/428,506, filed Jul. 3, 2006, eight pages.
Non-Final Office Action mailed Oct. 31, 2008, for U.S. Appl. No. 11/428,515, filed Jul. 3, 2006, seven pages.
Non-Final Office Action mailed Feb. 17, 2009, for U.S. Appl. No. 11/428,522, filed Jul. 3, 2006, six pages.
Notice of Allowability mailed Feb. 11, 2009, for U.S. Appl. No. 11/428,521, filed Jul. 3, 2006, five pages.
U.S. Appl. No. 11/332,861, filed Jan. 13, 2006 which is a Reissue of 6,677,932.
Westerman, W. (Jan. 1, 1999). "Hand Tracking, Finger Identification, and Chordic Manipulation on a Multi-Touch Surface," Dissertation, University of Delaware, pp. 1-333.
Final Office Action mailed Mar. 19, 2009, for U.S. Appl. No. 11/428,506, filed Jul. 3, 2006, seven pages.
Non-Final Office Action mailed Mar. 18, 2009, for U.S. Appl. No. 11/428,515, filed Jul. 3, 2006, 12 pages.
Non-Final Office Action mailed Apr. 2, 2009, for U.S. Appl. No. 11/428,501, filed Jul. 3, 2006, 11 pages.
Non-Final Office Action mailed Apr. 2, 2009, for U.S. Appl. No. 11/428,503, filed Jul. 3, 2006, 12 pages.
Notice of Allowability mailed Jul. 10, 2009, for U.S. Appl. No. 11/428,521, filed Jul. 3, 2006, four pages.
Rubine, D. (May 1992). "Combining Gestures and Direct Manipulation," CHI '92, pp. 659-660.
U.S. Appl. No. 12/342,027, filed Dec. 22, 2008, by Westerman et al.
U.S. Appl. No. 12/422,197, filed Apr. 10, 2009, by Westerman et al.
U.S. Appl. No. 12/422,205, filed Apr. 10, 2009, by Westerman et al.
U.S. Appl. No. 12/422,212, filed Apr. 10, 2009, by Westerman et al.
U.S. Appl. No. 12/422,222, filed Apr. 10, 2009, by Westerman et al.
U.S. Appl. No. 12/422,225, filed Apr. 10, 2009, by Westerman et al.
U.S. Appl. No. 12/434,439, filed May 1, 2009, by Westerman et al.
U.S. Appl. No. 12/479,573, filed Jun. 5, 2009, by Westerman et al.
U.S. Appl. No. 12/479,617, filed Jun. 5, 2009, by Westerman et al.
U.S. Appl. No. 12/479,678, filed Jun. 5, 2009, by Westerman et al.
Cui, Y. et al. (1996). "Hand Segmentation Using Learning-Based Prediction and Verification for Hand Sign Recognition," *Proceedings of the 1996 IEEE Computer Society Conference on Computer Vision and Pattern Recognition*, pp. 88-93.
Final Office Action mailed Nov. 19, 2009, for U.S. Appl. No. 11/428,515, filed Jul. 3, 2006, 14 pages.
Non-Final Office Action mailed Aug. 25, 2009, for U.S. Appl. No. 11/428,522, filed Jul. 3, 2006, six pages.
Non-Final Office Action mailed Sep. 2, 2009, for U.S. Appl. No. 11/559,736, filed Nov. 14, 2006, 12 pages.
Non-Final Office Action mailed Oct. 5, 2009, for U.S. Appl. No. 11/559,799, filed Nov. 14, 2006, 14 pages.
Non-Final Office Action mailed Oct. 6, 2009, for U.S. Appl. No. 11/559,763, filed Nov. 14, 2006, 24 pages.
Non-Final Office Action mailed Oct. 14, 2009, for U.S. Appl. No. 11/428,501, filed Jul. 3, 2006, six pages.
Non-Final Office Action mailed Oct. 29, 2009, for U.S. Appl. No. 11/559,822, filed Nov. 14, 2006, 11 pages.
Non-Final Office Action mailed Oct. 30, 2009, for U.S. Appl. No. 11/428,503, filed Jul. 3, 2006, nine pages.
Non-Final Office Action mailed Dec. 22, 2009, for U.S. Appl. No. 11/559,833, filed Nov. 14, 2006, six pages.
Non-Final Office Action mailed Jan. 27, 2010, for U.S. Appl. No. 11/428,522, filed Jul. 3, 2006, five pages.
Notice of Allowability mailed Sep. 2, 2009, for U.S. Appl. No. 11/428,506, filed Jul. 3, 2006, five pages.
Rubine, D.H. (Dec. 1991). "The Automatic Recognition of Gestures," CMU-CS-91-202, Submitted in Partial Fulfillment of the Requirements of the Degree of Doctor of Philosophy in Computer Science at Carnegie Mellon University, 285 pages.
U.S. Appl. No. 10/654,108, filed Sep. 2, 2003 entitled "Ambidextrous Mouse".
U.S. Appl. No. 10/789,676, filed Feb. 27, 2004 entitled "Shape Detecting Input Device".
"4-Wire Resistive Touchscreens" obtained from http://www.touchscreens.com/intro-touchtypes-4resistive.html generated Aug. 5, 2005.
"5-Wire Resistive Touchscreens" obtained from http://www.touchscreens.com/intro-touchtypes-resistive.html generated Aug. 5, 2005.
"A Brief Overview of Gesture Recognition" obtained from http://www.dai.ed.ac.uk/Cvonline/LOCA_COPIES/COHEN/gesture_overview.html, generated Apr. 20, 2004.
"Capacitive Touchscreens" obtained from http://www.touchscreens.com/intro-touchtypes-capacitive.html generated Aug. 5, 2005.
"Capacitive Position Sensing" obtained from http://www.synaptics.com/technology/cps.cfm generated Aug. 5, 2005.
"Comparing Touch Technologies" obtained from http://www.touchscreens.com/intro-touchtypes.html generated Oct. 10, 2004.
"GlidePoint®" obtained from http://www.cirque.com/technology/technology_gp.html generated Aug. 5, 2005.
"How do touchscreen monitors know where you're touching?" obtained from http://www.electronics.howstuffworks.com/question716.html generated Aug. 5, 2005.
"How does a touchscreen work?" obtained from http://www.touchscreens.com/intro-anatomy.html generated Aug. 5, 2005.
"Infrared Touchscreens" obtained from http://www.touchscreens.com/intro-touchtypes-infrared.html generated Aug. 5, 2005.
"Mouse Emulation" FingerWorks obtained from http://www.fingerworks.com/gesture_guide_mouse.html generated Aug. 30, 2005.
"Mouse Gestures in Opera" obtained from http://www.opera.com/products/desktop/mouse/index.dml generated Aug. 30, 2005.
"Mouse Gestures," Optim oz, May 21, 2004.
"MultiTouch Overview" FingerWorks obtained from http://www.fingerworks.com/multoverview.html generated Aug. 30, 2005.
"Near Field Imaging Touchscreens" obtained from http://www.touchscreens.com/intro-touchtypes-nfi.html generated Aug. 5, 2005.
"PenTouch Capacitive Touchscreens" obtained from http://www.touchscreens.com/intro-touchtypes-pentouch.html generated Aug. 5, 2005.

Copy provided by USPTO from the PIRS Image Database on 04/25/2011

"Surface Acoustic Wave Touchscreens" obtained from http://www.touchscreens.com/intro-touchtypes-saw.html generated Aug. 5, 2005.
"Symbol Commander" obtained from http://www.sensiva.com/symbolcomander/, generated Aug. 30, 2005.
"Tips for Typing" FingerWorks http://www.fingerworks.com/mini_typing.html generated Aug. 30, 2005.
"Touch Technologies Overview" 2001, 3M Touch Systems, Massachusetts.
"Wacom Components—Technology" obtained from http://www.wacom-components.com/english/tech.asp generated on Oct. 10, 2004.
"Watershed Algorithm" http://rsb.info.nih.gov/ij/plugins/watershed.html generated Aug. 5, 2005.
"FingerWorks—Gesture Guide—Application Switching," obtained from http://www.fingerworks.com/gesture_guide_apps.html, generated on Aug. 27, 2004, 1-pg.
"FingerWorks—Gesture Guide—Editing," obtained from http://www.fingerworks.com/gesure_guide_editing.html, generated on Aug. 27, 2004, 1-pg.
"FingerWorks—Gesture Guide—File Operations," obtained from http://www.fingerworks.com/gesture_guide_files.html, generated on Aug. 27, 2004, 1-pg.
"FingerWorks—Gesture Guide—Text Manipulation," obtained from http://www.fingerworks.com/gesture_guide_text_manip.html, generated on Aug. 27, 2004, 2-pg.
"FingerWorks—Gesture Guide—Tips and Tricks," obtained from http://www.fingerworks.com/gesture_guide_tips.html, generated Aug. 27, 2004, 2-pgs.
"FingerWorks—Gesture Guide—Web," obtained from http://www.fingerworks.com/gesture_guide_web.html, generated on Aug. 27, 2004, 1-pg.
"FingerWorks—Guide to Hand Gestures for USB Touchpads," obtained from http://www.fingerworks.com/igesture_userguide.html, generated Aug. 27, 2004, 1-pg.
"FingerWorks—iGesture—Technical Details," obtained from http://www.fingerworks.com/igesture_tech.html, generated Aug. 27, 2004, 1-pg.
"FingerWorks—The Only Touchpads with Ergonomic Full-Hand Resting and Relaxation!" obtained from http://www.fingerworks.com/resting.html, Copyright 2001, 1-pg.
"FingerWorks—Tips for Typing on the Mini," obtained from http://www.fingerworks.com/mini_typing.html, generated on Aug. 27, 2004, 2-pgs.
"iGesture Pad—the MultiFinger USB TouchPad with Whole-Hand Gestures," obtained from http://www.fingerworks.com/igesture.html, generated Aug. 27, 2004, 2-pgs.
Bier, et al., "Toolglass and Magic Lenses: The see-through interface" In James Kijiya, editor, Computer Graphics (SIGGRAPH '93 Proceedings), vol. 27, pp. 73-80, Aug. 1993.
Buxton, W. et al. (Jul. 22, 1985). "Issues and Techniques in Touch-Sensitive Tablet Input," *Proceedings ACM Siggraph*, pp. 215-224.
Cutler, L.D. et al. (Apr. 27, 1997). "Two-Handed Direct Manipulation on the Responsive Workbench," *Proceedings of the 1997 Symposium on Interactive 3D Graphics*, Providence, RI, Apr. 27-30, 1997, pp. 107-114.
Davis, J. et al. (Oct. 31, 1994). "Determining 3-D Hand Motion," *Signals, Systems and Computers, 1994 Conference Record of the 28th Asilomar Conference on Pacific Grove*, CA, Oct. 31-Nov. 2, 1994, Los Alamitos, CA, pp. 1262-1266.
Douglas et al., The Ergonomics of Computer Pointing Devices (1997).
European Search Report received in EP 1 621 989 (@ *Beyer Weaver & Thomas, LLP*) dated Mar. 27, 2006.
EVB Elektronik "TSOP6238 IR Receiver Modules for Infrared Remote Control Systems" dated Jan. 2004 1-pg.
Fisher et al., "Repetitive Motion Disorders: The Design of Optimal Rate—Rest Profiles," Human Factors, 35(2):283-304 (Jun. 1993).
Fukumoto, et al., "ActiveClick: Tactile Feedback for Touch Panels," In CHI 2001 Summary, pp. 121-122, 2001.
Fukumoto and Yoshinobu Tonomura, "Body Coupled Fingering: Wireless Wearable Keyboard," *CHI 97*, pp. 147-154 (Mar. 1997).
Hardy, "Fingerworks" Mar. 7, 2002; BBC World On Line.
Hillier and Gerald J. Lieberman, *Introduction to Operations Research* (1986).
Jacob et al., "Integrality and Separability of Input Devices," *ACM Transactions on Computer-Human Interaction*, 1:3-26 (Mar. 1994).
Kinkley et al., "Touch-Sensing Input Devices," in CHI '99 Proceedings, pp. 223-230, 1999.
KIONX "KXP84 Series Summary Data Sheet" copyright 2005,dated Oct. 21, 2005, 4-pgs.
Lee et al., "A Multi-Touch Three Dimensional Touch-Sensitive Tablet," in CHI '85 Proceedings, pp. 121-128, 2000.
Lee, "A Fast Multiple-Touch-Sensitive Input Device," Master's Thesis, University of Toronto (1984).
Lee, S.K. et al. (Apr. 1985). "A Multi-Touch Three Dimensional Touch-Sensitive Tablet," *Proceedings of CHI: ACM Conference on Human Factors in Computing Systems*, pp. 21-25.
Matsushita et al., "HoloWall: Designing a Finger, Hand, Body and Object Sensitive Wall," In Proceedings of UIST '97, Oct. 1997.
Pavlovic, V.I. et al. (Jul. 1997). "Visual Interpretation of Hand Gestures for Human-Computer Interaction: A Review," *IEEE Transactions on Pattern Analysis and Machine Intelligence* 19(7):677-695.
Quantum Research Group "QT510 / QWheel™ Touch Slider IC" copyright 2004-2005, 14-pgs.
Quek, "Unencumbered Gestural Interaction," *IEEE Multimedia*, 3:36-47 (Winter 1996).
Radwin, "Activation Force and Travel Effects on Overexertion in Repetitive Key Tapping," *Human Factors*, 39(1):130-140 (Mar. 1997).
Rekimoto "SmartSkin: An Infrastructure for Freehand Manipulation on Interactive Surfaces" CHI 2002, Apr. 20-25, 2002.
Rekimoto et al., "ToolStone: Effective Use of the Physical Manipulation Vocabularies of Input Devices," In Proc. of UIST 2000, 2000.
Rubine et al., "Programmable Finger-Tracking Instrument Controllers," *Computer Music Journal*, vol. 14, No. 1 (Spring 1990).
Rutledge et al., "Force-To-Motion Functions for Pointing," Human-Computer Interaction—INTERACT (1990).
Subatai Ahmad, "A Usable Real-Time 3D Hand Tracker," Proceedings of the 28th Asilomar Conference on Signals, Systems and Computers—Part 2 (of2), vol. 2 (Oct. 1994).
Texas Instruments "TSC2003 / I2C Touch Screen Controller" Data Sheet SBAS 162, dated Oct. 2001, 20-pgs.
Wellner, "The Digital Desk Calculators: Tangible Manipulation on a Desk Top Display" In ACM UIST '91 Proceedings, pp. 27-34, Nov. 1991.
Williams, "Applications for a Switched-Capacitor Instrumentation Building Block" Linear Technology Application Note 3, Jul. 1985, pp. 1-16.
Yamada et al., "A Switched-Capacitor Interface for Capacitive Pressure Sensors" IEEE Transactions on Instrumentation and Measurement, vol. 41, No. 1, Feb. 1992, pp. 81-86.
Yeh et al., "Switched Capacitor Interface Circuit for Capacitive Transducers" 1985 IEEE.
Zhai et al., "Dual Stream Input for Pointing and Scrolling," *Proceedings of CHI '97 Extended Abstracts* (1997).
Zimmerman et al., "Applying Electric Field Sensing to Human-Computer Interfaces," In CHI '85 Proceedings, pp. 280-287, 1995.
International Search Report received in corresponding PCT application No. PCT/US2006/008349 dated Oct. 6, 2006.
International search report for PCT/US99/01454, mailed May 14, 1999.
European supplementary search report for European Patent Application No. 99904228.6, mailed Feb. 16, 2005.
Supplementary European search report for U.S. Appl. No. 99904228.6, mailed Jul. 8, 2005.
European examination report for European patent Application No. 99904228.6, mailed Apr. 20, 2006.
European examination report for European Patent Application No. 99904228.6, mailed Mar. 23, 2007.
Extended European search report for European Patent Application No. 06016858.0, mailed Dec. 21, 2007.
Extended European search report for European Patent Application No. 06016856.4, mailed Mar. 14, 2008.
European examination report for European Patent Application No. 06016830.9, mailed Aug. 6, 2008.

Copy provided by USPTO from the PIRS Image Database on 04/25/2011

European search report for European Patent Application No. 06016830.9 mailed Dec. 3, 2007.
European examination report for European Patent Application No. 06016856.4 mailed Sep. 16, 2008.
Notice of Allowance mailed Mar. 23, 2010, for U.S. Appl. No. 11/428,501, filed Jul. 3, 2006, eight pages.
European Search Report mailed Feb. 17, 2010, for EP Application No. 06016857.2, six pages.
European Search Report mailed Feb. 24, 2010, for EP Application No. 06016833.3, nine pages.
Sun Microsystems. (1992). "The Star7 PDA Prototype," located at <http://www.youtube.com/watch?v=Ahg8OBYixL0, last visited Jan. 15, 2010, seven pages.
Tomita, A. Jr. et al. (Nov. 9, 1997). "An Image Processing Method for Use in a GUI for the Visually Impaired," *Proceedings of the IECON '97: 23rd International Conference on Industrial Electronics, Control and Instrumentation*, New Orleans, LA, Nov. 9-14, 1997, pp. 264-268.

* cited by examiner

Copy provided by USPTO from the PIRS Image Database on 04/25/2011

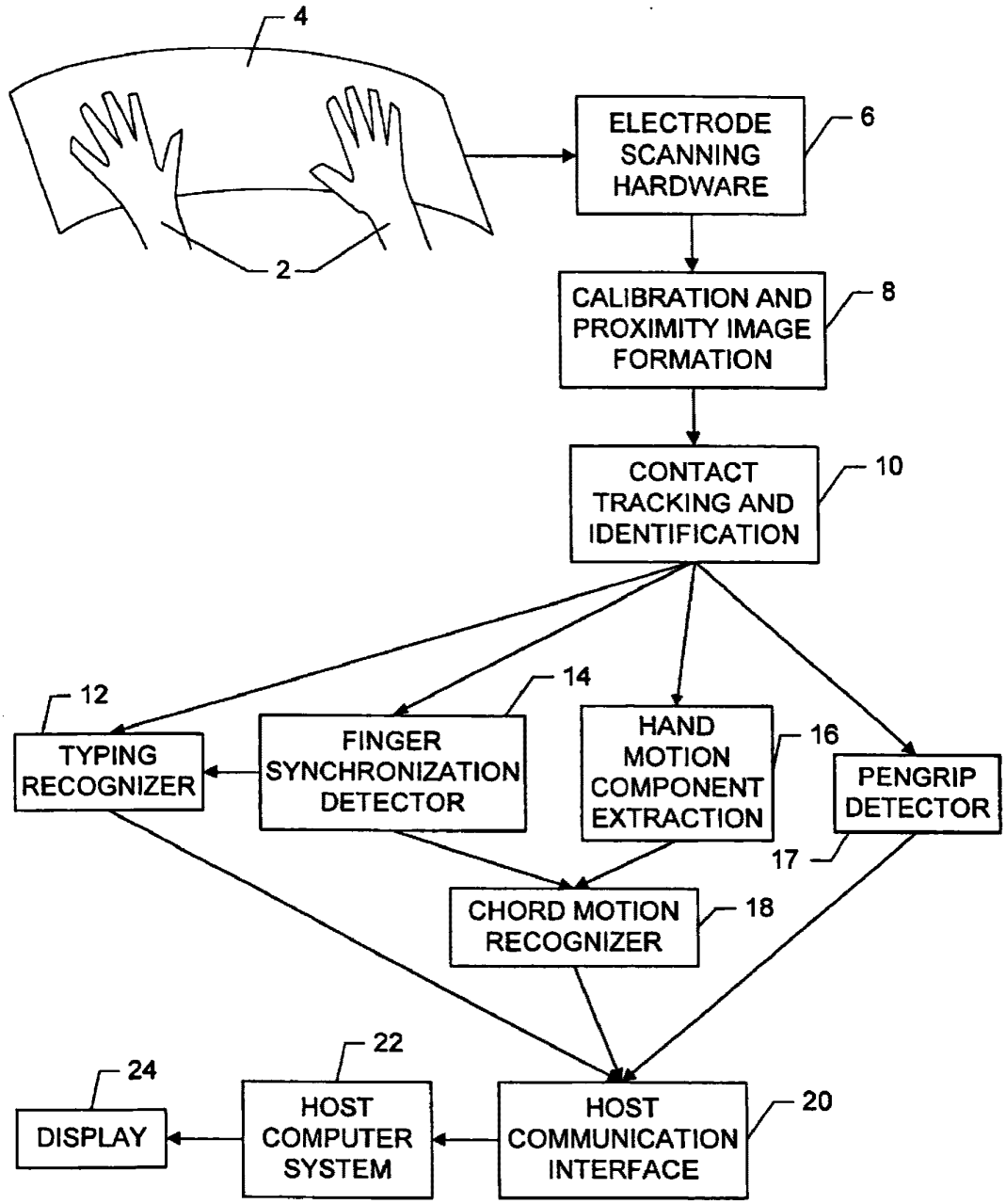

FIG. 1

Copy provided by USPTO from the PIRS Image Database on 04/25/2011

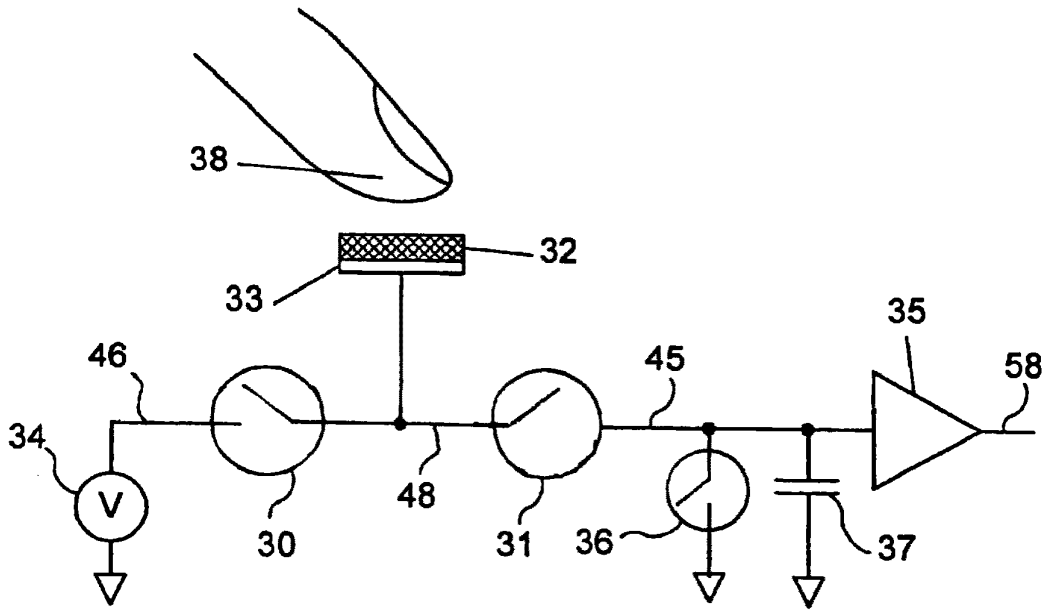

FIG. 2

Copy provided by USPTO from the PIRS Image Database on 04/25/2011

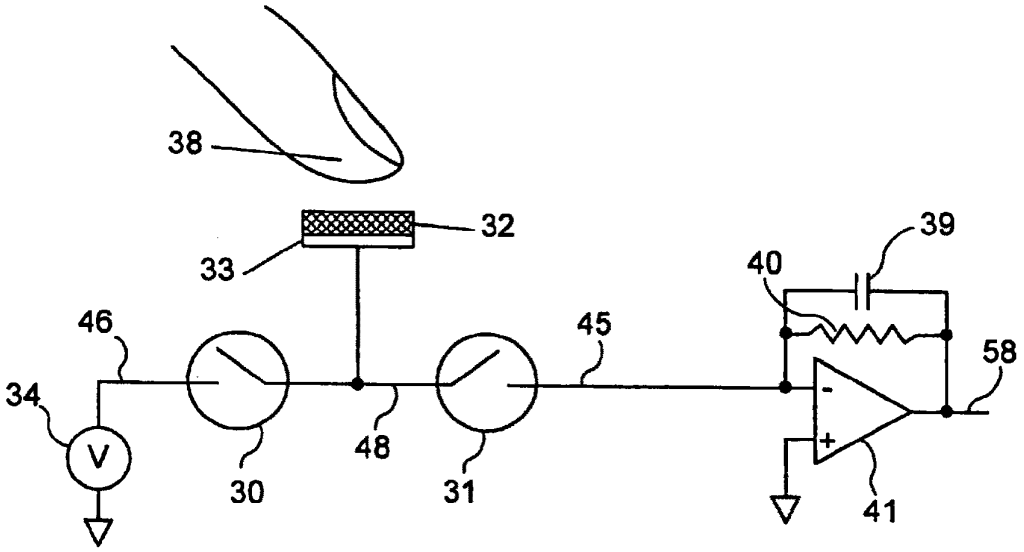

FIG. 3A

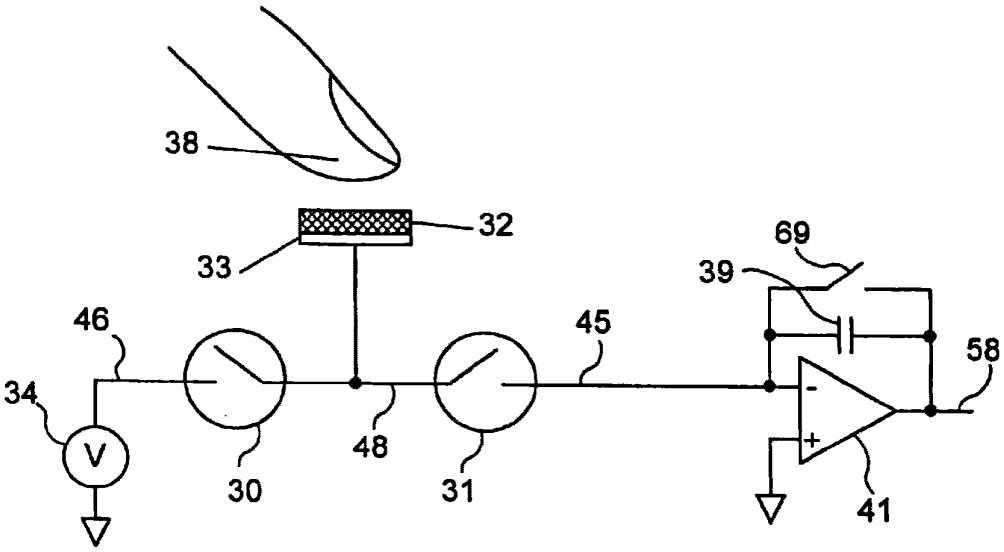

FIG. 3B

Copy provided by USPTO from the PIRS Image Database on 04/25/2011

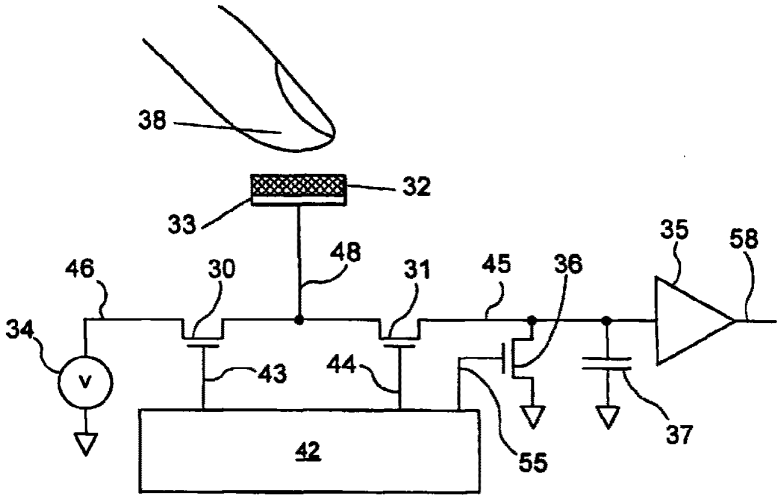

FIG. 4A

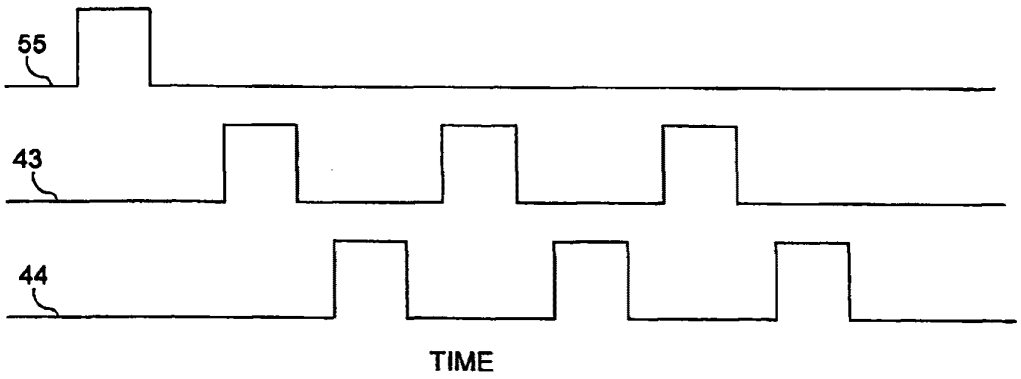

FIG. 4B

Copy provided by USPTO from the PIRS Image Database on 04/25/2011

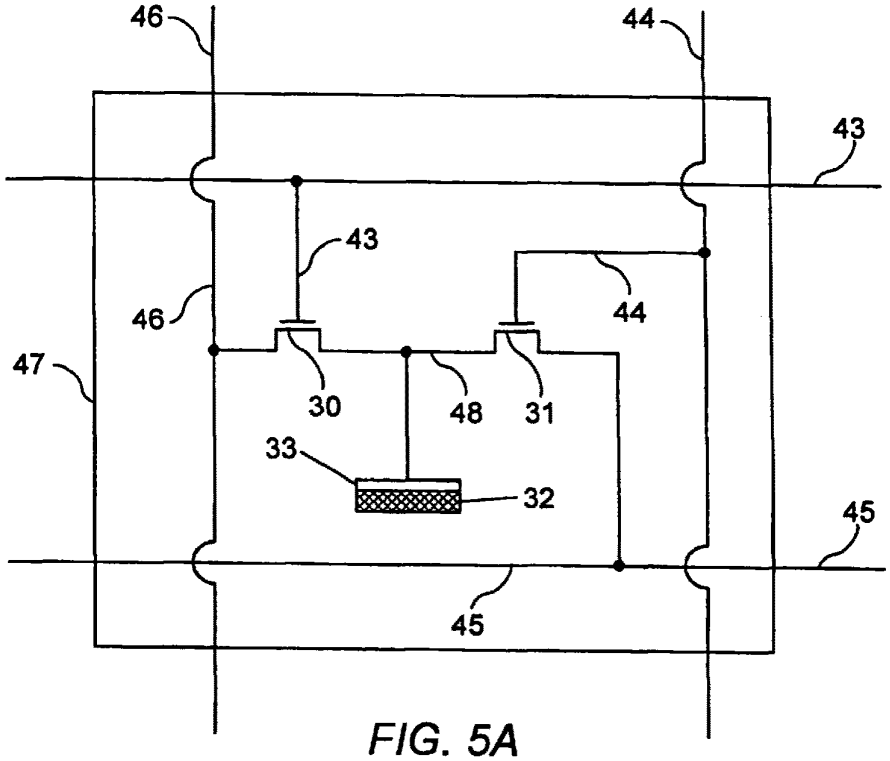

FIG. 5A

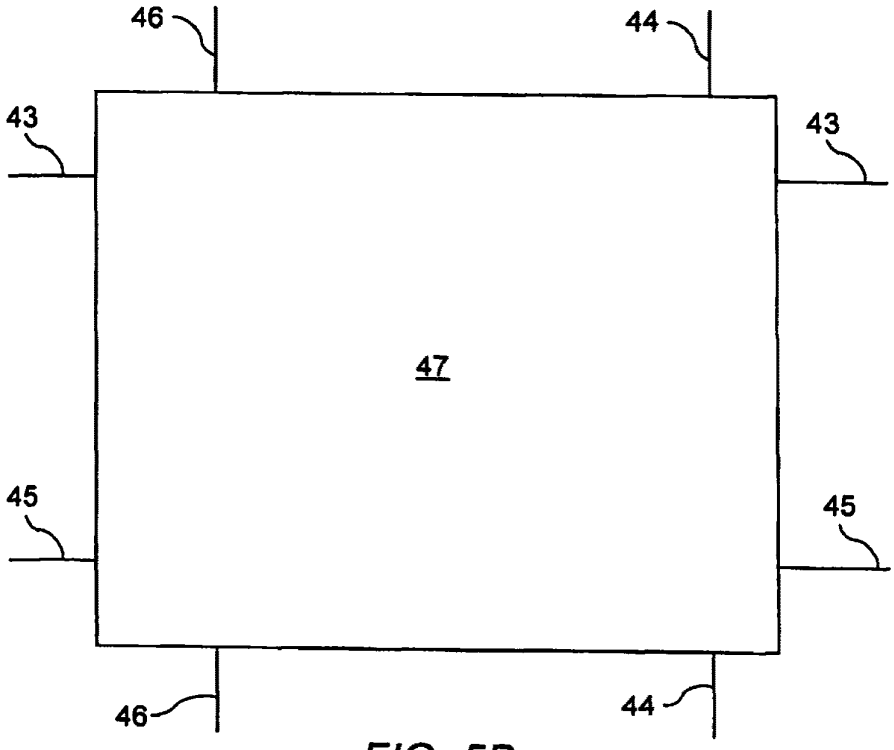

FIG. 5B

Copy provided by USPTO from the PIRS Image Database on 04/25/2011

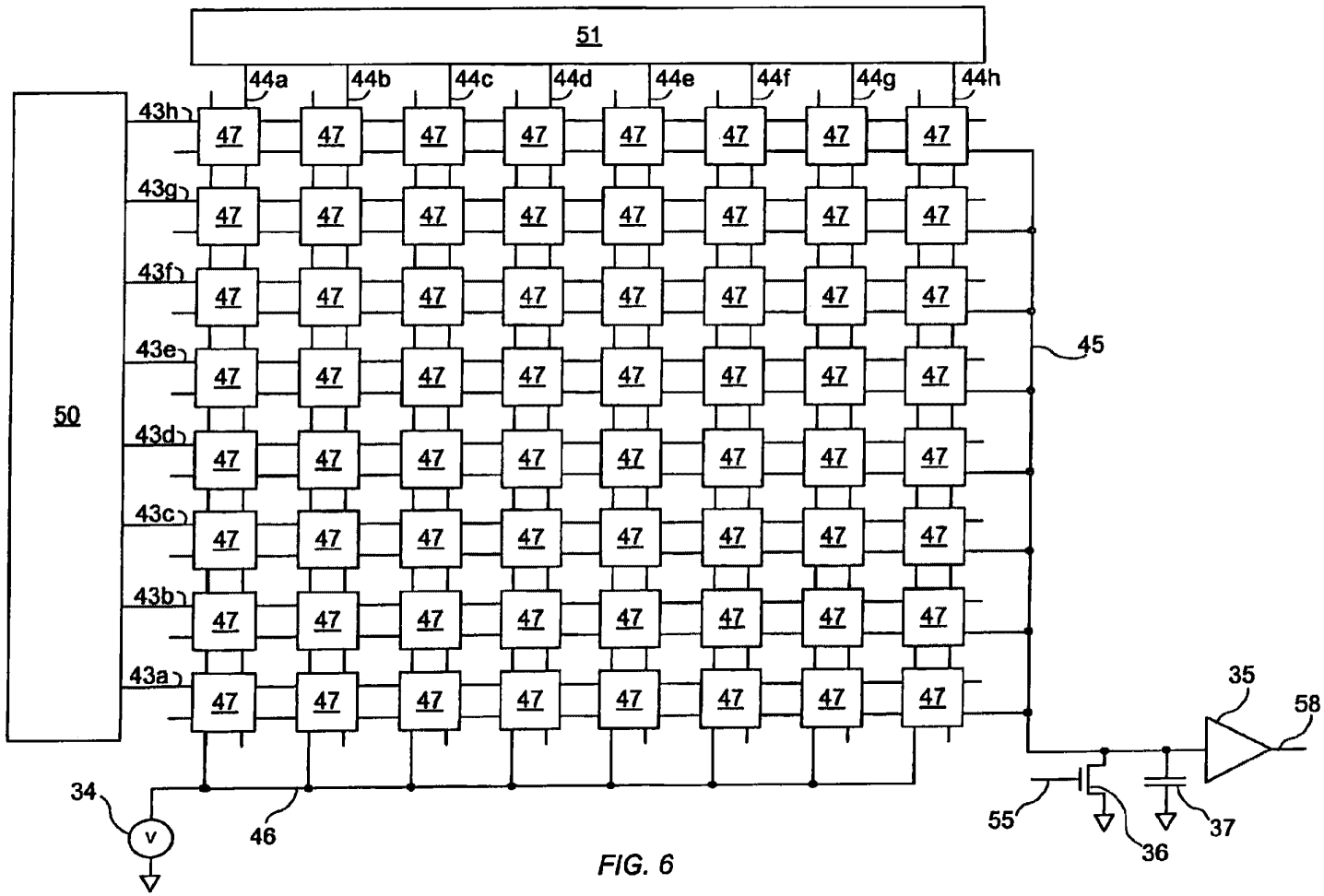

FIG. 6

Copy provided by USPTO from the PIRS Image Database on 04/25/2011

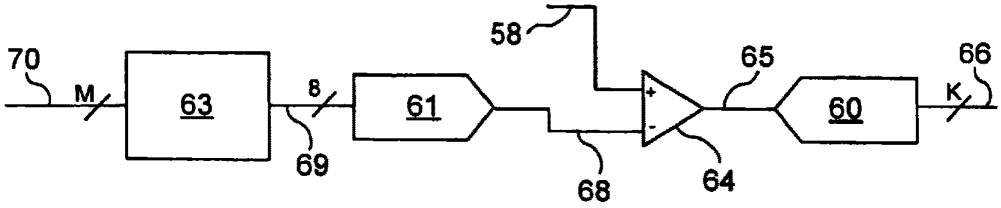

FIG. 7A

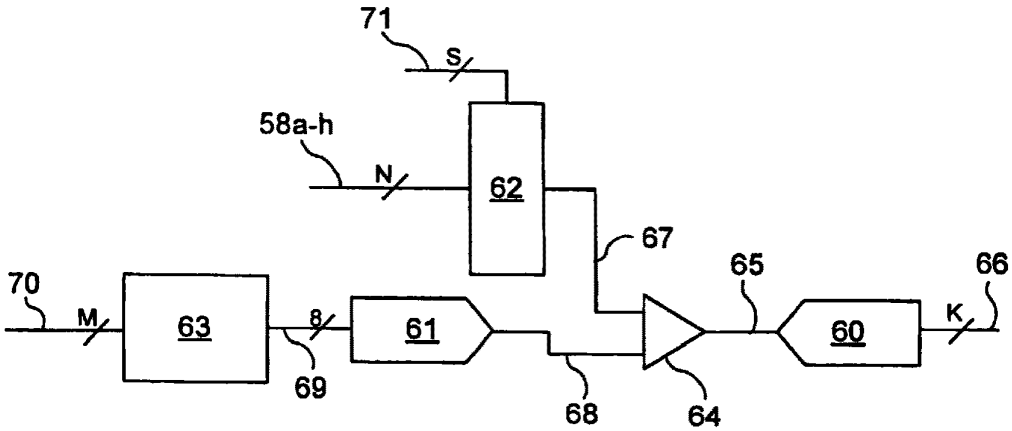

FIG. 7B

Copy provided by USPTO from the PIRS Image Database on 04/25/2011

APLNDC00030340

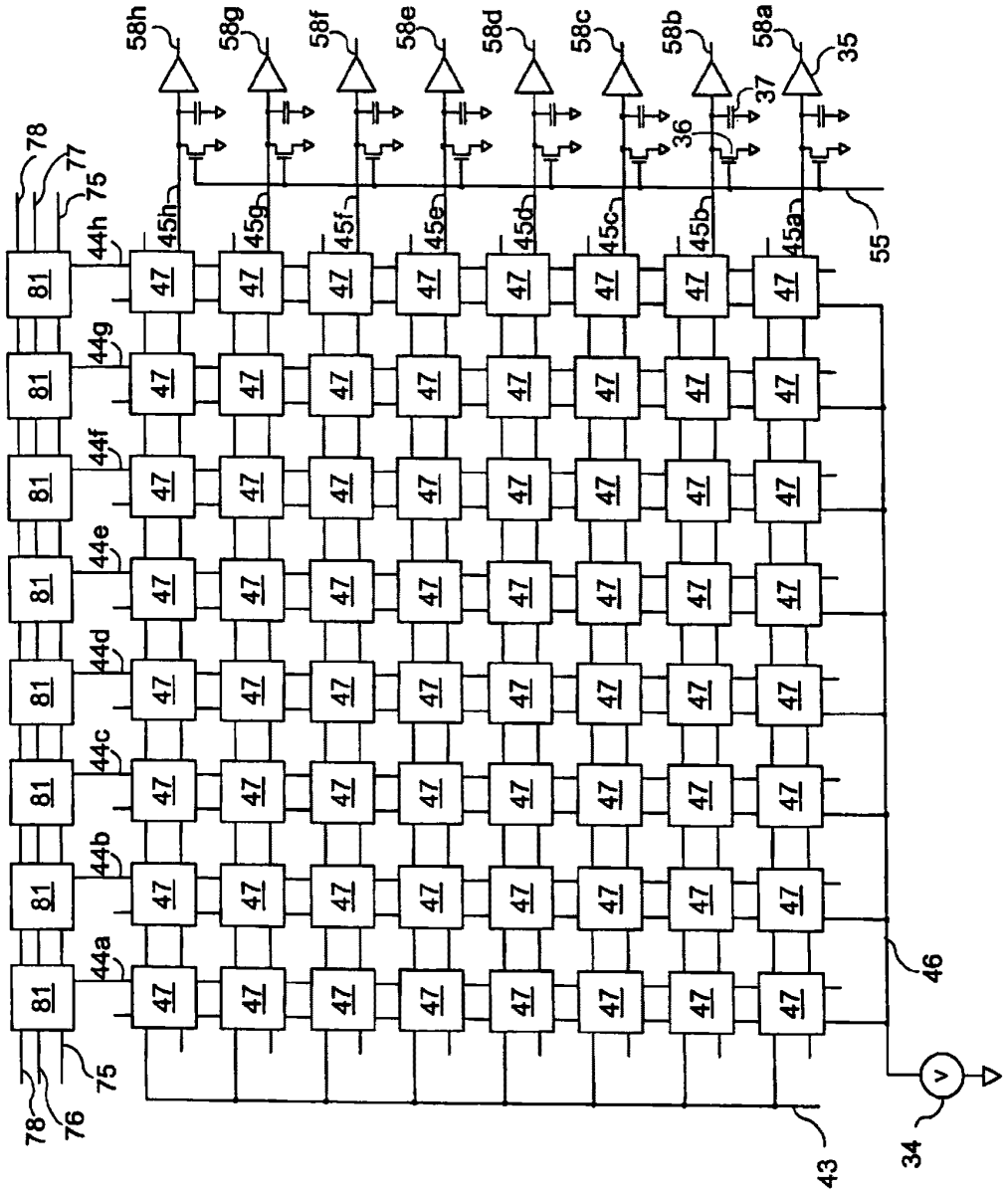

FIG. 8

Copy provided by USPTO from the PIRS Image Database on 04/25/2011

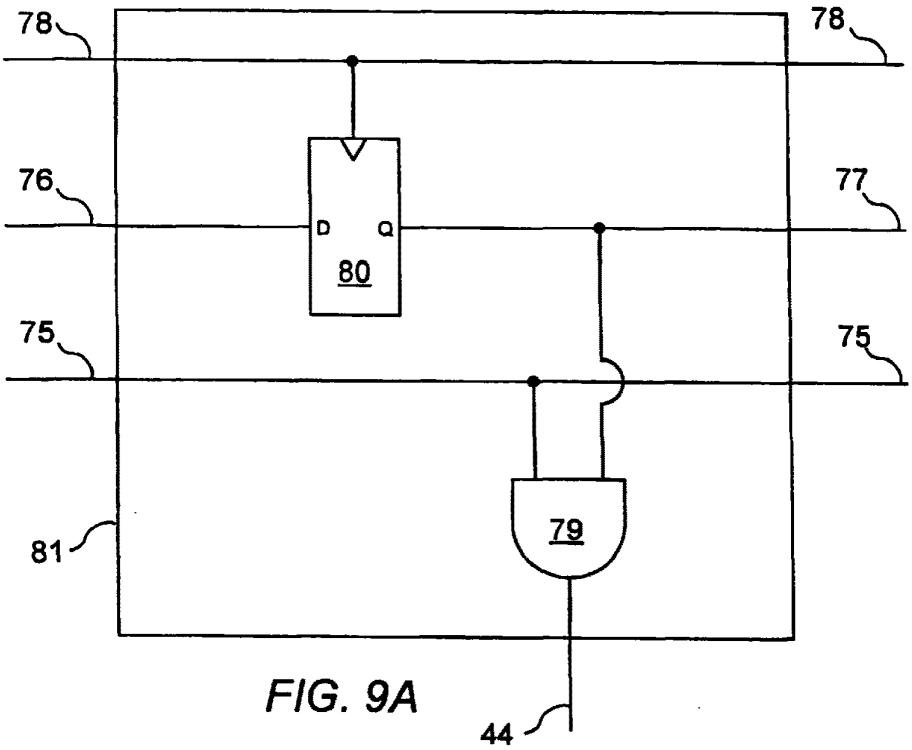

FIG. 9A

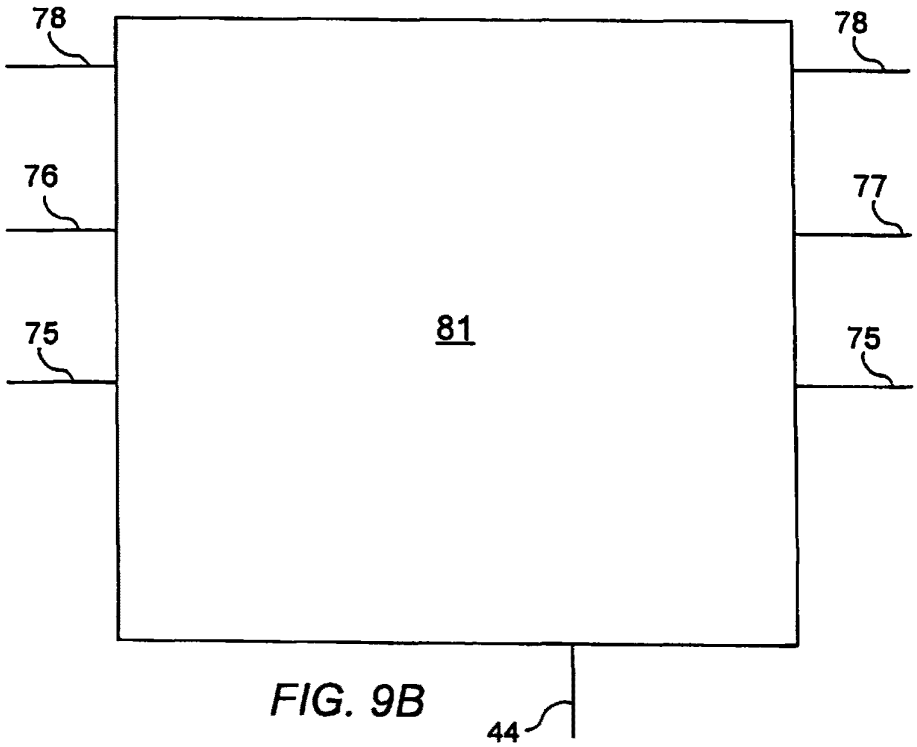

FIG. 9B

Copy provided by USPTO from the PIRS Image Database on 04/25/2011

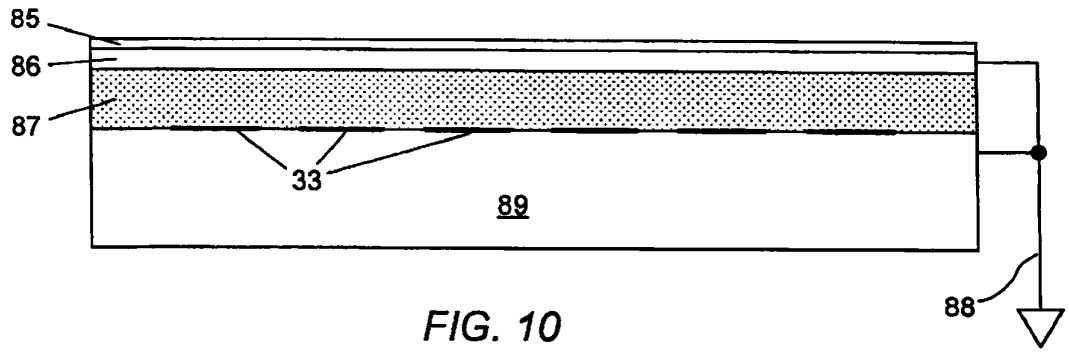

FIG. 10

Copy provided by USPTO from the PIRS Image Database on 04/25/2011

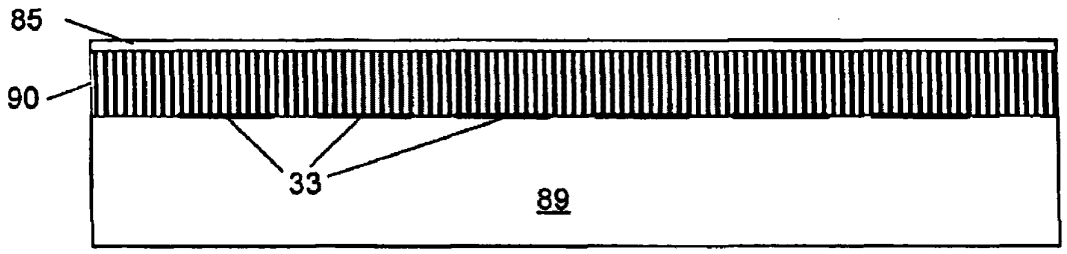

FIG. 11

Copy provided by USPTO from the PIRS Image Database on 04/25/2011

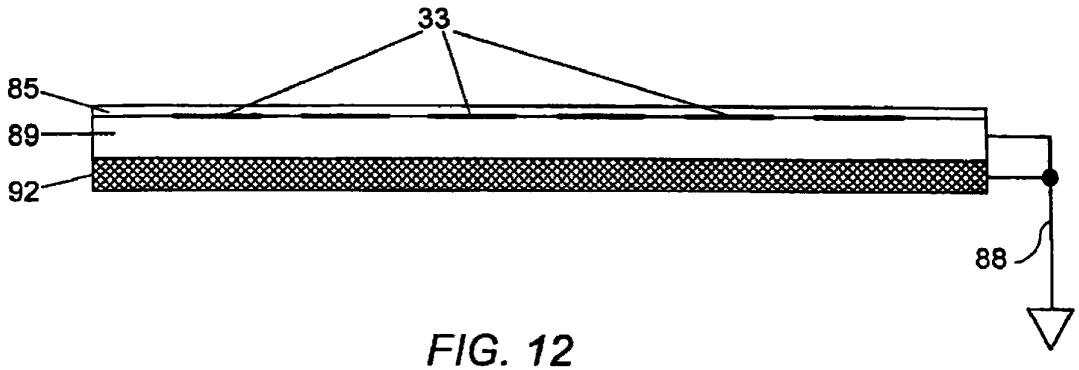

FIG. 12

Copy provided by USPTO from the PIPS Image Database on 04/25/2011

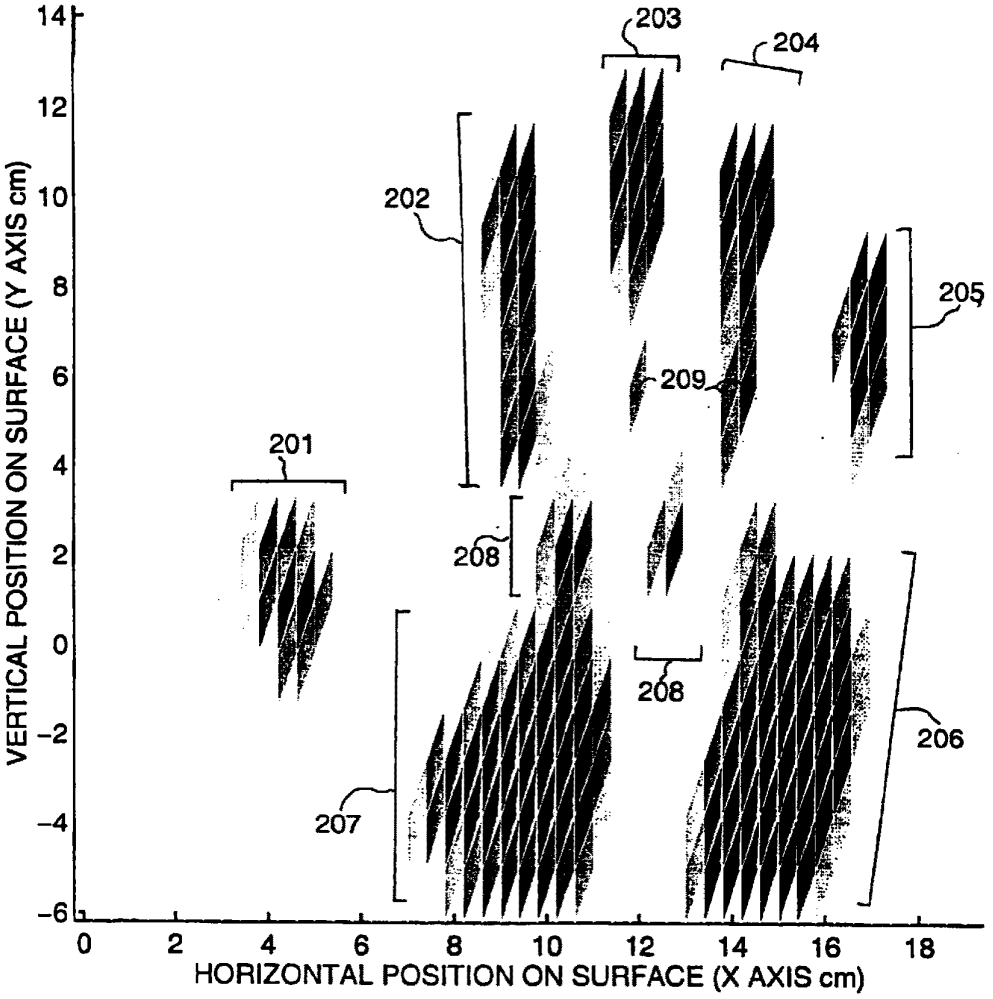

FIG. 13

Copy provided by USPTO from the PIRS Image Database on 04/25/2011

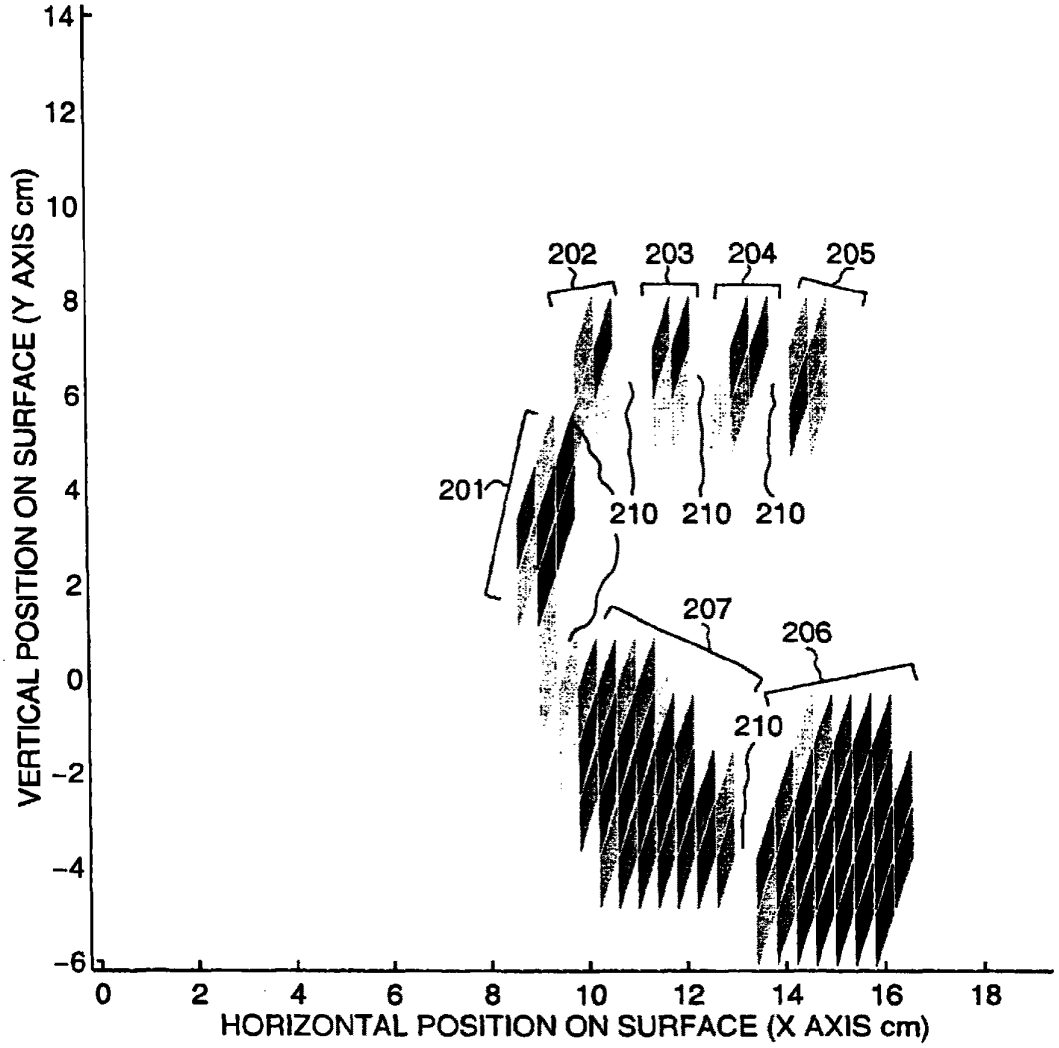

FIG. 14

Copy provided by USPTO from the PIRS Image Database on 04/25/2011

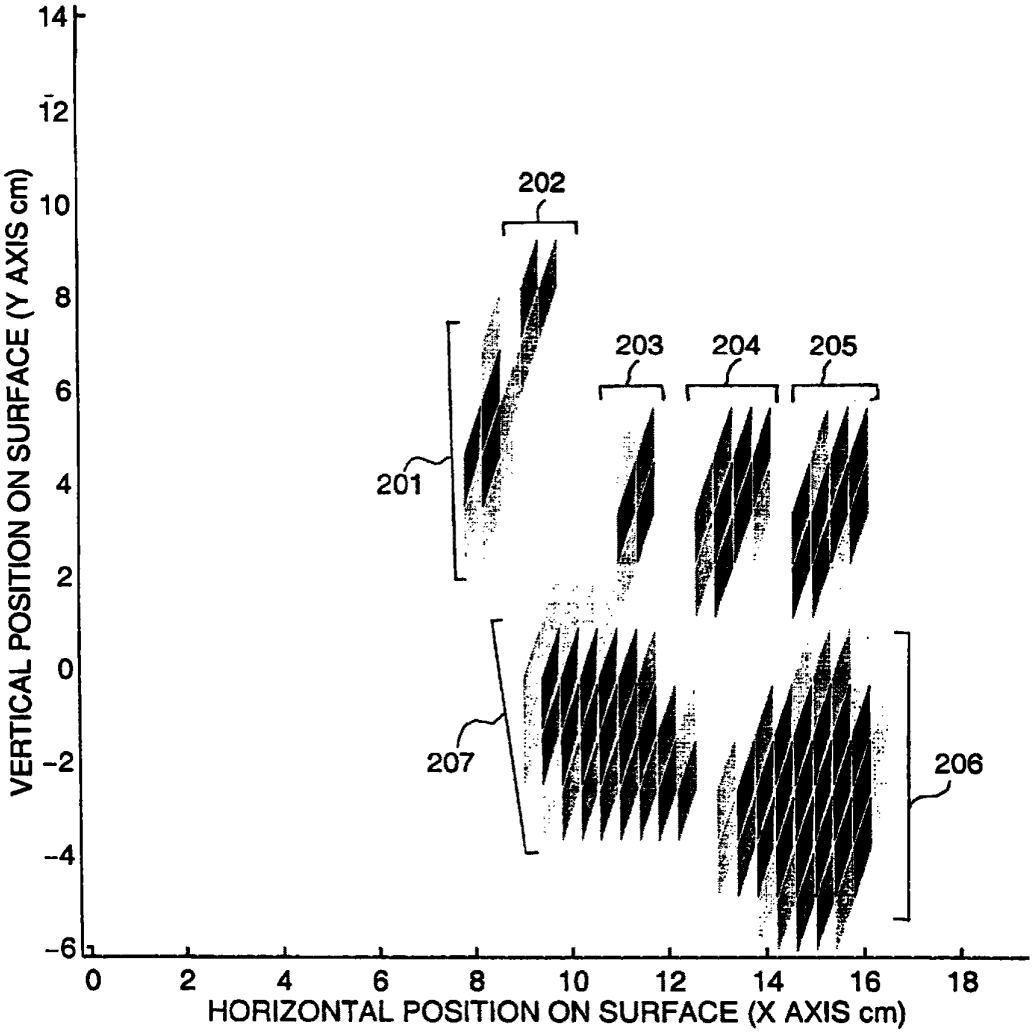

FIG. 15

Copy provided by USPTO from the PIRS Image Database on 04/25/2011

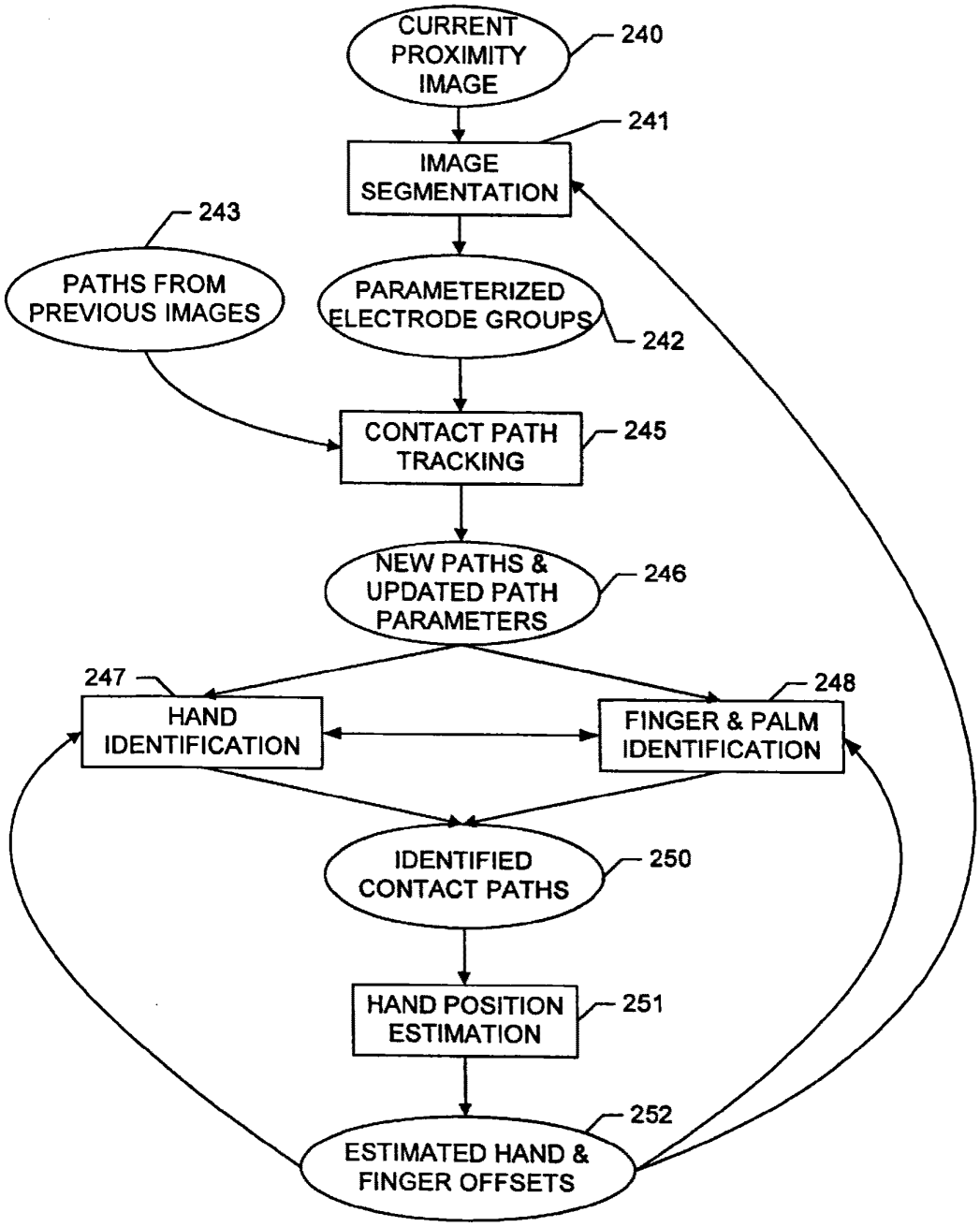

FIG. 16

Copy provided by USPTO from the PIRS Image Database on 04/25/2011

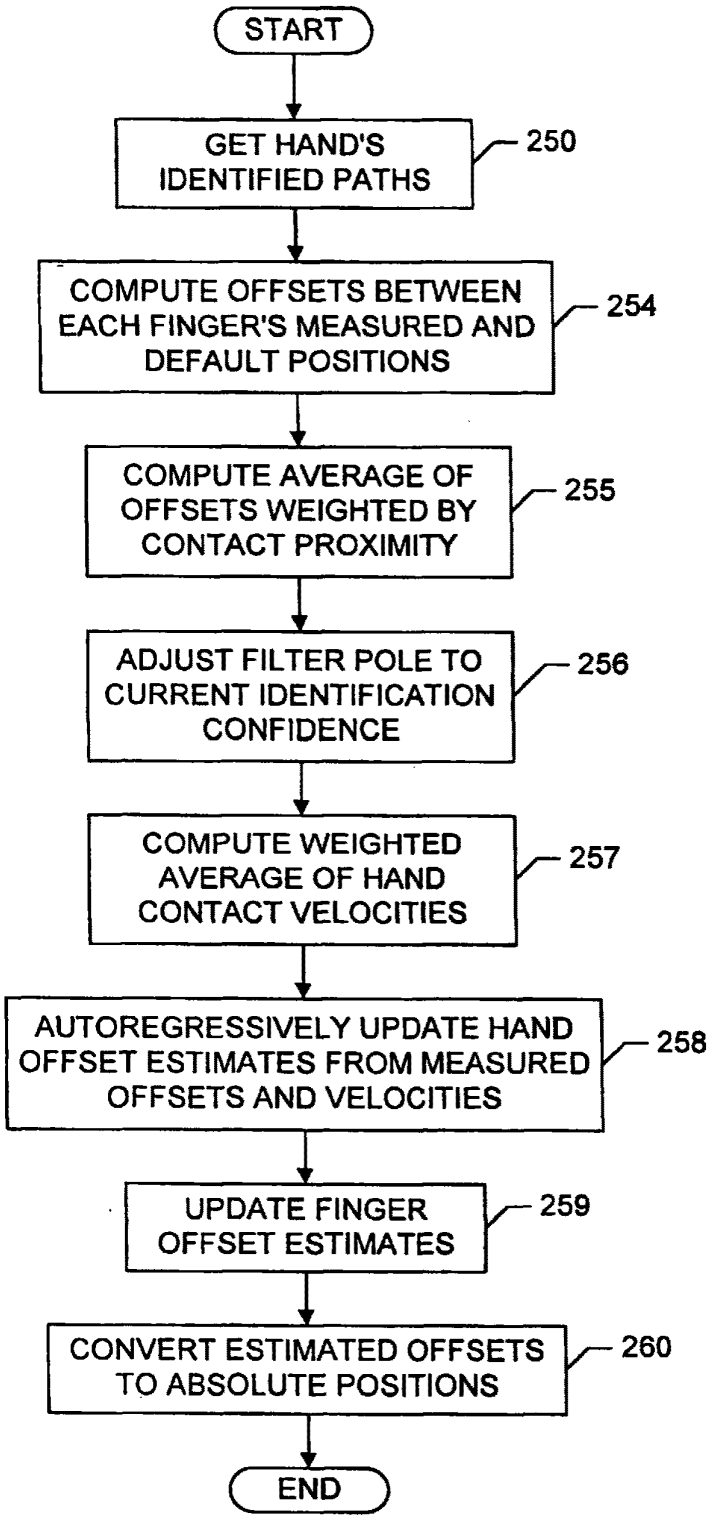

FIG. 17

Copy provided by USPTO from the PIRS Image Database on 04/25/2011

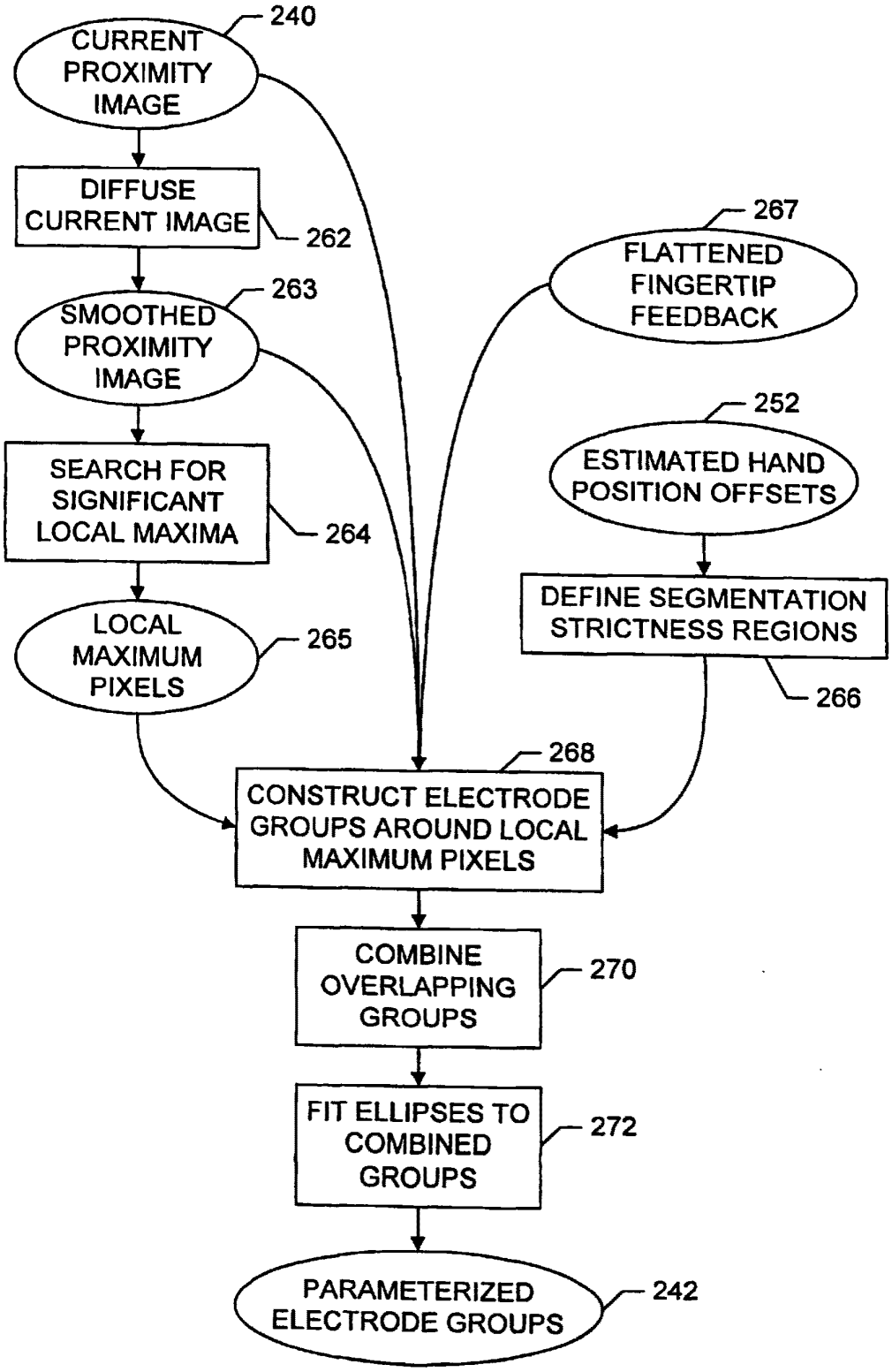

FIG. 18

Copy provided by USPTO from the PIRS Image Database on 04/25/2011

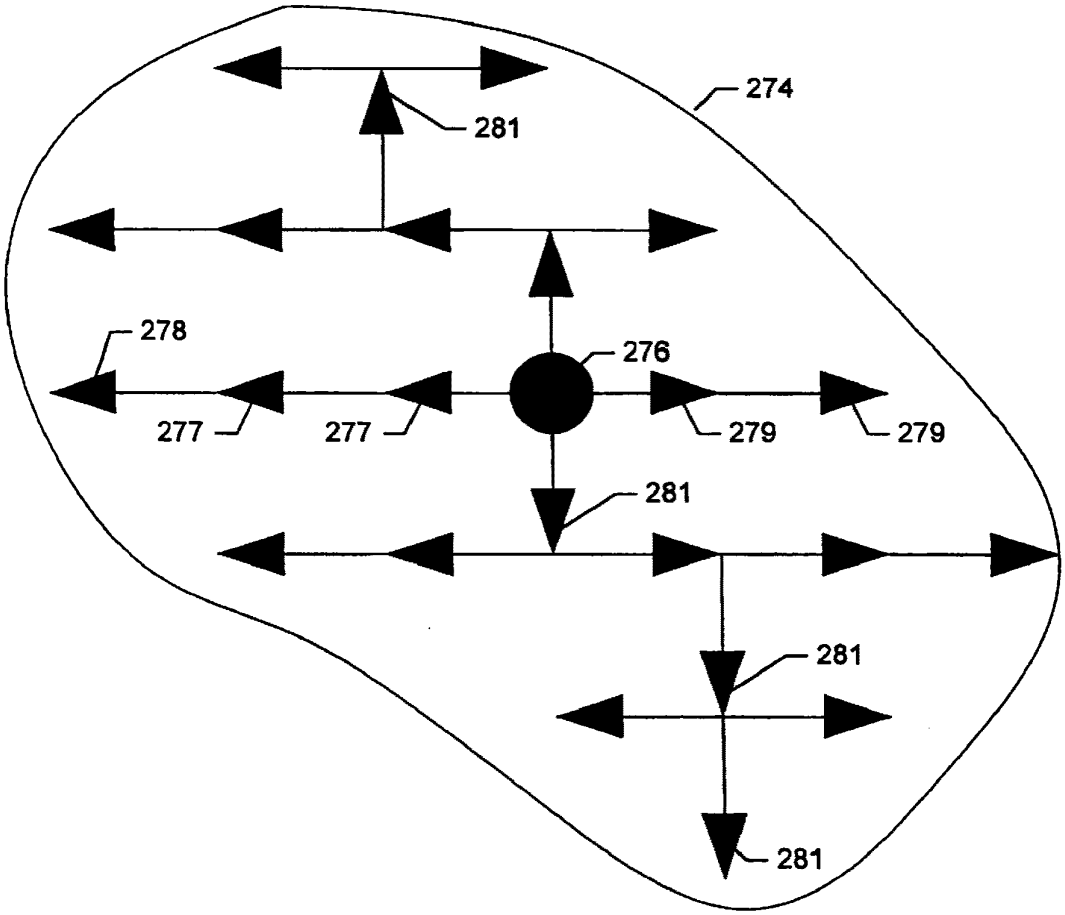

FIG. 19

Copy provided by USPTO from the PIRS Image Database on 04/25/2011

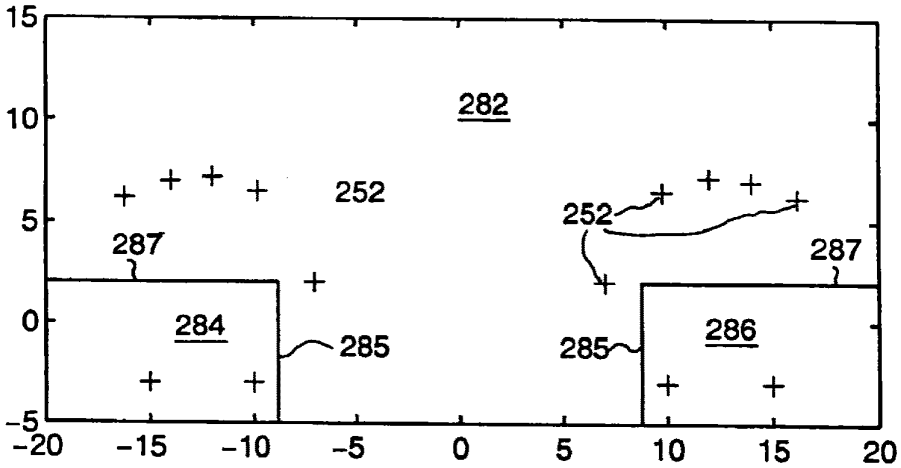

FIG. 20A

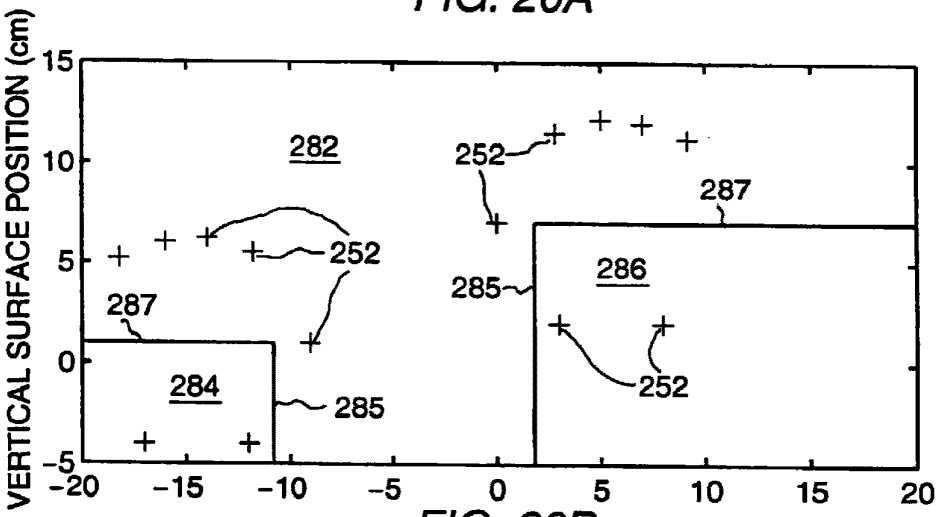

FIG. 20B

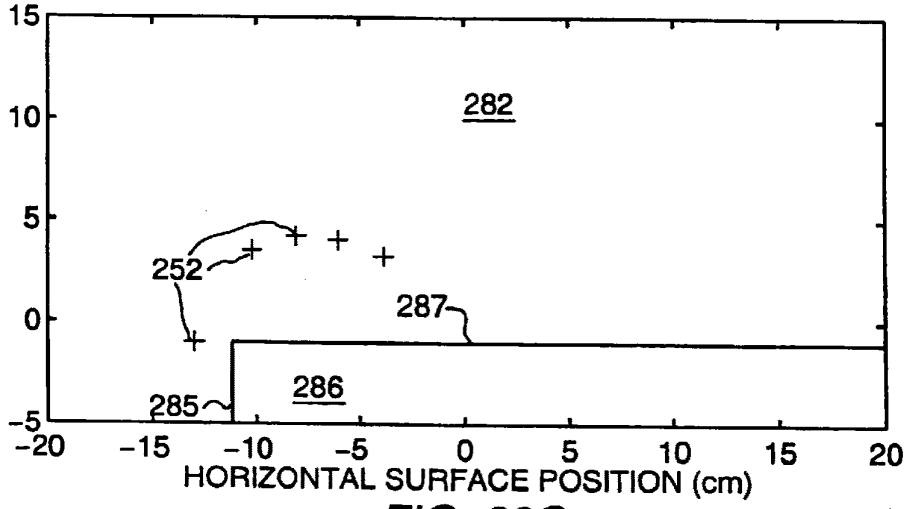

FIG. 20C

Copy provided by USPTO from the PIRS Image Database on 04/25/2011

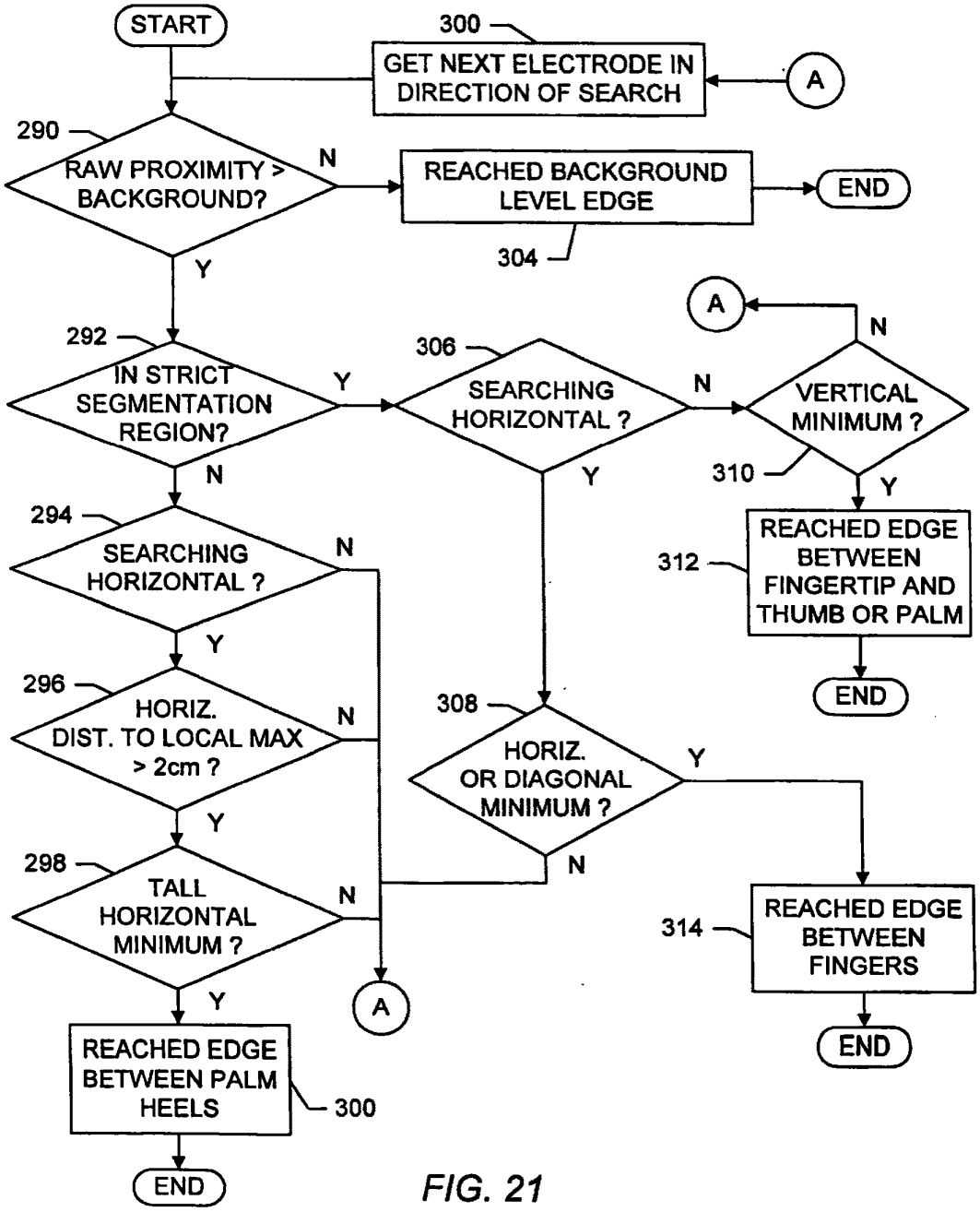

FIG. 21

Copy provided by USPTO from the PIRS Image Database on 04/25/2011

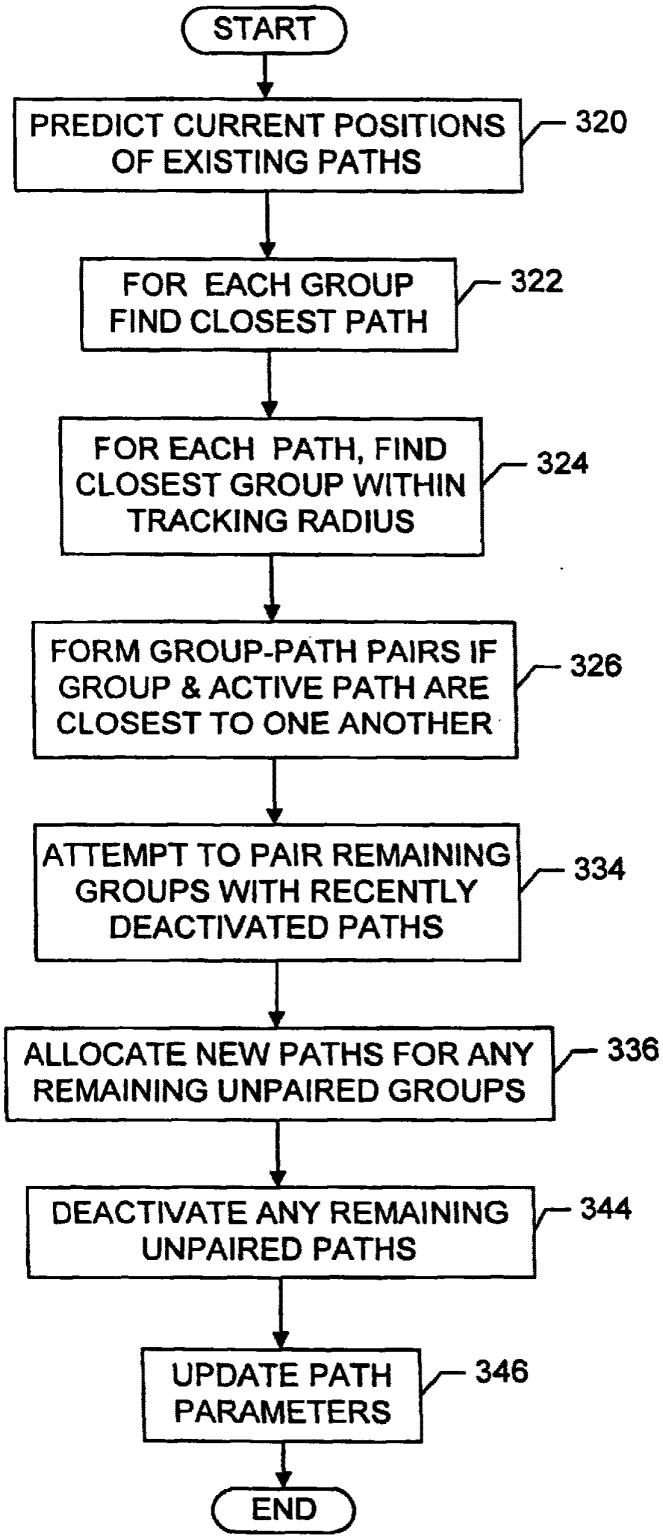
START
PREDICT CURRENT POSITIONS OF EXISTING PATHS
320
FOR EACH GROUP FIND CLOSEST PATH
322
FOR EACH PATH, FIND CLOSEST GROUP WITHIN TRACKING RADIUS
324
FORM GROUP-PATH PAIRS IF GROUP & ACTIVE PATH ARE CLOSEST TO ONE ANOTHER
326
ATTEMPT TO PAIR REMAINING GROUPS WITH RECENTLY DEACTIVATED PATHS
334
ALLOCATE NEW PATHS FOR ANY REMAINING UNPAIRED GROUPS
336
DEACTIVATE ANY REMAINING UNPAIRED PATHS
344
UPDATE PATH PARAMETERS
346
END

FIG. 22