AMERICAN SOCIETY FOR TESTING AND MATERIALS et al v. PUBLIC.RESOURCE.ORG, INC. Doc. 198 Att. 6

EXHIBIT 1

Dockets.Justia.com

1967 BOOK OF ASTM STANDARDS

With Related Material

Reg. U.S. Pat. Off.

PART 24

Textile Materials—Yarns, Fabrics, and General Methods

Includes standards of:

Committee D-13 on Textile Materials

A list of committee members may be found in the ASTM Year Book.

Issued Annually in October

Price $12.00; 30 per cent discount to members

Published by the

AMERICAN SOCIETY FOR TESTING AND MATERIALS

1916 Race St., Philadelphia, Pa. 19103

54-37

TA401
.A653

ASTM

THE American Society for Testing and Materials is an international, nonprofit, technical, scientific, and educational society devoted to "... the promotion of knowledge of the materials of engineering, and the standardization of specifications and methods of testing."

Since 1898, the Society, mainly through the activities of technical committees, has conducted a vast amount of investigation and research leading to a better knowledge of the properties of materials and the development of more than 3900 standards for materials. These standards are used throughout the world by industry, government, architects, and engineers in specifying and evaluating materials of all kinds. They are applied in design, manufacturing, construction, and maintenance.

More than 100 main technical committees (some 2500 committees including all subcommittees and sections) function in prescribed fields under regulations that ensure a balanced representation of producers, consumers, and general interest groups. Current committee activities cover materials in the fields of aerospace, atomic energy, surgical implants, housing and construction, highways, heavy industry, and durable consumer goods.

The standards developed by the committees and the hundreds of technical papers and reports presented at Society meetings are published and widely distributed.

The world-wide membership is drawn from a broad spectrum of individuals, agencies, and industries concerned with materials. More than 13,900 members include 10,100 individual engineers, scientists, researchers, educators, and testing experts; 1200 governmental agencies and departments (federal, state, and municipal), educational institutions, and libraries; and 2600 companies, associations, research institutes, and testing laboratories. In addition, about 8000 other individuals, though not personally members of the Society, serve as technical experts representing industrial members on committees.

A cordial invitation to become affiliated as members in the Society is extended to individuals and organizations who are concerned with the fields of work in which ASTM is active or who would find it of interest and benefit to keep in close touch with the work of the Society. Information on membership is given on the application forms bound in the back of this book. For further information, contact ASTM Headquarters, 1916 Race St., Philadelphia, Pa. 19103.

The appearance of the Book of ASTM Standards is a tribute to the sincere efforts of the technical committees responsible for the development and review of the standards, and of the many individuals serving on the committees. The committees responsible for developing the standards appearing in this part are listed on the title page. The names of persons serving on these committees and the organizations they represent are listed in the ASTM Year Book which is published annually. Because of their contribution, personal recognition would be justified. However, this list is too extensive and covers too many fields of interest to include as part of this volume.

© By American Society for Testing and Materials 1967
Library of Congress Catalog Card Number: 40-10712

Printed in Baltimore, U.S.A.
October, 1967

C55-98

ABP
GIFT
PUBLISHER

Report

.1 State that the tests were made as cted in ASTM Method D 1295 and rt the average warp and filling (or n necessary, warp-face, warp-back, g-face and filling-back) recovery es. If both normal and high-humid- itmospheres have been used, report sets of average values.

Precision

.1 Results of interlaboratory tests e shown significant differences in veen-laboratory precision.

.2 Using three specimens for each p, as prescribed in the method, the in-laboratory precision of the aver- for warp or filling, as measured by variance, has ranged from a low of a high of 140 deg squared. A vari- of under 40 deg squared is consid- satisfactory.

.3 When the within-laboratory pre- n is satisfactory, different labora- s will rank a group of fabrics in the e order, even though they differ in absolute values obtained. Results, efore, can be used to make decisions confidence about the relative quality everal fabrics. The method, however, not be recommended for acceptance ng.

61-97 X

Standard Method of Test for

TUFT BIND OF PILE FLOOR COVERINGS[1]

ASTM Designation: D 1335 – 67

This Standard of the American Society for Testing and Materials is issued under the fixed designation D 1335; the number immediately following the designation indicates the year of original adoption or, in the case of revision, the year of last revision. A number in parentheses indicates the year of last reapproval.

1. Scope

1.1 This method covers the determination of the force required to pull a tuft completely out of a cut pile floor covering or to pull one or both legs of a loop free from the backing of looped pile floor covering.

NOTE 1—For the determination of other properties of pile floor coverings refer to ASTM Methods D 418, Testing Woven Pile Floor Coverings[2] and ASTM Methods D 1486, Testing Tufted Pile Floor Coverings.[2]

2. Definitions

2.1 *Tuft, n.*—The cut or uncut loops forming the face of a tufted or woven pile floor covering.

2.2 *Tuft Bind, n.*—The force required to pull a tuft from a cut pile floor covering or to pull free one leg of a loop from a looped pile floor covering.

NOTE 2—The force is generally expressed in pounds-force.

2.3 *Pile Floor Covering, n.*—A pile fabric intended for use as a floor covering. The pile may be in the form of cut loops or loops, or both. Both the cut loops and the loops may vary in height.

2.4 *Looped Pile Floor Covering, n.*—A pile floor covering in which the pile is composed of loops.

2.5 *Cut Pile Floor Covering, n.*—A pile floor covering in which the pile is composed of tufts in the form of cut loops.

2.6 For definitions of other terms used in this method, refer to ASTM Definitions D 123, Terms Relating to Textile Materials.[2]

3. Summary of Method

3.1 The force required to pull a cut loop from a cut pile floor covering or to pull one or both legs of a loop from a looped pile floor covering is determined by a tensile testing machine. The required load or force is reported in pounds-force (lbf) or kilograms-force (kgf).

4. Uses and Significance

4.1 The satisfactory performance of a pile floor covering depends to a considerable extent on the maintenance of its original appearance. In a cut pile floor

[1] Under the standardization procedure of the Society, this method is under the jurisdiction of the ASTM Committee D-13 on Textile Materials, and is the direct responsibility of Subcommittee A-11 on Pile Floor Coverings. A list of committee members may be found in the ASTM Year Book.

Current edition accepted Sept. 8, 1967. Originally issued 1954. Replaces D 1335 – 60 T.

[2] Appears in this publication.

covering an inadequate tuft bind may result in complete loss of pile in areas exposed to severe wear. In a looped pile floor covering with inadequate tuft bind the pile loops may be pulled out to form unsightly long tufts or occasionally hazardous loops.

4.2 The wide range of capacity of tensile testing machines is specified to cover the application of the method to intermediate products (without back coating) which might have a tuft bind of less than 1 lb and also to cover the use of the method when it is desired to determine

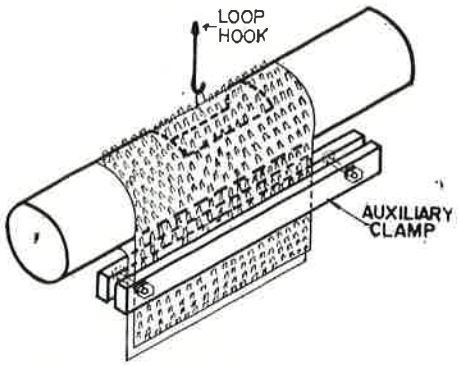

FIG. 1—Specimen Holder, Cut-Away Type.

that the tuft bind exceeds a specified value of 3 to 4 lb, for example, without taking the time to pull the tuft out completely.

4.3 In cases when a floor covering contains both cut and uncut pile, an equal number of each type of pile should be tested.

5. Apparatus

5.1 *Tensile Testing Machine*, conforming to ASTM Specifications D 76, for Tensile Testing Machines for Textile Materials,[2] with a capacity selected such that the force required to complete the test falls within 20 to 80 per cent of full scale. Full scale loads ranging from 1 to 25 lb (0.5 to 11 kg) are generally adequate. The testing machines must be operable at the specified rates; for constant-rate-of-traverse (CRT) and constant-rate-of-extension (CRE) types—12 ± 0.5 in. (305 ± 10 mm)/min. For constant-rate-of-load (CRL) type, the full load of the tester shall be applied in 20 sec.

NOTE 3—The level of test results obtained with different types of testing machines is not always the same.

5.2 *Cylindrical Specimen Holder, Cut-Away Type*, consisting of a 6-in. (152-mm) length of 1.5-in. (38-mm) outside diameter tubing with a section 2 in. (51 mm) long having half of the tubing cut away. See Fig. 1. This specimen holder should be constructed in a manner that will permit clamping the test specimen in the nonmeasuring, pulling clamp of the tensile testing machine or replacement of the nonmeasuring clamp by the specimen holder.

5.3 *Tuft Clamp*, for use only with cut pile floor coverings, consisting of a tweezer-like clamp that can be used to grip a single tuft tightly enough to assure removal of the whole tuft from the fabric without slippage of the tuft in the clamp. Alternatively, a hemostat[3] can be used.

5.4 *Loop Hook*, for use only with looped pile floor coverings, consisting of a hook which can be readily passed through the loop and hooked under the top of the loop. The hook should be made of wire having a diameter of at least $\frac{1}{32}$ in. (0.8 mm) and should be so constructed that it will not cut the loop during the normal test procedure. The shank of the hook should be so constructed that it can be clamped in the measuring clamp or can replace the measuring clamp of the test machine.

NOTE 4—Because the tuft clamp or loop hook is attached to, or replaces, the usual measuring clamp of the test machine, it is necessary to

[3] Hemostats suitable for this purpose can be obtained from the Fisher Scientific Co., Catalog 65, Catalog No. 8-907, Forceps, Kelly Hemostatic.

ified rates; for constant-rate-of-/ (CRT) and constant-rate-of-ex- (CRE) types—12 ± 0.5 in. 10 mm)/min. For constant-rate- (CRL) type, the full load of the ıall be applied in 3 sec.

3—The level of test results obtained erent types of testing machines is not ıe same.

ylindrical Specimen Holder, Cut-Type, consisting of a 6-in. (152- ngth of 1.5-in. (38-mm) outside r tubing with a section 2 in. (51 ıg having half of the tubing cut See Fig. 1. This specimen holder be constructed in a manner that nit clamping the test specimen in measuring, pulling clamp of the esting machine or replacement of measuring clamp by the specimen

Tuft Clamp, for use only with cut oor coverings, consisting of a -like clamp that can be used to ingle tuft tightly enough to assure l of the whole tuft from the fabric slippage of the tuft in the clamp. tively, a hemostat[3] can be used.

Loop Hook, for use only with pile floor coverings, consisting of which can be readily passed the loop and hooked under the he loop. The hook should be made having a diameter of at least (0.8 mm) and should be so con- d that it will not cut the loop the normal test procedure. The of the hook should be so con- d that it can be clamped in the ing clamp or can replace the meas- lamp of the test machine.

4—Because the tuft clamp or loop hook ıed to, or replaces, the usual measuring f the test machine, it is necessary to

nostats suitable for this purpose can be l from the Fisher Scientific Co., Catalog alog No. 8-907, Forceps, Kelly Hemo-

compensate for the effect of the altered weight of the clamp to retain the previous calibration of the testing machine.

6. Sampling

6.1 Take a lot sample and a laboratory sample as directed in the applicable material specification. In the absence of such specification, select a sample representative of the roll or piece to be tested and of sufficient size so that five specimens each about 6 in. (150 mm) wide and about 8 in. (200 mm) long can be cut from it.

NOTE 5—If the pile floor covering is back coated, exercise care in handling the sample in order that the back coating is not broken or otherwise disturbed.

7. Conditioning

7.1 Bring the specimens to moisture equilibrium for testing in the standard atmosphere for testing textiles approaching equilibrium from the dry side. Determine that moisture equilibrium for testing has been attained as directed in ASTM Method D 1776, Conditioning Textiles and Textile Products for Testing.[2]

8. Preparation of Apparatus

8.1 If required, replace the nonmeasuring clamp of the test machine with the specimen holder described in 5.2.

8.2 Replace the measuring clamp of the test machine with, or attach to the measuring clamp of the test machine, the tuft clamp described in 5.3 or the loop-hook described in 5.4, depending upon which is required for the type of pile floor covering under test (Note 4).

9. Procedure

9.1 Test the conditioned specimens in the standard atmosphere for testing textiles.

9.2 Adjust the constant-rate-of-traverse (CRT) or the constant-rate-of-extension (CRE) type testing machine to operate at a rate of 12 ± 0.5 in. (305 ± 10 mm)/min. Adjust the constant-rate-of-load (CRL) type tester so that the full load is applied in 20 sec.

9.3 *Cut Pile Floor Coverings:*

9.3.1 Mount the test specimen on the specimen holder with the rows of tufts at a right angle to the long axis of the holder in such a position that the tuft to be tested is approximately centered over the cut-away portion of the specimen holder. Adjust the tension so that the specimen presents an undistorted cylindrical surface over the cut-away section of the specimen holder. Locate the tuft to be pulled directly below the center of the pulling clamp or hook.

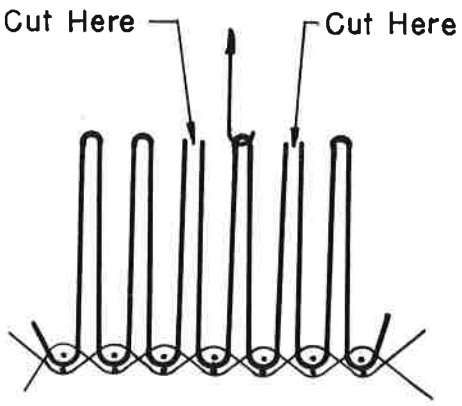

FIG. 2—Arrangement of Hook and Loops for Testing.

9.3.2 Select only one tuft for testing from any one row of tufts and allow at least 1 in. (26 mm) between any tuft tested and the edge of the specimen.

9.3.3 Using the tuft clamp grip one leg (side) of the original loop. Make certain that all fibers forming the tuft are securely gripped by the tuft clamp. Take care not to pinch, "break the back," or otherwise deform the carpet in the selection of, and attachment of the clamp to, the tuft under test.

9.3.4 Determine tuft bind in pounds-force or kilograms-force to the nearest

0.1 lbf or 50 gf required to pull out the tuft from the pile floor covering.

9.3.5 Repeat this procedure on two additional tufts from different rows of tufts.

9.4 *Looped Pile Floor Covering:*

9.4.1 Mount the test specimen on the specimen holder as described in 9.3.1.

9.4.2 Select a location where three adjacent loops are formed by the same end. Cut completely through the first and third loops and test the center loop (Note 6). See Fig. 2.

NOTE 6—If this procedure is not followed, a spurious value may be obtained if one or both ends of the loop under test is buried in the back construction for a number of construction unit repeats.

9.4.3 Insert the loop hook in the loop to be tested. Determine the pounds-force or kilograms-force to the nearest 0.1 lbf or 50 gf required to pull at least one leg of the loop from the pile floor covering.

9.4.4 Repeat this procedure on two additional loops from other rows of loops.

10. Calculations

10.1 Calculate the average force required for all specimens tested for a sample to the nearest 0.1 lbf (50 gf).

11. Report

11.1 State that the tests were performed as directed in ASTM Method D 1335 and give the following information:

11.1.1 Average tuft bind in pounds-force or kilograms-force to the nearest 0.1 lbf or 50 gf value of the test results,

11.1.2 Number of specimens tested,

11.1.3 Type of floor covering tested, and

11.1.4 Type of tensile testing machine on which the tests were performed.

12. Precision

12.1 *Repeatability*—The within-laboratory precision, at the 95 per cent probability level, of the average of three replicates is expected to be within ±7 per cent of the average tuft bind.

12.2 *Reproducibility*—The precision, at the 95 per cent probability level, of the difference between two laboratories, each making three measurements, is expected to be within ±15 per cent of the average tuft bind.

NOTE 7—These values of precision are based on interlaboratory testing by three laboratories on a series of samples that represent most styles of currently produced carpets.

EXHIBIT 2

1970 ANNUAL BOOK OF ASTM STANDARDS

Revision Issued Annually

TA 411
.A65 3



© BY AMERICAN SOCIETY FOR TESTING AND MATERIALS 1970

Library of Congress Catalog Card Number: 40-10712
SBN 8043-0 Coden: ASTSA

Printed in Easton, Md., U.S.A.

C 530–70 Structural Clay Non-Load-Bearing Screen Tile, Spec. for, **12**
C 531–68 Shrinkage and Coefficient of Thermal Expansion of Chemical-Resistant Mortars, Test for, **12**
C 532–66 Structural Insulating Formboard Made from Vegetable Fibers, Spec. for, **14**
C 533–67 Calcium Silicate Block and Pipe Thermal Insulation, Spec. for, **14**
C 534–70 Preformed Flexible Elastomeric Cellular Thermal Insulation in Sheet and Tubular Form, Spec. for, **14**
***C 535–69** Resistance to Abrasion of Large Size Coarse Aggregate by Use of the Los Angeles Machine, Test for, **10**
***C 536–67** Continuity of Coatings in Glassed Steel Equipment by Electrical Testing, Test for, **13**
***C 537–67** Reliability of Glass Coatings on Glassed Steel Reaction Equipment by High Voltage, Test for, **13**
***C 538–67** Color Retention of Red, Orange, and Yellow Porcelain Enamels, Test for, **13**
***C 539–66** Linear Thermal Expansion of Porcelain Enamel Frits by the Interferometric Method, Test for, **13**
***C 540–67** Image Gloss of Porcelain Enamel Surfaces, Test for, **13**
C 541–67 Linings for Asbestos-Cement Pipe, Spec. for, **12**
C 542–69 Elastomeric Structural Glazing and Panel Gaskets, Spec. for, **14, 28**
C 543–67 Slate Blackboards, Spec. for, **12**
C 544–68 Hydration of Magnesite or Periclase Grain, Test for, **13**
C 545–70 Zircon Refractories, Classification of, **13**
C 546–67 Load Test, Long-Time, for Refractory Brick at High Temperatures **13**
C 547–67 Mineral Fiber Preformed Pipe Insulation, Spec. for, **14**
C 548–69 Dimensional Stability of Low-Temperature Thermal Block and Pipe Insulation, Test for, **14**
C 549–67 Perlite Loose Fill Insulation, Spec. for, **14**
C 550–68 Trueness and Squareness of Block Thermal Insulation, Tests for, **14**
C 551–67 Asbestos-Cement Fiberboard Insulating Panels, Spec. for, **12**
C 552–66 Cellular Glass Block and Pipe Thermal Insulation, Spec. for, **13, 14**
C 553–70 Mineral Fiber Blanket and Felt Insulation (Industrial Type), Spec. for, **14**
C 554–64 T Crazing Resistance of Fired Glazed Ceramic Whitewares by a Thermal Shock Method, Test for, **13**
C 555–64 T Lead Extracted from Glazed Ceramic Surfaces, Test for, **13**
C 556–64 T Resistance of Overglaze Decorations to Attack by Detergents, Test for, **13**
C 557–67 Adhesives for Fastening Gypsum Wallboard to Wood Framing, Spec. for, **9**
C 558–69 Lattice Spacing of Nuclear Graphite, Measurement of, **13**
C 559–69 Density in Air of Manufactured Carbon and Graphite Articles by Physical Measurements, Test for, **13**
C 560–69 Carbon and Graphite, Chemical Analysis of, **13**
C 561–69 Ash in Graphite, Test for, **13**
C 562–69 Moisture in Graphite, Test for, **13**
C 563–70 Optimum SO_3 in Portland Cement, Test for, **9**
C 564–70 Rubber Gaskets for Cast Iron Soil Pipe and Fittings, Spec. for, **14, 28**
C 565–65 T Tension Testing of Carbon-Graphite Mechanical Materials, **13**
C 566–67 Total Moisture Content of Aggregate by Drying, Test for, **10**
C 567–69 Unit Weight of Structural Lightweight Concrete, Test for, **10**
C 568–67 Dimension Limestone, Spec. for, **12**
C 569–68 Indentation Hardness of Preformed Thermal Insulations, Test for, **14**
C 570 Not yet assigned
***C 571–70** Carbon and Carbon-Ceramic Refractories, Chemical Analysis of, **13**
***C 572–70** Chrome-Containing Refractories and Chrome Ore, Chemical Analysis of, **13**
***C 573–70** Fireclay and High-Alumina Refractories, Chemical Analysis of, **13**
***C 574–70** Magnesite and Dolomite Refractories, Chemical Analysis of, (Including Tentative Revision) **13**
***C 575–70** Silica Refractories, Chemical Analysis of, **13**
C 576–70 Zircon Refractories, Chemical Analysis of, **13**
C 577–68 Permeability of Refractories, Test for, **13**
C 578–69 Preformed, Block-Type Cellular Polystyrene Thermal Insulation, Spec. for, **14**
***C 579–68** Compressive Strength of Chemical-Resistant Mortars, Test for, **12**
***C 580–68** Flexural Strength and Modulus of Elasticity of Chemical-Resistant Mortars, Test for, **12**
***C 581–68** Chemical Resistance of Thermosetting Resins Used in Glass Fiber Reinforced Structures, Test for, **12, 27**
***C 582–68** Reinforced Plastic Laminates for Self-Supporting Structures for Use in a Chemical Environment, Spec. for, **12**
C 583–67 Modulus of Rupture of Refractory Materials at Elevated Temperatures, Test for, **13**
C 584–65 T 60-Deg Specular Gloss of Glazed Ceramic Whitewares and Related Products, Test for, **13**
C 585–68 Inner and Outer Diameters of Rigid Thermal Insulation for Nominal Sizes of Pipes and Tubing (NPS System), Rec. Practice for, **14**
C 586–69 Potential Alkali Reactivity of Carbonate Rocks for Concrete Aggregates (Rock Cylinder Method), Test for, **10**
C 587–68 Gypsum Veneer Plaster, Spec. for, **9**
C 588–68 Gypsum Base for Veneer Plasters, Spec. for, **9**
C 589–68 Apparent Impact Strength of Preformed Block-Type Insulating Materials, Test for, **14**
C 590–69 Action on Substrates by Coatings, Adhesives, and Joint Sealants Used on or with Thermal Insulations, Test for, **14**
C 591–69 Rigid Preformed Cellular Urethane Thermal Insulation, Spec. for, **14**
C 592–70 Mineral Fiber Blanket Insulation and Blanket-Type Pipe Insulation (Metal-Mesh Covered) (Industrial Type), Spec. for, **14**
C 593–69 Fly Ash and Other Pozzolans for Use With Lime, Spec. for, **9**
C 594–70 Compression Couplings for Vitrified Clay Plain End Pipe, Spec. for, **12**
C 595–68 Blended Hydraulic Cements, Spec. for, **9, 10**
C 596–70 Measuring the Drying Shrinkage of Mortar Containing Portland Cement **9**
C 597–68 T Pulse Velocity Through Concrete, Test for, **10**
C 598–67 T Annealing Point and Strain Point of Glass by Beam Bending, Test for, **13**
C 599–70 Process Glass Pipe and Fittings, Spec. for, **13**
C 600–70 Thermal Shock Test on Glass Pipe **13**
C 601–70 Pressure Test on Glass Pipe, **13**
C 602–69 Agricultural Liming Materials, Spec. for, **9**
C 603–69 Extrusion Rate of One- and Two-Part Joint Sealants and Application Life of Two-Part Joint Sealants, Test for, **21**
C 604–67 True Specific Gravity of Solid Refractory Materials by Gas Comparison Pycnometer, Test for, **13**
C 605–70 Reheat Change of Fireclay Nozzles and Sleeves, Test for, **13**
C 606–70 Lap-Joint Strength of Refractory Mortars at Elevated Temperatures, Test for, **13**
C 607–67 Modulus of Rupture of Coked Pitch-Bearing Refractory Brick and Shapes, Test for, **13**
C 608–67 T Brittle Ring Tensile Strength of Chemically Setting Silicate and Silica Chemical-Resistant Mortars, Test for, **12**
C 609–67 Small Color Differences Between Ceramic Wall or Floor Tile, Measurement of, **13**
C 610–67 Expanded Perlite Block and Pipe Thermal Insulation, Spec. for, **14**
C 611–69 Electrical Resistivity of Manufactured Carbon and Graphite Articles at Room Temperature, Test for, **13**
C 612–70 Mineral Fiber Block and Board Thermal Insulation, Spec. for, **14**
C 613–67 Resin Content of Carbon and Graphite Prepregs by Solvent Extraction, Test for, **13**
C 614–68 Alkali Resistance of Porcelain Enamels, Test for, **13**
C 615–68 Structural Granite, Spec. for, **12**
C 616–68 Building Sandstone, Spec. for, **12**
C 617–68 Capping Cylindrical Concrete Specimens, **10**
C 618–68 T Fly Ash and Raw or Calcined Natural Pozzolans for Use in Portland Cement Concrete, Spec. for, **10**
C 619–68 T Chemical Resistance of Asbestos Fiber Reinforced Thermosetting Resins Used in Self-Supporting Structures, Test for, **12**
C 620–68 Hydration of Pitch-Bearing Basic Refractory Brick, Test for, **13**
C 621–68 Static Corrosion of Refractories by Molten Glass, Test for, **13**
C 622–68 Simulated Service Test for Corrosion Resistance of Refractories to Molten Glass, **13**
C 623–69 T Young's Modulus, Shear Modulus, and Poisson's Ratio for Glass and Glass-Ceramics by Resonance, Test for, **13**
C 624–68 T Delta-in-Hours (DIH) Purity of Nuclear Graphite, Test for, **13**
C 625–68 T Irradiation Results on Graphite, Rec. Practice for Reporting, **13**
C 626–68 T Estimating the Thermal Neutron Absorption Cross Section of Nuclear Graphite, **13**
C 627–70 Evaluating Ceramic Floor Tile Installation Systems, Method for, **13**
C 628–68 T Precision Electroformed Wet Sieve Analysis of Nonplastic Ceramic Powders, **13**
C 629–68 Structural Slate, Spec. for, **12**

EXHIBIT 3

TA
401
.A653

1971 ANNUAL BOOK OF ASTM STANDARDS

Revision Issued Annually

EE

TA401
.A653

© BY AMERICAN SOCIETY FOR TESTING AND MATERIALS 1971
Library of Congress Catalog Card Number: 40-10712
Coden: ASTSA

Printed in Easton, Md., U.S.A.

ABP
Gift
Publisher
Copy

E 395–70 Total Sulfur in Iron Ore by Combustion-Iodate Titration, Test for, **32**
E 396–71 Cadmium Metal, Chemical Analysis of, **32**
E 397–70 T Tungsten, Chemical Analysis of, **32**
E 398–70 Dynamic Measurement of Water Vapor Transfer, Rec. Practice for, **30**
E 399–70 T Plane-Strain Fracture Toughness of Metallic Materials, Test for, **31**
E 400–71 Ores, Minerals, and Rocks by the Fire Assay Preconcentration-Spark Technique, Spectrochemical Analysis of, **32**
E 401–70 Bonding Thin Spectrochemical Samples and Standards to a Greater Mass of Material, Rec. Practice for, **30, 32**
E 402–70 Spectrochemical Analysis of (Uranium Oxide) U_3O_8 by Gallium Oxide Carrier D-C Arc Technique, **32**
E 403–70 Plain-Carbon and Low-Alloy Steel by the Point-to-Plane Technique Using an Optical Emission Spectrometer, Spectrochemical Analysis of, **32**
E 404–70 Plain-Carbon and Low-Alloy Steel for Boron by the Point-to-Plane Arc Technique, Spectrochemical Analysis of, **32**
E 405–70 Wear Testing Rotary Operations for Windows, **14**
E 406–70 Using Controlled Atmospheres in Spectrochemical Analysis, Rec. Practice for, **30, 32**
E 407–70 Microetchants for Metals and Alloys, Spec. for, **31**
E 408–71 Total Normal Emittance of Surfaces Using Inspection-Meter Techniques, Test for, **30**
E 409–71 Description and Performance of the Microphotometer, Rec. Practice for, **30, 32**
E 410–70 Moisture and Residue in Liquid Chlorine, Test for, **22**
E 411–70 Trace Quantities of Carbonyl Compounds with 2, 4-dinitrophenylhydrazine Test for, **22**
E 412–70 Assay of Liquid Chlorine (Zinc Amalgam Method), Test for, **22**
E 413–70 T Sound Transmission Class, Classification for Determination of, **14**
E 414–71 Spectrochemical Analysis of Copper by the Briquet D-C Arc Technique, **32**
E 415–71 Spectrochemical Analysis of Carbon and Low-Alloy Steel Using a Vacuum Spectrometer, **32**
E 416–71 Planning and Safe Operation of a Spectrochemical Laboratory, Rec. Practices for the, **30, 32**
E 417–70 T Colorimetric Determination of Technetium in Aqueous Solutions, **30**
E 418–70 T Fast-Neutron Flux Measurements by Track Etch Technique, **30**
E 419–70 T Selection of Neutron Activation Detector Materials, Guide for, **30**
E 420–71 Sheathed Electrical Resistance Heaters, for Nuclear or other Specialized Service, Spec. for, **30**
E 421–71 High-Purity Iron for Silicon and Aluminum, Spectrochemical Analysis of, **32**
E 422–71 Heat Flux Using a Water Cooled Colorimeter, Measuring, **30**
E 423–71 Normal Spectral Emittance at Elevated Temperatures of Non-Conducting Specimens, Test for, **30**
E 424–71 Solar Energy Transmittance and Reflectance (Terrestrial) of Sheet Materials, Test for, **30**
E 425–71 Leak Testing, Definitions of Terms Relating to, **31**
E 426–71 Electromagnetic (Eddy Current) Testing of Seamless and Welded Tubular Products Made of Austenitic Stainless Steel and Similar Alloys, Rec. Practice for, **31**
E 427–71 Testing for Leaks Using the Halogen Leak Detector (Alkali-Ion Diode), Rec. Practice for, **31**
E 428–71 Fabrication and Control of Steel Reference Blocks Used in Ultrasonic Inspection, **31**
E 429–71 Measurement and Calculation of Reflecting Characteristics of Metallic Surfaces Using Integrating Sphere Instruments, **30**
E 430–71 Gloss of High Gloss Metal Surfaces Using Abridged Goniophotometer or Goniophotometer, **30**
E 431–71 Interpretation of Radiographs of Semiconductors and Related Devices, Rec. Guide to, **31**
E 432–71 Selection of a Leak Testing Method, Rec. Guide for, **31**
E 433–71 Penetrant Inspection, Reference Photographs for, **31**
E 434–71 Calorimetric Determination of Hemispherical Emittance and the Ratio of Solar Absorptance to Hemispherical Emittance using Solar Simulation, Test for, **30**
E 435–71 T Acetic Anhydride Content (Assay) of Acetic Anhydride, Test for, **22**
E 436–71 T Drop-Weight Tear Tests of Ferritic Steels, Calculating, **31**

EXHIBIT 4

TA 401
.A653

Index

pt. 33

1972 ANNUAL BOOK OF ASTM STANDARDS

Revision Issued Annually

75TH ANNIVERSARY

TA401
.A653

N.D.

COPYRIGHT OFFICE
DEC 6 - 1972
COPY
LIBRARY OF CONGRESS

© BY AMERICAN SOCIETY FOR TESTING AND MATERIALS 1972
Library of Congress Catalog Card Number: 40-10712
Coden: ASTSA

Printed in Easton, Md., U.S.A.

for, 3
75–69 Zinc-Coated Steel Wire Strand, Spec. for, 3
76–70 Ductile Iron Castings for Paper Mill Dryer Rolls, Spec. for, 2
77–63 Hot-Worked, Hot-Cold-Worked, and Cold-Worked Alloy Steel Forgings and Forging Billets for High Strength at Elevated Temperatures, Spec. for, 4
78–70 Chromium-Nickel Stainless and Heat-Resisting Steel Weaving Wire, Spec. for, 3
79–71 Stainless and Heat-Resisting Steel Bars and Shapes for Use In Boilers and Other Pressure Vessels, Spec. for, 3
80–71 General Requirements for Delivery of Flat-Rolled Stainless and Heat-Resisting Steel Plate, Sheet, and Strip, Spec. for, 3
81–66 Chrome Metal, Spec. for, 2
82–66(1971) Ferrochrome-Silicon, Spec. for, 2
83–64(1970) Silicomanganese, Spec. for, 2
84–65 General Requirements for Stainless and Heat Resisting Wrought Steel Products (Except Wire), Spec. for, 3
85–63 High Hardenability Bearing Steels, Spec. for, 4
86–71 Steel Castings for Highway Bridges, Spec. for, 2
87–72 Low-Alloy Steel Castings Suitable for Pressure Service, Spec. for, 1, 2
88–72 Qualification of Procedures and Personnel for the Welding of Steel Castings, Rec. Practice for, 2
89–71 Carbon Steel Eyebolts, Spec. for, 4
90–71 Quenched and Tempered Alloy Steel Bolts for Structural Steel Joints, Spec. for, 4
91–71 Aluminum-Coated Steel Chain-Link Fence Fabric, Spec. for, 3
92–72 Stainless and Heat-Resisting Steel Rope Wire, Spec. for, 3
93–70 Stainless and Heat-Resisting Steel for Cold Heading and Cold Forging-Bar and Wire, Spec. for, 3
94–70 Nickel and Nickel Alloy Castings, Spec. for, 2, 7
95–64(1970) Calcium-Silicon and Calcium-Manganese-Silicon, Spec. for, 2
96–72 Deformed Steel Wire for Concrete Reinforcement, Spec. for, 4
97–72 Welded Deformed Steel Wire Fabric for Concrete Reinforcement, Spec. for, 4
98–68 Seamless and Welded Carbon, Ferritic, and Austenitic Alloy Steel Heat Exchanger Tubes with Integral Fins, Spec. for, 1
99–64(1970) Hot-Rolled Rail Carbon Steel Bars and Shapes, Spec. for, 3
100–72 Cold-Formed Welded and Seamless Carbon Steel Structural Tubing in Rounds and Shapes, Spec. for, 1, 4
101–71 Hot-Formed Welded and Seamless Carbon Steel Structural Tubing, Spec. for, 1, 4
102–65 Steel Structural Rivets, Spec. for, 4
103–64(1970) Ultrasonic Examination of Large Forged Crankshafts, Rec. Practice for, 4
104–70a Wrought Carbon Steel Wheels, Spec. for, 4
105–64 General Requirements for Hot-Rolled and Cold-Rolled Alloy Steel Sheet and Strip, Spec. for, 3
106–64 Regular Quality Hot-Rolled and Cold-Rolled Alloy Steel Sheets and Strip, Spec. for, 3
107–64 Drawing Quality Hot-Rolled and Cold-Rolled Alloy Steel Sheets and Strip, Spec. for, 3
108–69 Quenched and Tempered Vacuum Treated Carbon and Alloy Steel Forgings for Pressure Vessels, Spec. for, 4
109–68 Steel Forging, Def. of, 4
110–71 Wire Rods, and Coarse Round Wire, Carbon Steel, Spec. for, 3
111–71 Seamless Stainless Steel Mechanical Tubing, Spec. for, 1
112–66 Cold-Drawn Buttweld Carbon Steel Mechanical Tubing, Spec. for, 1
113–70 Electric-Resistance-Welded Carbon and Alloy Steel Mechanical Tubing, Spec. for, 1
114–70 High-Yield Strength, Quenched and Tempered Alloy Steel Plate, Suitable for Welding, Spec. for, 4
115–72 Pressure Vessel Plates, Carbon Steel, for Intermediate- and Higher-Temperature Service, Spec. 4
116–72 Pressure Vessel Plates, Carbon Steel, for Moderate- and Lower-Temperature Service, Spec. 4
117–72 Pressure Vessel Plates, Alloy Steel, High Strength, Quenched and Tempered, Spec. for, 4
118–64 Corrosion-Resistant High Silicon Cast Iron, Spec. for, 2
119–72a Seamless Carbon and Alloy Steel Mechanical Tubing, Spec. for, 1
120–64 Seamless and Electric-Resistance-Welded Carbon Steel Tubular Products for High-Temperature Service Conforming to ISO Recommendations for Boiler Construction, Spec. for Supplementary Requirements 1
121– Steel, Closed-Impression Die Forgings for General Industrial Use, Spec. for, 4
*A 522–68 Forged or Rolled 9 Percent Nickel Alloy Steel Flanges, Fittings, Valves, and Parts for Low-Temperature Service, Spec. for, 1
*A 523–68 Plain End Seamless and Electric-Resistance-Welded Steel Pipe for High Pressure Pipe-Type Cable Circuits, Spec. for, 1
A 524–72a Seamless Carbon Steel Pipe for Process Piping, Spec. for, 1
A 525–71 Steel Sheet, Zinc-Coated (Galvanized) by the Hot-Dip Process, General Requirements, Spec. for, 3
A 526–71 Steel Sheet, Zinc-Coated (Galvanized) by the Hot-Dip Process, Commercial Quality, Spec. for, 3
A 527–71 Steel Sheet, Zinc-Coated (Galvanized) by the Hot-Dip Process, Lock Forming Quality, Spec. for, 3
A 528–71 Steel Sheet, Zinc-Coated (Galvanized) by the Hot-Dip Process, Drawing Quality, Spec. for, 3
*A 529–72 Structural Steel with 42,000 psi (290 MPa) Minimum Yield Point (½ in.) (12.7 mm) Maximum Thickness), Spec. for, 4
A 530–72 General Requirements for Specialized Carbon and Alloy Steel Pipe, Spec. for, 1
*A 531–65(1970) Ultrasonic Inspection of Turbine-Generator Steel Retaining Rings, Rec. Practice for, 4
A 532–67 Abrasion-Resistant Cast Irons, Spec. for, 2
A 533–72a Pressure Vessel Plates, Alloy Steel, Quenched and Tempered, Manganese-Molybdenum and Manganese-Molybdenum- Nickel, Spec. for, 4
*A 534–65 Carburizing Steels for Anti-Friction Bearings, Spec. for, 4
*A 535–65 Special Quality Ball and Roller Bearing Steel, Spec. for, 4
A 536–70 Ductile Iron Castings, Spec. for, 2
A 537–72 Pressure Vessel Plates, Heat Treated, Carbon-Manganese-Silicon, Spec. for, 4
*A 538–72a Pressure Vessel Plates, Alloy Steel, Precipitation Hardening (Maraging), 18 Percent Nickel, Spec. for, 4
A 539–71 Electric-Resistance-Welded Coiled Steel Tubing for Gas and Fuel Oil Lines, Spec. for, 1
*A 540–70 Alloy Steel Bolting Materials for Special Applications, Spec. for, 1
*A 541–69 Quenched and Tempered Carbon and Alloy Steel Forgings for Pressure Vessel Components, Spec. for, 4
A 542–72 Pressure Vessel Plates, Alloy Steel, Quenched and Tempered, Chromium-Molybdenum, Spec. for, 4
A 543–72a Pressure Vessel Plates, Alloy Steel, Quenched and Tempered, Nickel-Chromium-Molybdenum, Spec. for, 4
*A 544–72 Steel Wire, Carbon, Scrapless Nut Quality, Spec. for, 3
*A 545–71 Steel Wire, Carbon, Cold Heading Quality for Machine Screws, Spec. for, 3
*A 546–72 Steel Wire, Medium-High Carbon, Cold Heading Quality for Hexagon-Head Bolts, Spec. for, 3
*A 547–72 Steel Wire, Alloy Cold Heading Quality for Hexagon-Head Bolts, Spec. for, 3
*A 548–71 Steel Wire, Carbon Cold-Heading Quality for Tapping or Sheet Metal Screws, Spec. for, 3
*A 549–71 Steel Wire Cold-Heading Quality for Wood Screws, Spec. for, 3
*A 550–65 Ferrocolumbium, Spec. for, 2
*A 551–65(1970) Steel Tires, Spec. for, 4
*A 552–65a Alloy Steel Bars for Springs, Spec. for, 3
A 553–72a Pressure Vessel Plates, Alloy Steel, Quenched and Tempered, Eight and Nine Percent Nickel, Spec. for, 4
A 554–70 Welded Stainless Steel Mechanical Tubing, Spec. for, 1
A 555–67 General Requirements for Stainless and Heat-Resisting Steel Wire, Spec. for, 3
A 556–65 Seamless Cold-Drawn Carbon Steel Feedwater Heater Tubes, Spec. for, 1
A 557–69 Electric-Resistance-Welded Carbon Steel Feedwater Heater Tubes, Spec. for, 1
*A 558 and A 559 Discontinued—**Available from American Welding Society***
A 560–66 Chromium-Nickel Alloy Castings, Spec. for, 2
*A 561–66 Macroetch Testing of Tool Steel Bars, Rec. Practice for, 3
A 562–72 Pressure Vessel Plates, Carbon Steel, Manganese-Titanium Glass or Diffused Metallic Coatings, Spec. for, 4
*A 563–70 Carbon Steel Nuts, Spec. for, 1, 4
A 564–72 Hot-Finished or Cold-Finished Precipitation-Hardening Stainless and Heat-Resisting Steel Bars and Shapes, Spec. for, 3
A 565–66 Martensitic Stainless Steel Bars, Forgings, and Forging Stock for High Temperature Service, Spec. for, 3, 4
A 566–68(1972) Alternating Current Magnetic Properties of Materials Using Alternating Current Potentiometer and 25-cm Epstein Frame, Test for, 8
A 567–66 Alloy Castings for High Strength at Elevated Temperatures, Spec. for, 2
A 568–71 General Requirements for Carbon and High-Strength Low-Alloy Steel, Hot-Rolled Strip, Hot-Rolled Sheets, and Cold-Rolled Sheets, Spec. for, 3
A 569–72 Steel Carbon (0.15 Maximum Percent), Hot-Rolled Sheet and Strip, Commercial Quality, Spec. for, 3
A 570–72 Hot-Rolled Carbon Steel Sheets and Strip, Structural Quality, Spec. for, 3, 4
A 571–70 Austenitic Ductile Iron Castings for Pressure Containing Parts Suitable for Low-Temperature Service, Spec. for, 2
A 572–72 High-Strength Low-Alloy Columbium-Vanadium Steels of Structural Quality, Spec. for, 4
A 573–70a Structural Carbon Steel Plates of Improved Toughness, Spec. for, 4
A 574–67 Alloy Steel Socket-Head Cap Screws, Spec. for, 4
A 575–71 Merchant Quality Hot-Rolled Carbon Steel Bars, Spec. for, 3
A 576–71 Special Quality Hot-Rolled Carbon Steel Bars, Spec. for, 3
A 577–70a Ultrasonic Angle-Beam Examination of Steel Plates, Spec. for, 4
A 578–71b Straight-Beam Ultrasonic Examination of Plain and Clad Steel Plates for Special Applications, Spec. for, 4
A 579–70 Superstrength Alloy Steel Forgings, Spec. for, 4
A 580–67 Stainless and Heat-Resisting Steel Wire, Spec. for, 3
A 581–70 Free-Machining Stainless and Heat-Resisting Steel Wire, Spec. for, 3
A 582–70 Free-Machining Stainless and Heat-Resisting Steel Bars, Hot-Rolled or Cold-Finished, Spec. for, 3
A 583–71a Cast Steel Wheels for Railway Service, Spec. for, 4
A 584–68 Aluminum-Coated Steel Farm-Field and Right-of-Way Fencing, Spec. for, 3
A 585–71 Aluminum-Coated Steel Barbed Wire, Spec. for, 3
A 586–68 Zinc-Coated Steel Structural Strand, Spec. for, 3
A 587–71 Electric-Welded Low-Carbon Steel Pipe for the Chemical Industry, Spec. for, 1
A 588–71 High-Strength Low-Alloy Structural Steel with 50,000 psi Minimum Yield Point to 4 in. Thick, Spec. for, 4
A 589–72 Seamless and Welded Carbon Steel Water Well Pipe, Spec. for, 1
A 590–72a Pressure Vessel Plates, Alloy Steel, Precipitation Hardening (Maraging), 12 Percent Nickel, Spec. for, 4
A 591–68 Electrolytic Zinc-Coated Steel Sheets, Spec. for, 3
A 592–68 High-Strength Quenched and Tempered Low-Alloy Steel Forged Fittings and Parts for Pressure Vessels, Spec. for, 4
A 593–72 Charpy V-Notch Testing Requirements for Steel Plates for Pressure Vessels, Spec. for, 4
A 594–69 Carbon Steel Forgings with Special Magnetic Characteristics, Spec. for, 4
A 595–69 Steel Tubes Low Carbon, Tapered, for Structural Use, Spec. for, 1, 4
A 596–69 Direct Current Magnetic Properties of Materials Using Ring Test Procedures and the Ballistic Methods, Test for, 8
A 597–69 Cast Tool Steel, Spec. for, 2
A 598–69 Magnetic Properties of Magnetic Amplifier Cores, Test for, 8
A 599–69 Steel Sheet, Cold-Rolled, Tin-Coated by Electrodeposition, Spec. for, 3
A 600–69 High-Speed Tool Steel, Spec. for, 3
A 601–69 Electrolytic Manganese Metal, Spec. for, 2
A 602–70 Automotive Malleable Iron Castings, Spec. for, 2
A 603–70 Zinc-Coated Steel Structural Wire Rope, Spec. for, 3
A 604–70 Macroetch Testing of Consumable Electrode Vacuum Arc Remelted Steel Bars and Billets, 3
A 605–72 Pressure Vessel Plates, Alloy Steel, Quenched and Tempered, Nickel-Cobalt-Molybdenum- Chromium, Spec. for, 4
A 606–70 Steel Hot-Rolled and Cold-Rolled Sheet and Strip, High Strength, Low Alloy with Improved Corrosion Resistance, Spec. for, 3
A 607–70 Steel Sheet and Strip, Hot-Rolled and Cold-Rolled, High Strength, Low-Alloy Columbium and or Vanadium, Spec. for, 3
A 608–70 Centrifugally Cast Iron-Chromium-Nickel High Alloy Tubing for Pressure Application at High Temperatures, Spec. for, 1, 2
A 609–70 Longitudinal Beam Ultrasonic Inspection for Carbon and Low Alloy Steel Castings, Spec. for, 2
A 610–70 Sampling and Testing Ferroalloys for Determination of Size, 2
A 611–72 Steel, Cold-Rolled Sheet, Carbon Structural, Spec. for, 3, 4
A 612–72 High-Strength Steel Plates for Pressure Vessels

EXHIBIT 5

1976 Annual Book of ASTM Standards

Index

Hot-Rolled or Cold-Finished, Spec. for, **5**

***A 435–75** Straight-Beam Ultrasonic Examination of Steel Plates for Pressure Vessels, Spec. for, **4**

A 436–72a Austenitic Gray Iron Castings, Spec. for, **2**

***A 437–76** Alloy-Steel Turbine-Type Bolting Material Specially Heat Treated for High-Temperature Service, Spec. for, **1**

A 438–62(1974) Transverse Testing of Gray Cast Iron **2**

A 439–71 Austenitic Ductile Iron Castings, Spec. for, **2**

***A 440–75** High-Strength Structural Steel, Spec. for, **4**

***A 441–75** High-Strength Low-Alloy Structural Manganese Vanadium Steel, Spec. for, **4**

***A 442–74a** Pressure Vessel Plates, Carbon Steel, Improved Transition Properties, Spec. for, **4**

A 443 Discontinued—Combined with A 370

***A 444–75** Steel Sheet, Zinc Coated (Galvanized) by the Hot-Dip Process for Culverts and Underdrains, Spec. for, **3**

A 445 Discontinued—Replaced by A 395

***A 446–75** Steel Sheet, Zinc-Coated (Galvanized) by the Hot-Dip Process, Structural (Physical) Quality, Spec. for, **3**

***A 447–74** Chromium-Nickel-Iron Alloy Castings (25-12 Class) for High-Temperature Service, Spec. for, **2**

A 448 Discontinued

***A 449–76b** Quenched and Tempered Steel Bolts and Studs, Spec. for, **4**

***A 450–76a** Carbon, Ferritic Alloy, and Austenitic Alloy Steel Tubes, Spec. for General Requirements for, **1**

***A 451–76** Centrifugally Cast Austenitic Steel Pipe for High-Temperature Service, Spec. for, **1**

***A 452–75** Centrifugally Cast Austenitic Steel Cold-Wrought Pipe for High-Temperature Service, Spec. for, **1**

***A 453–75** Bolting Materials, High-Temperature, 50 to 120 ksi Yield Strength, with Expansion Coefficients Comparable to Austenitic Steels, Spec. for, **1**

***A 454–72** Steel Conveyor Chain, Spec. for, **5**

***A 455–74c** Pressure Vessel Plates, Carbon Steel, High Strength Manganese, Spec. for, **4**

***A 456–71**(1976) Magnetic Particle Inspection of Large Crankshaft Forgings, Spec. for, **5**

***A 457–71** Hot-Worked, Hot-Cold-Worked, and Cold-Worked Alloy Steel Plate, Sheet, and Strip for High Strength at Elevated Temperatures, Spec. for, **3**

***A 458–71** Hot-Worked, Hot-Cold-Worked, and Cold-Worked Alloy Steel Bars for High Strength at Elevated Temperatures, Spec. for, **5**

***A 459–71**(1975) Zinc-Coated Flat Steel Armoring Tape, Spec. for, **3**

A 460–68(1972) Copper-Clad Steel Wire Strand, Spec. for, **3**

A 461 Discontinued—Replaced by A 564, A 637, A 638, A 639

A 462 Discontinued—Replaced by E 165

***A 463–75** Steel Sheet, Cold-Rolled, Aluminum-Coated Type 1, Spec. for, **3**

A 464 Discontinued—Replaced by E 376

A 465 Discontinued

***A 466–73** Weldless Carbon Steel Chain, Spec. for, **5**

***A 467–72** Machine and Coil Chain, Spec. for, **5**

A 468 Discontinued—Replaced by A 6 and A 341

***A 469–71** Vacuum Treated Steel Forgings for Generator Rotors, Spec. for, **5**

***A 470–74** Vacuum-Treated Carbon and Alloy Steel Forgings for Turbine Rotors and Shafts, Spec. for, **5**

***A 471–70**(1975) Vacuum-Treated Alloy Steel Forgings for Turbine Rotor Disks and Wheels, Spec. for, **5**

***A 472–74** Heat Stability of Steam Turbine Shafts and Rotor Forgings, Test for, **5**

***A 473–75** Stainless and Heat-Resisting Steel Forgings, Spec. for, **5**

A 474–68(1972) Aluminum-Coated Steel Wire Strand, Spec. for, **3**

***A 475–72a** Zinc-Coated Steel Wire Strand, Spec. for, **3**

A 476–70(1976) Ductile Iron Castings for Paper Mill Dryer Rolls, Spec. for, **2**

***A 477–71** Hot-Worked, Hot-Cold-Worked and Cold-Worked Alloy Steel Forgings and Forging Billets for High Strength at Elevated Temperatures, Spec. for, **5**

***A 478–70**(1974) Chromium-Nickel Stainless and Heat-Resisting Steel Weaving Wire, Spec. for, **3**

***A 479–75** Stainless and Heat-Resisting Steel Bars and Shapes for Use in Boilers and Other Pressure Vessels, Spec. for, **4, 5**

***A 480–75** Flat-Rolled Stainless and Heat-Resisting Steel Plate, Sheet, and Strip, Spec. for General Requirements for, **3**

***A 481–73** Chromium Metal, Spec. for, **2**

***A 482–76** Ferrochrome-Silicon, Spec. for, **2**

***A 483–64**(1974) Silicomanganese, Spec. for, **2**

***A 484–76** Stainless and Heat Resisting Wrought Steel Products (Except Wire), Spec. for General Requirements for, **5**

***A 485–75** High Hardenability Bearing Steels, Spec. for, **5**

***A 486–74** Steel Castings for Highway Bridges, Spec. for, **2**

***A 487–76** Steel Castings Suitable for Pressure Service, Spec. for, **1, 2**

***A 488–75** Qualification of Procedures and Personnel for the Welding of Steel Castings, Rec. Practice for, **2**

***A 489–72** Carbon Steel Eyebolts, Spec. for, **4**

***A 490–76a** Quenched and Tempered Alloy Steel Bolts for Structural Steel Joints, Spec. for, **4**

***A 491–74** Aluminum-Coated Steel Chain-Link Fence Fabric, Spec. for, **3**

***A 492–72** Stainless and Heat-Resisting Steel Rope Wire, Spec. for, **3**

***A 493–74** Stainless and Heat-Resisting Steel for Cold Heading and Cold Forging—Bar and Wire, Spec. for, **3**

***A 494–76** Nickel and Nickel Alloy Castings, Spec. for, **2, 8**

***A 495–76** Calcium-Silicon and Calcium-Manganese-Silicon, Spec. for, **2**

***A 496–72** Deformed Steel Wire for Concrete Reinforcement, Spec. for, **4**

***A 497–72** Welded Deformed Steel Wire Fabric for Concrete Reinforcement, Spec. for, **4**

***A 498–68**(1973) Seamless and Welded Carbon, Ferritic, and Austenitic Alloy Steel Heat-Exchanger Tubes with Integral Fins, Spec. for, **1**

***A 499–74** Hot-Rolled Rail Carbon Steel Bars and Shapes, Spec. for, **5**

***A 500–74a** Cold-Formed Welded and Seamless Carbon Steel Structural Tubing in Rounds and Shapes, Spec. for, **1, 4**

***A 501–76** Hot-Formed Welded and Seamless Carbon Steel Structural Tubing, Spec. for, **1, 4**

***A 502–76** Steel Structural Rivets, Spec. for, **4**

***A 503–75** Ultrasonic Examination of Large Forged Crankshafts, Spec. for, **5**

***A 504–74** Wrought Carbon Steel Wheels, Spec. for, **4**

***A 505–75** Steel Sheet and Strip, Alloy, Hot-Rolled and Cold-Rolled, Spec. for General Requirements for, **3**

***A 506–73** Steel Sheet and Strip, Alloy, Hot-Rolled and Cold-Rolled, Regular Quality, Spec. for, **3**

***A 507–73** Steel Sheet and Strip, Alloy, Hot-Rolled and Cold-Rolled, Drawing Quality, Spec. for, **3**

***A 508–74a** Quenched and Tempered Vacuum Treated Carbon and Alloy Steel Forgings for Pressure Vessels, Spec. for, **4, 5**

***A 509–68**(1974) Steel Forging, Def. of, **5**

***A 510–75** Wire Rods, and Coarse Round Wire, Carbon Steel, Spec. for General Requirements for, **3**

***A 511–76** Seamless Stainless Steel Mechanical Tubing, Spec. for, **1**

***A 512–66**(1976) Cold-Drawn Buttweld Carbon Steel Mechanical Tubing, Spec. for, **1**

***A 513–75** Electric-Resistance-Welded Carbon and Alloy Steel Mechanical Tubing, Spec. for, **1**

***A 514–75** High-Yield Strength, Quenched and Tempered Alloy Steel Plate, Suitable for Welding, Spec. for, **4**

***A 515–74b** Pressure Vessel Plates, Carbon Steel, for Intermediate- and Higher-Temperature Service, Spec. for, **4**

***A 516–76** Pressure Vessel Plates, Carbon Steel, for Moderate- and Lower-Temperature Service, Spec. for, **4**

***A 517–74a** Pressure Vessel Plates, Alloy Steel, High-Strength, Quenched and Tempered, Spec. for, **4**

***A 518–64**(1974) Corrosion-Resistant High-Silicon Cast Iron, Spec. for, **2**

***A 519–76** Seamless Carbon and Alloy Steel Mechanical Tubing, Spec. for, **1**

***A 520–72** Seamless and Electric-Resistance-Welded Carbon Steel Tubular Products for High-Temperature Service Conforming to ISO Recommendations for Boiler Construction, Spec. for Supplementary Requirements for, **1**

***A 521–76** Steel, Closed-Impression Die Forgings for General Industrial Use, Spec. for, **5**

***A 522–76** Forged or Rolled 8 and 9% Nickel Alloy Steel Flanges, Fittings, Valves, and Parts for Low-Temperature Service, Spec. for, **1**

Adoptions and revisions approved after a part's closing date do not appear in the 1976 edition of the part. See note on page 1.

***A 523–73** Plain End Seamless and Electric-Resistance-Welded Steel Pipe for High-Pressure Pipe-Type Cable Circuits, Spec. for, **1**

***A 524–76** Seamless Carbon Steel Pipe for Atmospheric and Lower Temperatures, Spec. for, **1**

***A 525–75** Steel Sheet, Zinc-Coated (Galvanized) by the Hot-Dip Process, General Requirements, Spec. for, **3**

***A 526–71**(1975) Steel Sheet, Zinc-Coated (Galvanized) by the Hot-Dip Process, Commercial Quality, Spec. for, **3**

***A 527–71**(1975) Steel Sheet, Zinc-Coated (Galvanized) by the Hot-Dip Process, Lock Forming Quality, Spec. for, **3**

***A 528–71**(1975) Steel Sheet, Zinc-Coated (Galvanized) by the Hot-Dip Process, Drawing Quality, Spec. for, **3**

***A 529–75** Structural Steel with 42,000 psi (290 MPa) Minimum Yield Point (½ in. (12.7 mm) Maximum Thickness), Spec. for, **4**

***A 530–76** Specialized Carbon and Alloy Steel Pipe, Spec. for General Requirements for, **1**

***A 531–74** Ultrasonic Inspection of Turbine-Generator Steel Retaining Rings, Rec. Practice for, **5**

A 532–75a Abrasion-Resistant Cast Irons, Spec. for, **2**

***A 533–74** Pressure Vessel Plates, Alloy Steel, Quenched and Tempered, Manganese-Molybdenum and Manganese-Molybdenum-Nickel, Spec. for, **4**

***A 534–76** Carburizing Steels for Anti-Friction Bearings, Spec. for, **5**

***A 535–65** Special Quality Ball and Roller Bearing Steel, Spec. for, **5**

A 536–72 Ductile Iron Castings, Spec. for, **2**

***A 537–75** Pressure Vessel Plates, Heat Treated, Carbon-Manganese-Silicon, Spec. for, **4**

***A 538–72a** Pressure Vessel Plates, Alloy Steel, Precipitation Hardening (Maraging), 18 Percent Nickel, Spec. for, **4**

***A 539–73** Electric-Resistance-Welded Coiled Steel Tubing for Gas and Fuel Oil Lines, Spec. for, **1**

***A 540–76** Alloy Steel Bolting Materials for Special Applications, Spec. for, **1, 45**

***A 541–73** Steel Forgings, Carbon and Alloy, Quenched and Tempered, for Pressure Vessel Components, Spec. for, **4, 5**

***A 542–74** Pressure Vessel Plates, Alloy Steel, Quenched and Tempered, Chromium-Molybdenum, Spec. for, **4**

***A 543–74** Pressure Vessel Plates, Alloy Steel, Quenched and Tempered, Nickel-Chromium-Molybdenum, Spec. for, **4**

***A 544–72** Steel Wire, Carbon, Scrapless Nut Quality, Spec. for, **3**

***A 545–76** Steel Wire, Carbon, Cold-Heading Quality, for Machine Screws, Spec. for, **3**

***A 546–72** Steel Wire, Medium-High-Carbon, Cold-Heading Quality, for Hexagon-Head Bolts, Spec. for, **3**

***A 547–72** Steel Wire, Alloy, Cold-Heading Quality, for Hexagon-Head Bolts, Spec. for, **3**

***A 548–76** Steel Wire, Carbon, Cold-Heading Quality, for Tapping or Sheet Metal Screws, Spec. for, **3**

***A 549–76** Steel Wire, Carbon, Cold-Heading Quality, for Wood Screws, Spec. for, **3**

***A 550–73** Ferrocolumbium, Spec. for, **2**

***A 551–65**(1976) Steel Tires, Spec. for, **4**

A 552 Discontinued—Replaced by A 689

***A 553–74** Pressure Vessel Plates, Alloy Steel, Quenched and Tempered, Eight and Nine Percent Nickel, Spec. for, **4**

***A 554–75** Welded Stainless Steel Mechanical Tubing, Spec. for, **1**

A 555–76 Stainless and Heat-Resisting Steel Wire, Spec. for General Requirements for, **3**

***A 556–76** Seamless Cold-Drawn Carbon Steel Feedwater Heater Tubes, Spec. for, **1**

***A 557–76** Electric-Resistance-Welded Carbon Steel Feedwater Heater Tubes, Spec. for, **1**

A 558 Discontinued—Available from American Welding Society

A 559 Discontinued—Available from American Welding Society

***A 560–74** Chromium-Nickel Alloy Castings, Spec. for, **2**

***A 561–71** Macroetch Testing of Tool Steel Bars, Rec. Practice for, **5**

***A 562–74a** Pressure Vessel Plates, Carbon Steel, Manganese-Titanium for Glass or Diffused Metallic Coatings, Spec. for, **4**

***A 563–76a** Carbon Steel Nuts, Spec. for, **1, 4**

A 564–74 Hot-Rolled and Cold-Finished Age-Hardening Stainless and Heat-Resisting Steel Bars and Shapes, Spec. for, **5**

***A 565–74** Martensitic Stainless Steel Bars, Forgings, and Forging Stock for High Temperature Service, Spec. for, **5**

***A 566–68**(1972) Alternating-Current Magnetic Properties of Materials Using Alternating Current Potentiometer and 25-cm Epstein Frame, Test for, **44**

***A 567–74** Iron, Cobalt, and Nickel Base Alloy Castings for High Strength at Elevated Temperatures, Spec. for, **2**

***A 568–74** Steel, Carbon and High-Strength Low-Alloy Hot-Rolled Sheet, Hot-Rolled Strip, and Cold-Rolled Sheet, General Requirements, Spec. for, **3**

***A 569–72** Steel, Carbon (0.15 Maximum, Percent), Hot-Rolled Sheet and Strip, Commercial Quality, Spec. for, **3**

***A 570–75** Hot-Rolled Carbon Steel Sheet and Strip, Structural Quality, Spec. for, **3, 4**

A 571–71(1976) Austenitic Ductile Iron Castings for Pressure Containing Parts Suitable for Low-Temperature Service, Spec. for, **2**

***A 572–75** High-Strength Low-Alloy Columbium-Vanadium Steels of Structural Quality, Spec. for, **4**

***A 573–75** Structural Carbon Steel Plates of Improved Toughness, Spec. for, **4**

***A 574–76** Alloy Steel Socket-Head Cap Screws, Spec. for, **4**

***A 575–73** Merchant Quality Hot-Rolled Carbon Steel Bars, Spec. for, **5**

***A 576–74** Steel Bars, Carbon, Hot-Rolled, Special Quality, Spec. for, **5**

***A 577–73** Ultrasonic Angle-Beam Examination of Steel Plates, Spec. for, **4**

***A 578–75** Straight-Beam Ultrasonic Examination of Plain and Clad Steel Plates for Special Applications, Spec. for, **4**

***A 579–70** Superstrength Alloy Steel Forgings, Spec. for, **5**

***A 580–75** Stainless and Heat-Resisting Steel Wire, Spec. for, **3**

***A 581–75** Free-Machining Stainless and Heat-Resisting Steel Wire, Spec. for, **3**

***A 582–75** Free-Machining Stainless and Heat-Resisting Steel Bars, Hot-Rolled or Cold-Finished, Spec. for, **5**

***A 583–73** Cast Steel Wheels for Railway Service, Spec. for, **4**

A 584–68(1972) Aluminum-Coated Steel Farm-Field and Right-of-Way Fencing, Spec. for, **3**

***A 585–71**(1975) Aluminum-Coated Steel Barbed Wire, Spec. for, **3**

A 586–68(1972) Zinc-Coated Steel Structural Strand, Spec. for, **3**

***A 587–73** Electric-Welded Low-Carbon Steel Pipe for the Chemical Industry, Spec. for, **1**

***A 588–75** High-Strength Low-Alloy Structural Steel with 50,000 psi Minimum Yield Point to 4 in. Thick, Spec. for, **4**

***A 589–73** Seamless and Welded Carbon Steel Water Well Pipe, Spec. for, **1**

***A 590–72a** Pressure Vessel Plates, Alloy Steel, Precipitation Hardening (Maraging), 12 Percent Nickel, Spec. for, **4**

A 591–68(1973) Steel Sheet, Cold-Rolled, Electrolytic Zinc-Coated, Spec. for, **3**

***A 592–74** High-Strength Quenched and Tempered Low-Alloy Steel Forged Fittings and Parts for Pressure Vessels, Spec. for, **4, 5**

A 593 Discontinued

***A 594–69**(1975) Carbon Steel Forgings with Special Magnetic Characteristics, Spec. for, **5**

***A 595–74** Steel Tubes, Low-Carbon, Tapered for Structural Use, Spec. for, **1, 4**

A 596–69(1974) Direct-Current Magnetic Properties of Materials Using Ring Test Procedures and the Ballistic Methods, Test for, **44**

***A 597–75** Cast Tool Steel, Spec. for, **2**

A 598–69(1974) Magnetic Properties of Magnetic Amplifier Cores, Test for, **44**

A 599–69(1973) Steel Sheet, Cold-Rolled, Tin-Coated by Electrodeposition, Spec. for, **3**

***A 600–69** High-Speed Tool Steel, Spec. for, **5**

***A 601–69**(1974) Electrolytic Manganese Metal, Spec. for, **2**

A 602–70(1976) Automotive Malleable Iron Castings, Spec. for, **2**

A 603–70(1974) Zinc-Coated Steel Structural Wire Rope, Spec. for, **3**

***A 604–76** Macroetch Testing of Consumable Electrode Vacuum Arc Remelted Steel Bars and Billets **3, 5**

EXHIBIT 6

1978 Annual Book of ASTM Standards

Index

1978

A. FERROUS METALS

*A 1–76 Carbon Steel Tee Rails, Spec. for, 4
*A 2–69 Steel Girder Rails of Plain, Grooved, and Guard Types, Spec. for, 4
*A 3–64(1970) Low-Carbon Steel Joint Bars, Spec. for, 4
*A 4–64(1970) Medium-Carbon Steel Joint Bars, Spec. for, 4
*A 5–68 High-Carbon Steel Joint Bars, Spec. for, 4
*A 6–77b Rolled Steel Plates, Shapes, Sheet Piling, and Bars for Structural Use, Spec. for General Requirements for, 4
*A 7 *Discontinued—Replaced by A 36 (for rolled shapes), A 283, A 663, A 675*
*A 8 *Discontinued*
*A 9 *Discontinued*
*A 10 *Discontinued—Replaced by A 283*
*A 11 *Discontinued—Replaced by A 113*
*A 12 *Discontinued—Replaced by A 131*
*A 13 *Discontinued—Replaced by A 131*
*A 14 *Discontinued—Replaced by A 68*
*A 15 *Discontinued—Replaced by A 615*
*A 16 *Discontinued—Replaced by A 616*
*A 17 *Discontinued—Replaced by A 273, A 274*
*A 18 *Discontinued—Replaced by A 235, A 236, A 237, A 238*
*A 19 *Discontinued—Replaced by A 236*
*A 20–77 Steel Plates for Pressure Vessels, Spec. for General Requirements for, 4
*A 21–77 Carbon Steel Axles, Nonheat-Treated and Heat-Treated, for Railway Use, Spec. for, 4
*A 22 *Discontinued—Replaced by A 504*
*A 23 *Discontinued—Replaced by A 504*
*A 24 *Discontinued—Replaced by A 504*
*A 25–77 Wrought Steel Wheels for Electric Railway Service, Spec. for, 4
*A 26 *Discontinued—Replaced by A 551*
*A 27–77 Mild- to Medium-Strength Carbon-Steel Castings for General Application, Spec. for, 2
*A 28 *Discontinued*
*A 29–76 Steel Bars, Carbon and Alloy, Hot-Rolled and Cold-Finished, Spec. for General Requirements for, 5
*A 30 *Discontinued*
*A 31–76 Boiler Rivet Steel and Rivets, Spec. for, 4
*A 32 *Discontinued—Replaced by A 107, A 108*
*A 33 *Discontinued—Replaced by E 30*
*A 34–70(1976) Magnetic Materials, Testing, 44
*A 35 *Discontinued*
*A 36–77a Structural Steel, Spec. for, 4
*A 37 *Discontinued*
*A 38 *Discontinued*
*A 39 *Discontinued—Replaced by A 84*
*A 40 *Discontinued—Replaced by A 84*
*A 41 *Discontinued*
*A 42 *Discontinued*
*A 43–75 Merchant Pig Iron, Spec. for, 2
*A 44 *Discontinued—Replaced by A 377*
*A 45 *Discontinued*
*A 46 *Discontinued*
*A 47–77 Malleable Iron Castings, Spec. for, 2
*A 48–76 Gray Iron Castings, Spec. for, 2
*A 49–68 Quenched Carbon Steel Joint Bars, Spec. for, 4
*A 50 *Discontinued—Replaced by A 183*
*A 51 *Discontinued—Replaced by A 183*
*A 52 *Discontinued*
*A 53–77a Pipe, Steel, Black and Hot-Dipped, Zinc-Coated Welded and Seamless, Spec. for, 1
*A 54 *Discontinued—Replaced by A 107, A 108*
*A 55 *Discontinued—Replaced by E 30*
*A 56 *Discontinued*
*A 57 *Discontinued—Replaced by A 504*
*A 58 *Discontinued—Replaced by A 689*
*A 59 *Discontinued—Replaced by A 689*
*A 60 *Discontinued—Replaced by A 689*
*A 61 *Discontinued—Replaced by A 616*
*A 62 *Discontinued*
*A 63 *Discontinued—Replaced by A 237, A 238*
*A 64 *Discontinued—Replaced by E 30*
*A 65–68 Soft Steel Track Spikes, Spec. for, 4
*A 66–64(1970) Steel Screw Spikes, Spec. for, 4
*A 67–68a Low-Carbon Steel Tie Plates, Spec. for, 4
*A 68 *Discontinued—Replaced by A 689*
*A 69 *Discontinued*
*A 70 *Discontinued—Replaced by A 285*
*A 71 *Discontinued*
*A 72 *Discontinued*
*A 73 *Discontinued*
*A 74–75 Cast Iron Soil Pipe and Fittings, Spec. for, 2
*A 75 *Discontinued—Replaced by A 47*
*A 76–64(1970) Low-Carbon Steel Track Bolts and Nuts, Spec. for, 4
*A 77 *Discontinued*
*A 78 *Discontinued—Replaced by A 283*
*A 79 *Discontinued—Replaced by A 84*
*A 80 *Discontinued—Replaced by A 107, A 108*
*A 81 *Discontinued*
*A 82–76 Cold-Drawn Steel Wire for Concrete Reinforcement, Spec. for, 4
*A 83 *Discontinued—Replaced by A 192*
*A 84 *Discontinued*
*A 85 *Discontinued*
*A 86 *Discontinued*
*A 87 *Discontinued—Replaced by A 27*
*A 88 *Discontinued—Replaced by A 48*
*A 89 *Discontinued—Replaced by A 285*
*A 90–69(1973) Weight of Coating on Zinc-Coated (Galvanized) Iron or Steel Articles, Tests for, 3
*A 91 *Discontinued*
*A 92 *Discontinued*
*A 93 *Discontinued—Replaced by A 525*
*A 94 *Discontinued*
*A 95 *Discontinued—Replaced by A 216*
*A 96 *Discontinued—Replaced by A 193*
*A 97 *Discontinued*
*A 98–64(1974) Spiegeleisen, Spec. for, 2
*A 99–76 Ferromanganese, Spec. for, 2
*A 100–69(1974) Ferrosilicon, Spec. for, 2
*A 101–73 Ferrochromium, Spec. for, 2
*A 102–76 Ferrovanadium, Spec. for, 2
*A 103 *Discontinued—Replaced by E 32*
*A 104 *Discontinued—Replaced by E 31*
*A 105–77 Forgings, Carbon Steel, for Piping Components, Spec. for, 1
*A 106–77 Seamless Carbon Steel Pipe for High-Temperature Service, Spec. for, 1
*A 107 *Discontinued—Replaced by A 575, A 576*
*A 108–73 Steel Bars, Carbon, Cold-Finished, Standard Quality, Spec. for, 5
*A 109–72 Steel, Carbon, Cold-Rolled Strip, Spec. for, 3
*A 109M–77 Steel, Carbon, Cold-Rolled Strip, [Metric] Spec. for, 3
*A 110 *Discontinued—Replaced by A 90*
*A 111–66(1975) Zinc-Coated (Galvanized) "Iron" Telephone and Telegraph Line Wire, Spec. for, 3
*A 112–76 Zinc-Coated (Galvanized) Steel Tie Wires, Spec. for, 3
*A 113–75 Structural Steel for Locomotives and Cars, Spec. for, 4
*A 114 *Discontinued*
*A 115 *Discontinued*
*A 116–73 Zinc-Coated (Galvanized) Iron or Steel Farm-Field and Railroad Right-of-Way Wire Fencing, Spec. for, 3
*A 117 *Discontinued—Replaced by A 392*
*A 118 *Discontinued*
*A 119 *Discontinued—Replaced by E 44*
*A 120–77 Pipe, Steel, Black and Hot-Dipped Zinc-Coated (Galvanized) Welded and Seamless, for Ordinary Uses, Spec. for, 1
*A 121–77 Zinc-Coated (Galvanized) Steel Barbed Wire, Spec. for, 3
*A 122 *Discontinued—Replaced by A 475*
*A 123–73 Zinc (Hot-Galvanized) Coatings on Products Fabricated from Rolled, Pressed, and Forged Steel Shapes, Plates, Bars, and Strip, Spec. for, 3
*A 124 *Discontinued*
*A 125–73 Heat-Treated Steel Helical Springs, Spec. for, 5
A 126–73 Gray Iron Castings for Valves, Flanges, and Pipe Fittings, Spec. for, 2
*A 127 *Redesignated A 340*
*A 128–75a Austenitic Manganese Steel Castings, Spec. for, 2
*A 129 *Discontinued*
*A 130 *Discontinued—Replaced by E 30*
*A 131–75 Structural Steel for Ships, Spec. for, 4
*A 132–74 Ferromolybdenum, Spec. for, 2

*A 133 *Discontinued—Replaced by A 237, A 238*
*A 134–74 Electric-Fusion (Arc)-Welded Steel Plate Pipe (Sizes 16 in. and Over), Spec. for, 1
*A 135–73a Electric-Resistance-Welded Steel Pipe, Spec. for, 1
*A 136 *Discontinued*
*A 137 *Discontinued*
*A 138 *Discontinued*
*A 139–74 Electric-Fusion (Arc)-Welded Steel Pipe (Sizes 4 in. and over), Spec. for, 1
*A 140 *Discontinued*
*A 141 *Discontinued—Replaced by A 502*
*A 142 *Discontinued—Replaced by A 716*
*A 143–74 Safeguarding Against Embrittlement of Hot-Dip Galvanized Structural Steel Products and Procedure for Detecting Embrittlement, Rec. Practice for, 3
*A 144–73 Ferrotungsten, Spec. for, 2
*A 145 *Discontinued—Replaced by A 132*
*A 146–64(1974) Molybdenum Oxide Products, Spec. for, 2
*A 147–51(1971) Heat-Treated Steel Leaf Springs, Spec. for, 5
*A 148–73 High-Strength Steel Castings for Structural Purposes, Spec. for, 2
*A 149 *Discontinued*
*A 150 *Discontinued*
*A 151 *Discontinued*
*A 152 *Discontinued*
*A 153–73 Zinc Coating (Hot-Dip) on Iron and Steel Hardware, Spec. for, 3
*A 154 *Discontinued—Replaced by A 27*
*A 155 *Discontinued—Replaced by A 671, A 672, A 691*
*A 156 *Discontinued—Combined with A 146*
*A 157 *Discontinued—Replaced by A 217, A 351*
*A 158 *Discontinued—Replaced by A 335*
*A 159–77 Automotive Gray Iron Castings, Spec. for, 2
*A 160 *Discontinued—Replaced by A 617*
*A 161–75 Seamless Low-Carbon and Carbon-Molybdenum Steel Still Tubes for Refinery Service, Spec. for, 1
*A 162 *Discontinued*
*A 163 *Discontinued*
*A 164–71 Electrodeposited Coatings of Zinc on Steel, Spec. for, 3, 9
*A 165–71 Electrodeposited Coatings of Cadmium on Steel, Spec. for, 3, 9
*A 166 *Discontinued—Replaced by B 456*
*A 167–77 Stainless and Heat-Resisting Chromium-Nickel Steel Plate, Sheet, and Strip, Spec. for, 3
*A 168 *Discontinued—Replaced by A 296, A 297*
*A 169 *Discontinued—Replaced by A 296, A 297*
*A 170 *Discontinued—Replaced by A 296, A 297*
*A 171 *Discontinued—Replaced by A 296, A 297*
*A 172 *Discontinued—Replaced by A 296, A 297*
*A 173 *Discontinued—Replaced by A 296, A 297*
*A 174 *Discontinued—Replaced by A 296, A 297*
*A 175 *Discontinued—Replaced by A 296, A 297*
*A 176–77 Stainless and Heat-Resisting Chromium Steel Plate, Sheet, and Strip, Spec. for, 3
*A 177–69 High-Strength Stainless and Heat-Resisting Chromium-Nickel Steel Sheet and Strip, Spec. for, 3
*A 178–75 Electric-Resistance-Welded Carbon Steel Boiler Tubes, Spec. for, 1
*A 179–75 Seamless Cold-Drawn Low-Carbon Steel Heat-Exchanger and Condenser Tubes, Spec. for, 1
*A 180 *Discontinued—Replaced by A 27*
*A 181–77 Forgings, Carbon Steel for General Purpose Piping, Spec. for, 1
*A 182–77a Forged or Rolled Alloy-Steel Pipe Flanges, Forged Fittings, and Valves and Parts for High-Temperature Service, Spec. for, 1
*A 183–68 Heat-Treated Carbon Steel Track Bolts and Carbon Steel Nuts, Spec. for, 4
*A 184–74 Fabricated Deformed Steel Bar Mats for Concrete Reinforcement, Spec. for, 4
*A 185–73 Welded Steel Wire Fabric for Concrete Reinforcement, Spec. for, 4
*A 186 *Discontinued—Replaced by A 504*
*A 187 *Discontinued*
*A 188 *Discontinued*
*A 189 *Discontinued*
*A 190 *Discontinued*
*A 191 *Discontinued—Replaced by A 239*
*A 192–75 Seamless Carbon Steel Boiler Tubes for High-Pressure Service, Spec. for, 1
*A 193–77a Alloy-Steel and Stainless Steel Bolting Materials for High-Temperature Service, Spec. for, 1
*A 194–77a Carbon and Alloy Steel Nuts for Bolts for High-Pressure and High-Temperature Service, Spec. for, 1
*A 195 *Discontinued—Replaced by A 502*
*A 196 *Discontinued*
*A 197–47(1976) Cupola Malleable Iron, Spec. for, 2
*A 198 *Discontinued—Replaced by A 296, A 297*
*A 199–77 Seamless Cold-Drawn Intermediate Alloy-Steel Heat-Exchanger and Condenser Tubes, Spec. for, 1
*A 200–75 Seamless Intermediate Alloy-Steel Still Tubes for Refinery Service, Spec. for, 1
*A 201 *Discontinued—Replaced by A 515, A 516*
*A 202–77 Pressure Vessel Plates, Alloy Steel, Chromium-Manganese-Silicon, Spec. for, 4
*A 203–77 Pressure Vessel Plates, Alloy Steel, Nickel, Spec. for, 4
*A 204–74a Pressure Vessel Plates, Alloy Steel, Molybdenum, Spec. for, 4
*A 205 *Discontinued—Replaced by A 233, A 251*
*A 206 *Discontinued—Replaced by A 335*
*A 207 *Discontinued*
*A 208 *Discontinued—Replaced by A 239*
*A 209–76 Seamless Carbon-Molybdenum Alloy-Steel Boiler and Superheater Tubes, Spec. for, 1
*A 210–76a Seamless Medium-Carbon Steel Boiler and Superheater Tubes, Spec. for, 1
*A 211–75 Spiral-Welded Steel or Iron Pipe, Spec. for, 1
*A 212 *Discontinued—Replaced by A 515, A 516*
*A 213–76a Seamless Ferritic and Austenitic Alloy-Steel Boiler, Superheater, and Heat-Exchanger Tubes, Spec. for, 1
*A 214–75 Electric-Resistance-Welded Carbon Steel Heat-Exchanger and Condenser Tubes, Spec. for, 1
*A 215 *Discontinued—Replaced by A 27*
*A 216–77 Carbon-Steel Castings Suitable for Fusion Welding for High-Temperature Service, Spec. for, 1, 2
*A 217–77a Martensitic Stainless Steel and Alloy Steel Castings for Pressure-Containing Parts Suitable for High-Temperature Service, Spec. for, 1, 2
*A 218 *Discontinued—Replaced by A 475*
*A 219 *Discontinued—Replaced by B 487, B 499, B 504, B 529, B 530*
*A 220–76 Pearlitic Malleable Iron Castings, Spec. for, 2
*A 221 *Discontinued—Replaced by A 296, A 297*
*A 222 *Discontinued—Replaced by A 296, A 297*
*A 223 *Discontinued—Replaced by A 296, A 297*
*A 224 *Discontinued—Replaced by G 4*
*A 225–74b Pressure Vessel Plates, Alloy Steel, Manganese-Vanadium, Spec. for, 4
*A 226–75 Electric-Resistance-Welded Carbon Steel Boiler and Superheater Tubes for High-Pressure Service, Spec. for, 1
*A 227–77 Steel Wire, Hard-Drawn for Mechanical Springs, Spec. for, 3, 5
*A 228–77 Steel Wire, Music Spring Quality, Spec. for, 3, 5
*A 229–77 Steel Wire, Oil-Tempered for Mechanical Springs, Spec. for, 3, 5
*A 230–77 Steel Wire, Oil-Tempered Carbon Valve Spring Quality, Spec. for, 3, 5
*A 231–77 Chromium-Vanadium Alloy Steel Spring Wire, Spec. for, 3, 5
*A 232–77 Chromium-Vanadium Alloy Steel Valve Spring Quality Wire, Spec. for, 3, 5
*A 233 *Discontinued—Available from American Welding Society*
*A 234–77a Piping Fittings of Wrought Carbon Steel and Alloy Steel for Moderate and Elevated Temperatures, Spec. for, 1
*A 235 *Discontinued—Replaced by A 668*
*A 236–69a(1974) Carbon Steel Forgings for Railway Use, Spec. for, 4, 5
*A 237 *Discontinued—Replaced by A 668*
*A 238–71 Forgings, Alloy Steel, for Railway Use, Spec. for, 4, 5
A 239–73 Locating the Thinnest Spot in a Zinc (Galvanized) Coating on Iron or Steel Articles by the Preece Test (Copper Sulfate Dip), Test for, 3
*A 240–77 Heat-Resisting Chromium and Chromium-Nickel Stainless Steel Plate, Sheet, and Strip for Fusion-Welded Unfired Pressure Vessels, Spec. for, 3, 4
*A 241–68 Hot-Worked High-Carbon Steel Tie Plates, Spec. for, 4
*A 242–75 High-Strength Low-Alloy Structural Steel, Spec. for, 4
*A 243 *Discontinued—Replaced by A 668*
*A 244 *Discontinued—Replaced by A 504*
*A 245 *Discontinued—Replaced by A 570, A 611*
*A 246 *Discontinued—Replaced by A 245*

A 247–67(1972) Microstructure of Graphite in Iron Castings, Evaluating the, **2, 11**
A 248 Discontinued—Replaced by A 273, A 274
***A 249–77** Welded Austenitic Steel Boiler, Superheater, Heat-Exchanger, and Condenser Tubes, Spec. for, **1**
***A 250–75** Electric-Resistance-Welded Carbon-Molybdenum Alloy-Steel Boiler and Superheater Tubes, Spec. for, **1**
A 251 Discontinued—Available from American Welding Society
***A 252–77a** Welded and Seamless Steel Pipe Piles, Spec. for, **1**
A 253 Discontinued
***A 254–76** Copper Brazed Steel Tubing, Spec. for, **1**
***A 255–67**(1974) End-Quench Test for Hardenability of Steel **5**
***A 256–46**(1976) Compression Testing of Cast Iron **2**
A 257 Discontinued—Replaced by A 34
A 258 Discontinued—Replaced by A 34
A 259 Discontinued—Replaced by A 34
A 260 Discontinued
A 261 Discontinued
***A 262–77a** Susceptibility to Intergranular Attack in Stainless Steels, Rec. Practices for Detecting, **3, 10**
***A 263–77** Corrosion-Resisting Chromium Steel Clad Plate, Sheet, and Strip, Spec. for, **3, 4**
***A 264–77** Stainless Chromium-Nickel Steel Clad Plate, Sheet, and Strip, Spec. for, **3, 4**
***A 265–77** Nickel and Nickel-Base Alloy Clad Steel Plate, Spec. for, **3, 4**
***A 266–77a** Forgings, Carbon Steel, for Pressure Vessel Components, Spec. for, **1, 4, 5**
A 267 Discontinued
***A 268–77** Seamless and Welded Ferritic Stainless Steel Tubing for General Service, Spec. for, **1**
***A 269–76** Seamless and Welded Austenitic Stainless Steel Tubing for General Service, Spec. for, **1**
***A 270–75** Seamless and Welded Austenitic Stainless Steel Sanitary Tubing, Spec. for, **1**
***A 271–76** Seamless Austenitic Chromium-Nickel Steel Still Tubes for Refinery Service, Spec. for, **1**
A 272 Discontinued—Replaced by E 109
A 273 Discontinued—Replaced by A 711
A 274 Discontinued—Replaced by A 711
***A 275–77** Magnetic Particle Examination of Steel Forgings **5**
***A 276–77** Stainless and Heat-Resisting Steel Bars and Shapes, Spec. for, **5**
A 277 Discontinued—Replaced by A 338
A 278–75 Gray Iron Castings for Pressure-Containing Parts for Temperatures up to 650° F (345° C), Spec. for, **2**
A 279 Discontinued—Replaced by G 31
A 280 Discontinued—Replaced by A 336
A 281 Discontinued—Replaced by A 27
A 282 Discontinued—Replaced by A 148
***A 283–75** Low and Intermediate Tensile Strength Carbon Steel Plates of Structural Quality, Spec. for, **4**
***A 284–77** Low and Intermediate Tensile Strength Carbon-Silicon Steel Plates for Machine Parts and General Construction, Spec. for, **4**
***A 285–77** Pressure Vessel Plates, Carbon Steel, Low- and Intermediate-Tensile Strength, Spec. for, **4**
A 286 Discontinued—Replaced by A 434
A 287 Discontinued
***A 288–77** Carbon and Alloy Steel Forgings for Magnetic Retaining Rings for Turbine Generators, Spec. for, **5**
***A 289**(1977) Alloy Steel Forgings for Nonmagnetic Retaining Rings for Generators, Spec. for, **5**
***A 290–77** Carbon and Alloy Steel Forgings for Rings for Reduction Gears, Spec. for, **5**
***A 291–77** Carbon and Alloy Steel Forgings for Pinions and Gears for Reduction Gears, Spec. for, **5**
A 292 Discontinued—Replaced by A 469
***A 293–77a** Steel Forgings, Carbon and Alloy, for Turbine Rotors and Shafts, Spec. for, **5**
***A 294–77** Heat-Treated Alloy Steel Forgings for Turbine Wheels and Disks, Spec. for, **5**
***A 295–77** High-Carbon Ball and Roller Bearing Steel, Spec. for, **5**
***A 296–77** Corrosion-Resistant Iron-Chromium, Iron-Chromium-Nickel, and Nickel-Base Alloy Castings for General Application, Spec. for, **2**
***A 297–76** Heat-Resistant Iron-Chromium and Iron-Chromium-Nickel Alloy Castings for General Application, Spec. for, **2**
A 298 Discontinued—Available from American Welding Society

***A 299–77** Pressure Vessel Plates, Carbon Steel, Manganese-Silicon, Spec. for, **4**
A 300 Discontinued
A 301 Discontinued—Replaced by A 387
***A 302–77** Pressure Vessel Plates, Alloy Steel, Manganese-Molybdenum and Manganese-Molybdenum-Nickel, Spec. for, **4**
A 303 Discontinued—Replaced by A 570
***A 304–76** Alloy Steel Bars Subject to End-Quench Hardenability Requirements, Spec. for, **5**
A 305 Discontinued—Replaced by A 615, A 616, A 617
A 306 Discontinued—Replaced by A 663, A 675
***A 307–76b** Carbon Steel Externally and Internally Threaded Standard Fasteners, Spec. for, **1, 4**
***A 308–76** Steel, Sheet, Cold-Rolled, Long Terne Coated, Spec. for, **3**
***A 309–54**(1975) Weight and Composition of Coating on Long Terne Sheet by the Triple Spot Test, Test for, **3**
A 310 Redesignated A 345
***A 311–64**(1970) Stress Relief Annealed Cold-Drawn Carbon Steel Bars, Spec. for, **5**
***A 312–76** Seamless and Welded Austenitic Stainless Steel Pipe, Spec. for, **1**
***A 313–76** Chromium-Nickel Stainless and Heat-Resisting Steel Spring Wire, Spec. for, **3, 5**
***A 314–76** Stainless and Heat-Resisting Steel Billets and Bars for Forging, Spec. for, **5**
A 315 Discontinued—Replaced by A 335
A 316 Discontinued—Available from American Welding Society
A 317 Discontinued—Replaced by E 381
A 318 Discontinued—Replaced by A 370
***A 319–71**(1975) Gray Iron Castings for Elevated Temperatures for Non-Pressure Containing Parts, Spec. for, **2**
***A 320–77a** Alloy-Steel Bolting Materials for Low-Temperature Service, Spec. for, **1**
***A 321–74** Steel Bars, Carbon, Quenched and Tempered, Spec. for, **5**
***A 322–76** Hot-Rolled Alloy Steel Bars, Spec. for, **5**
***A 323–76** Ferroboron, Spec. for, **2**
***A 324–73** Ferrotitanium, Spec. for, **2**
***A 325–76c** High-Strength Bolts for Structural Steel Joints, Including Suitable Nuts and Plain Hardened Washers, Spec. for, **4**
***A 326–67**(1976) Zinc-Coated (Galvanized) High Tensile Steel Telephone and Telegraph Line Wire, Spec. for, **3**
A 327–72 Impact Testing of Cast Irons **2**
***A 328–75a** Steel Sheet Piling, Spec. for, **4**
A 329 Discontinued—Replaced by A 551
A 330 Discontinued—Replaced by A 370
***A 331–74** Steel Bars, Alloy, Cold-Finished, Spec. for, **5**
A 332 Discontinued—Replaced by A 689
***A 333–77** Seamless and Welded Steel Pipe for Low-Temperature Service, Spec. for, **1**
***A 334–77** Seamless and Welded Carbon and Alloy-Steel Tubes for Low-Temperature Service, Spec. for, **1**
***A 335–76** Seamless Ferritic Alloy Steel Pipe for High-Temperature Service, Spec. for, **1**
***A 336–77a** Alloy Steel Forgings Pressure and High-Temperature Parts, Spec. for, **1, 4, 5**
A 337 Discontinued—Replaced by A 392
A 338–61(1977) Malleable Iron Flanges, Pipe Fittings, and Valve Parts for Railroad, Marine, and Other Heavy Duty Service at Temperatures up to 650° F (345° C), Spec. for, **2**
A 339 Discontinued—Replaced by A 536
A 340–77 Magnetic Testing, Def. of Terms, Symbols, and Conversion Factors Relating to, **44**
A 341–69(1974) Direct-Current Magnetic Properties of Materials Using D-C Permeameters and the Ballistic Test Methods, Test for, **44**
***A 342–64**(1976) Permeability of Feebly Magnetic Materials, Tests for, **44**
***A 343–69**(1974) Alternating-Current Magnetic Properties of Materials at Power Frequencies Using the Wattmeter-Ammeter-Voltmeter Method and 25-cm Epstein Frame, Test for, **44**
***A 344–68**(1972) Electrical and Mechanical Properties of Magnetic Materials, Tests for, **44**
A 345–75 Flat-Rolled Electrical Steels for Magnetic Applications, Spec. for, **3, 44**
***A 346–74** Alternating-Current Magnetic Performance of Laminated Core Specimens Using the Modified Hay Bridge Method, Tests for, **44**
***A 347–74** Alternating-Current Magnetic Properties of Materials Using the Modified Hay Bridge Method with 25-cm Epstein Frame, Test for, **44**
***A 348–68**(1977) Alternating-Current Magnetic Properties of Materials Using the Wattmeter-Ammeter-Voltmeter Method, 100 to 10,000 Hz and 25-cm Epstein Frame, Test for, **44**
***A 349–68**(1977) Alternating-Current Magnetic Properties of Materials Using the Wattmeter-Ammeter-Voltmeter Method, 50 to 60 Hz and 50-cm Epstein Frame, Test for, **44**
***A 350–77a** Forgings, Carbon and Low-Alloy Steel, Requiring Notch Toughness Testing for Piping Components, Spec. for, **1**
***A 351–77** Austenitic Steel Castings for High-Temperature Service, Spec. for, **1, 2**
***A 352–77** Ferritic Steel Castings for Pressure-Containing Parts Suitable for Low-Temperature Service, Spec. for, **1, 2**
***A 353–74** Pressure Vessel Plates, Alloy Steel, 9 Percent Nickel, Double-Normalized and Tempered, Spec. for, **4**
***A 354–77** Quenched and Tempered Alloy Steel Bolts, Studs, and Other Externally Threaded Fasteners, Spec. for, **1, 4**
A 355 Discontinued
***A 356–77** Heavy-Walled Carbon and Low-Alloy Steel Casting for Steam Turbines, Spec. for, **2**
A 357 Discontinued—Replaced by A 387
***A 358–77a** Electric-Fusion-Welded Austenitic Chromium-Nickel Alloy Steel Pipe for High-Temperature Service, Spec. for, **1**
A 359 Discontinued—Replaced by A 370
A 360 Discontinued
***A 361–76** Steel Sheet, Zinc-Coated (Galvanized) by the Hot-Dip Process for Roofing and Siding, Spec. for, **3**
A 362 Discontinued
A 363–72(1976) Zinc-Coated (Galvanized) Steel Overhead Ground Wire Strand, Spec. for, **3**
A 364 Discontinued—Replaced by A 434
A 365 Discontinued—Replaced by A 619, A 620
***A 366–72** Steel, Carbon, Cold-Rolled Sheet, Commercial Quality, Spec. for, **3**
***A 367–60**(1972) Chill Testing of Cast Iron **2**
***A 368–76** Stainless and Heat-Resisting Steel Wire Strand, Spec. for, **3**
***A 369–76** Ferritic Alloy Steel Forged and Bored Pipe for High-Temperature Service, Spec. for, **1**
***A 370–77** Mechanical Testing of Steel Products, Methods and Def. for, **1, 2, 3, 4, 5, 10**
A 371 Discontinued—Available from American Welding Society
***A 372–77** Carbon and Alloy Steel Forgings for Thin-Walled Pressure Vessels, Spec. for, **4, 5**
A 373 Discontinued—Combined with A 36
A 374 Discontinued—Replaced by A 606, A 607
A 375 Discontinued—Replaced by A 606, A 607
***A 376–77** Seamless Austenitic Steel Pipe for High-Temperature Central-Station Service, Spec. for, **1**
***A 377–77** Gray Iron and Ductile Iron Pressure Pipe, Spec. for, **2**
A 378 Discontinued—Replaced by A 345
A 379 Discontinued—Replaced by A 345
***A 380–72** Cleaning and Descaling Stainless Steel Parts, Equipment, and Systems, Rec. Practice for, **3**
***A 381–76** Metal-Arc-Welded Steel Pipe for Use with High-Pressure Transmission Systems, Spec. for, **1**
A 382 Discontinued
***A 383–77a** Axles, Railway, Carbon Steel, Untreated for Export and General Industrial Use, Spec. for, **4, 5**
***A 384–76** Safeguarding Against Warpage and Distortion During Hot-Dip Galvanizing of Steel Assemblies, Rec. Practice for, **3**
***A 385–76** High-Quality Zinc Coatings (Hot-Dip), Rec. Practice for Providing, **3**
***A 386–73** Zinc Coating (Hot-Dip) on Assembled Steel Products, Spec. for, **3**
***A 387–77b** Pressure Vessel Plates, Alloy Steel, Chromium-Molybdenum, Spec. for, **4**
***A 388–77** Ultrasonic Examination of Heavy Steel Forgings, Rec. Practice for, **5**
***A 389–77a** Alloy Steel Castings Specially Heat-Treated for Pressure-Containing Parts Suitable for High-Temperature Service, Spec. for, **1, 2**
***A 390–66**(1975) Zinc-Coated (Galvanized) Steel Poultry Netting (Hexagonal and Straight Line) and Woven Steel Poultry Fencing, Spec. for, **3**
***A 391–65**(1975) Alloy Steel Chain, Spec. for, **5**
***A 392–74** Zinc-Coated Steel Chain-Link Fence Fabric, Spec. for, **3**

A 393 Discontinued—Replaced by A 262
***A 394–76** Galvanized Steel Transmission Tower Bolts and Nuts, Spec. for, **4**
***A 395–77** Ferritic Ductile Iron Pressure-Retaining Castings for Use at Elevated Temperatures, Spec. for, **2**
A 396 Discontinued—Replaced by A 536
A 397 Discontinued
A 398 Discontinued—Available from American Welding Society
A 399 Discontinued—Available from American Welding Society
***A 400–69**(1977) Selection of Steel Bar Compositions According to Section, Rec. Practice for, **5**
***A 401–77** Chromium-Silicon Alloy Steel Spring Wire, Spec. for, **3, 5**
A 402 Discontinued
***A 403–77** Wrought Austenitic Stainless Steel Piping Fittings, Spec. for, **1**
A 404 Discontinued
***A 405–70**(1976) Seamless Ferritic Alloy-Steel Pipe Specially Heat Treated for High-Temperature Service, Spec. for, **1**
A 406 Discontinued
***A 407–77** Steel Wire, Hard-Drawn, for Coiled-Type Springs, Spec. for, **3, 5**
A 408 Discontinued—Replaced by A 615
***A 409–77** Welded Large Outside Diameter Light-Wall Austenitic Chromium-Nickel Alloy Steel Pipe for Corrosive or High-Temperature Service, Spec. for, **1**
A 410 Discontinued
***A 411–65**(1976) Zinc-Coated (Galvanized) Low-Carbon Steel Armor Wire, Spec. for, **3**
***A 412–75** Stainless and Heat-Resisting Chromium-Nickel-Manganese Steel Plate, Sheet, and Strip, Spec. for, **3**
***A 413–72** Carbon Steel Chain, Spec. for, **5**
***A 414–71** Carbon Steel Sheets for Pressure Vessels, Spec. for, **3, 4**
A 415 Discontinued—Replaced by A 569
***A 416–74** Uncoated Seven-Wire Stress-Relieved Strand for Prestressed Concrete, Spec. for, **4**
***A 417–74** Steel Wire, Hard-Drawn, for Zig-Zag, Square-Formed, and Sinuous-Type Upholstery Spring Units, Spec. for, **3, 5**
***A 418–77** Ultrasonic Inspection of Turbine and Generator Steel Rotor Forgings **5**
A 419 Discontinued
***A 420–77a** Piping Fittings of Wrought Carbon Steel and Alloy Steel for Low-Temperature Service, Spec. for, **1**
***A 421–77** Uncoated Stress-Relieved Wire for Prestressed Concrete, Spec. for, **4**
***A 422–64**(1973) Butt Welds in Still Tubes for Refinery Service, Spec. for, **1**
***A 423–75** Seamless and Electric Welded Low-Alloy Steel Tubes, Spec. for, **1**
***A 424–73** Steel Sheet for Porcelain Enameling, Spec. for, **3**
A 425 Discontinued—Replaced by A 569
***A 426–76** Centrifugally Cast Ferritic Alloy Steel Pipe for High-Temperature Service, Spec. for, **1**
***A 427–74** Wrought Alloy Steel Rolls for Cold and Hot Reduction, Spec. for, **5**
A 428–68(1973) Weight of Coating on Aluminum-Coated Iron or Steel Articles, Test for, **3**
A 429 Discontinued—Replaced by A 276
***A 430–77** Austenitic Steel Forged and Bored Pipe for High-Temperature Service, Spec. for, **1**
A 431 Discontinued—Replaced by A 615
A 432 Discontinued—Replaced by A 615
A 433 Discontinued
***A 434–76** Steel Bars, Alloy, Hot-Rolled or Cold-Finished, Quenched and Tempered, Spec. for, **5**
***A 435–75** Straight-Beam Ultrasonic Examination of Steel Plates for Pressure Vessels, Spec. for, **4**
A 436–72a Austenitic Gray Iron Castings, Spec. for, **2**
***A 437–77** Alloy-Steel Turbine-Type Bolting Material Specially Heat Treated for High-Temperature Service, Spec. for, **1**
A 438–62(1974) Transverse Testing of Gray Cast Iron **2**
A 439–77 Austenitic Ductile Iron Castings, Spec. for, **2**
***A 440–77** High-Strength Structural Steel, Spec. for, **4**
***A 441–77** High-Strength Low-Alloy Structural Manganese Vanadium Steel, Spec. for, **4**
***A 442–77a** Pressure Vessel Plates, Carbon Steel, Improved Transition Properties, Spec. for, **4**
A 443 Discontinued—Combined with A 370
***A 444–76** Steel Sheet, Zinc-Coated (Galvanized) by the Hot-Dip Process for Culverts and Underdrains, Spec.

for, 3

A 445 Discontinued—Replaced by A 395

***A 446–76** Steel Sheet, Zinc-Coated (Galvanized) by the Hot-Dip Process, Structural (Physical) Quality, Spec. for, 3

***A 447–74** Chromium-Nickel-Iron Alloy Castings (25-12 Class) for High-Temperature Service, Spec. for, 2

A 448 Discontinued

***A 449–77** Quenched and Tempered Steel Bolts and Studs, Spec. for, 4

***A 450–76a** Carbon, Ferritic Alloy, and Austenitic Alloy Steel Tubes, Spec. for General Requirements for, 1

***A 451–77a** Centrifugally Cast Austenitic Steel Pipe for High-Temperature Service, Spec. for, 1

***A 452–75** Centrifugally Cast Austenitic Steel Cold-Wrought Pipe for High-Temperature Service, Spec. for, 1

***A 453–77a** Bolting Materials, High-Temperature, 50 to 120 ksi Yield Strength, with Expansion Coefficients Comparable to Austenitic Steels, Spec. for, 1

***A 454–72** Steel Conveyor Chain, Spec. for, 5

***A 455–77a** Pressure Vessel Plates, Carbon Steel, High Strength Manganese, Spec. for, 1, 4

***A 456–71**(1976) Magnetic Particle Inspection of Large Crankshaft Forgings, Spec. for, 5

***A 457–71** Hot-Worked, Hot-Cold-Worked, and Cold-Worked Alloy Steel Plate, Sheet, and Strip for High Strength at Elevated Temperatures, Spec. for, 3

***A 458–71** Hot-Worked, Hot-Cold-Worked, and Cold-Worked Alloy Steel Bars for High Strength at Elevated Temperatures, Spec. for, 5

***A 459–71**(1975) Zinc-Coated Flat Steel Armoring Tape, Spec. for, 3

***A 460–68**(1976) Copper-Clad Steel Wire Strand, Spec. for, 3

A 461 Discontinued—Replaced by A 564, A 637, A 638, A 639

A 462 Discontinued—Replaced by E 165

***A 463–77** Steel Sheet, Cold-Rolled, Aluminum-Coated Type 1, Spec. for, 3

A 464 Discontinued—Replaced by E 376

A 465 Discontinued

***A 466–73** Weldless Carbon Steel Chain, Spec. for, 5

***A 467–72** Machine and Coil Chain, Spec. for, 5

A 468 Discontinued—Replaced by A 6 and A 341

***A 469–77** Vacuum-Treated Steel Forgings for Generator Rotors, Spec. for, 5

***A 470–77** Vacuum-Treated Carbon and Alloy Steel Forgings for Turbine Rotors and Shafts, Spec. for, 5

***A 471–77** Vacuum-Treated Alloy Steel Forgings for Turbine Rotor Disks and Wheels, Spec. for, 5

***A 472–74** Heat Stability of Steam Turbine Shafts and Rotor Forgings, Test for, 5

***A 473–76** Stainless and Heat-Resisting Steel Forgings, Spec. for, 5

A 474–68(1976) Aluminum-Coated Steel Wire Strand, Spec. for, 3

***A 475–72a**(1976) Zinc-Coated Steel Wire Strand, Spec. for, 3

***A 476–70**(1976) Ductile Iron Castings for Paper Mill Dryer Rolls, Spec. for, 2

***A 477–71** Hot-Worked, Hot-Cold-Worked and Cold-Worked Alloy Steel Forgings and Forging Billets for High Strength at Elevated Temperatures, Spec. for, 5

***A 478–76** Chromium-Nickel Stainless and Heat-Resisting Steel Weaving Wire, Spec. for, 3

***A 479–77** Stainless and Heat-Resisting Steel Bars and Shapes for Use in Boilers and Other Pressure Vessels, Spec. for, 4, 5

***A 480–75** Flat-Rolled Stainless and Heat-Resisting Steel Plate, Sheet, and Strip, Spec. for General Requirements for, 3

***A 481–73** Chromium Metal, Spec. for, 2

***A 482–76** Ferrochrome-Silicon, Spec. for, 2

***A 483–64**(1974) Silicomanganese, Spec. for, 2

***A 484–76** Stainless and Heat-Resisting Wrought Steel Products (Except Wire), Spec. for General Requirements for, 5

***A 485–75** High Hardenability Bearing Steels, Spec. for, 5

***A 486–74** Steel Castings for Highway Bridges, Spec. for, 2

***A 487–76** Steel Castings Suitable for Pressure Service, Spec. for, 1, 2

***A 488–77a** Qualification of Procedures and Personnel for the Welding of Steel Castings, Rec. Practice for, 2

***A 489–72** Carbon Steel Eyebolts, Spec. for, 4

***A 490–77** Quenched and Tempered Alloy Steel Bolts for Structural Steel Joints, Spec. for, 4

***A 491–74** Aluminum-Coated Steel Chain-Link Fence Fabric, Spec. for, 3

***A 492–76** Stainless and Heat-Resisting Steel Rope Wire, Spec. for, 3

***A 493–76** Stainless and Heat-Resisting Steel for Cold Heading and Cold Forging—Bar and Wire, Spec. for, 3

***A 494–76** Nickel and Nickel Alloy Castings, Spec. for, 2, 8

***A 495–76** Calcium-Silicon and Calcium-Manganese-Silicon, Spec. for, 2

***A 496–72** Deformed Steel Wire for Concrete Reinforcement, Spec. for, 4

***A 497–72** Welded Deformed Steel Wire Fabric for Concrete Reinforcement, Spec. for, 4

***A 498–68**(1973) Seamless and Welded Carbon, Ferritic, and Austenitic Alloy Steel Heat-Exchanger Tubes with Integral Fins, Spec. for, 1

***A 499–76** Hot-Rolled Rail Carbon Steel Bars and Shapes, Spec. for, 5

***A 500–77** Cold-Formed Welded and Seamless Carbon Steel Structural Tubing in Rounds and Shapes, Spec. for, 1, 4

***A 501–76** Hot-Formed Welded and Seamless Carbon Steel Structural Tubing, Spec. for, 1, 4

***A 502–76** Steel Structural Rivets, Spec. for, 4

***A 503–75** Ultrasonic Examination of Large Forged Crankshafts, Spec. for, 5

***A 504–77** Wrought Carbon Steel Wheels, Spec. for, 4

***A 505–75** Steel Sheet and Strip, Alloy, Hot-Rolled and Cold-Rolled, Spec. for General Requirements for, 3

***A 506–73** Steel Sheet and Strip, Alloy, Hot-Rolled and Cold-Rolled, Regular Quality, Spec. for, 3

***A 507–73** Steel Sheet and Strip, Alloy, Hot-Rolled and Cold-Rolled, Drawing Quality, Spec. for, 3

***A 508–77** Quenched and Tempered Vacuum-Treated Carbon and Alloy Steel Forgings for Pressure Vessels, Spec. for, 4, 5

***A 509–68**(1974) Steel Forging, Def. of, 5

***A 510–77** General Requirements for Wire Rods and Coarse Round Wire, Carbon Steel, Spec. for, 3

A 510M–77 General Requirements for Wire Rods and Coarse Round Wire, Carbon Steel [Metric], Spec. for, 3

***A 511–77b** Seamless Stainless Steel Mechanical Tubing, Spec. for, 1

***A 512–77a** Cold-Drawn Buttweld Carbon Steel Mechanical Tubing, Spec. for, 1

***A 513–77** Electric-Resistance-Welded Carbon and Alloy Steel Mechanical Tubing, Spec. for, 1

***A 514–77** High-Yield-Strength, Quenched and Tempered Alloy Steel Plate, Suitable for Welding, Spec. for, 4

***A 515–74b** Pressure Vessel Plates, Carbon Steel, for Intermediate- and Higher-Temperature Service, Spec. for, 4

***A 516–77** Pressure Vessel Plates, Carbon Steel, for Moderate- and Lower-Temperature Service, Spec. for, 4

***A 517–77** Pressure Vessel Plates, Alloy Steel, High-Strength, Quenched and Tempered, Spec. for, 4

***A 518–64**(1974) Corrosion-Resistant High-Silicon Cast Iron, Spec. for, 2

***A 519–77b** Seamless Carbon and Alloy Steel Mechanical Tubing, Spec. for, 1

***A 520–72** Seamless and Electric-Resistance-Welded Carbon Steel Tubular Products for High-Temperature Service Conforming to ISO Recommendations for Boiler Construction, Spec. for Supplementary Requirements for, 1

***A 521–77** Steel, Closed-Impression Die Forgings for General Industrial Use, Spec. for, 5

***A 522–76** Forged or Rolled 8 and 9% Nickel Alloy Steel Flanges, Fittings, Valves, and Parts for Low-Temperature Service, Spec. for, 1

***A 523–73** Plain End Seamless and Electric-Resistance-Welded Steel Pipe for High-Pressure Pipe-Type Cable Circuits, Spec. for, 1

***A 524–76** Seamless Carbon Steel Pipe for Atmospheric and Lower Temperatures, Spec. for, 1

***A 525–77** Steel Sheet, Zinc-Coated (Galvanized) by the Hot-Dip Process, General Requirements, Spec. for, 3

***A 526–71**(1975) Steel Sheet, Zinc-Coated (Galvanized) by the Hot-Dip Process, Commercial Quality, Spec. for, 3

***A 527–71**(1975) Steel Sheet, Zinc-Coated (Galvanized) by the Hot-Dip Process, Lock-Forming Quality, Spec. for, 3

***A 528–71**(1975) Steel Sheet, Zinc-Coated (Galvanized) by the Hot-Dip Process, Drawing Quality, Spec. for, 3

***A 529–75** Structural Steel with 42,000 psi (290 MPa) Minimum Yield Point (½ in. (12.7 mm) Maximum Thickness), Spec. for, 4

***A 530–76** Specialized Carbon and Alloy Steel Pipe, Spec. for General Requirements for, 1

***A 531–74** Ultrasonic Inspection of Turbine-Generator Steel Retaining Rings, Rec. Practice for, 5

A 532–75a Abrasion-Resistant Cast Irons, Spec. for, 2

***A 533–77** Pressure Vessel Plates, Alloy Steel, Quenched and Tempered, Manganese-Molybdenum and Manganese-Molybdenum-Nickel, Spec. for, 4

***A 534–76** Carburizing Steels for Anti-Friction Bearings, Spec. for, 5

***A 535–65**(1977) Special-Quality Ball and Roller Bearing Steel, Spec. for, 5

A 536–77 Ductile Iron Castings, Spec. for, 2

***A 537–77** Pressure Vessel Plates, Heat-Treated, Carbon-Manganese-Silicon Steel, Spec. for, 4

***A 538–77** Pressure Vessel Plates, Alloy Steel, Precipitation Hardening (Maraging), 18 Percent Nickel, Spec. for, 4

***A 539–73** Electric-Resistance-Welded Coiled Steel Tubing for Gas and Fuel Oil Lines, Spec. for, 1

***A 540–77a** Alloy-Steel Bolting Materials for Special Applications, Spec. for, 1, 45

***A 541–76** Steel Forgings, Carbon and Alloy, Quenched and Tempered, for Pressure Vessel Components, Spec. for, 4, 5

***A 542–77** Pressure Vessel Plates, Alloy Steel, Quenched and Tempered Chromium-Molybdenum, Spec. for, 4

***A 543–77** Pressure Vessel Plates, Alloy Steel, Quenched and Tempered Nickel-Chromium-Molybdenum, Spec. for, 4

***A 544–77** Steel Wire, Carbon, Scrapless Nut Quality, Spec. for, 3

***A 545–77** Steel Wire, Carbon, Cold-Heading Quality, for Machine Screws, Spec. for, 3

***A 546–77** Steel Wire, Medium-High-Carbon, Cold-Heading Quality, for Hexagon-Head Bolts, Spec. for, 3

***A 547–77** Steel Wire, Alloy, Cold-Heading Quality, for Hexagon-Head Bolts, Spec. for, 3

***A 548–77** Steel Wire, Carbon, Cold-Heading Quality, for Tapping or Sheet Metal Screws, Spec. for, 3

***A 549–77** Steel Wire, Carbon, Cold-Heading Quality, for Wood Screws, Spec. for, 3

***A 550–73** Ferrocolumbium, Spec. for, 2

***A 551–65**(1976) Steel Tires, Spec. for, 4

A 552 Discontinued—Replaced by A 689

***A 553–74** Pressure Vessel Plates, Alloy Steel, Quenched and Tempered 8 and 9 Percent Nickel, Spec. for, 4

***A 554–77** Welded Stainless Steel Mechanical Tubing, Spec. for, 1

***A 555–76** Stainless and Heat-Resisting Steel Wire, Spec. for General Requirements for, 3

***A 556–76** Seamless Cold-Drawn Carbon Steel Feedwater Heater Tubes, Spec. for, 1

***A 557–76** Electric-Resistance-Welded Carbon Steel Feedwater Heater Tubes, Spec. for, 1

A 558 Discontinued—Available from American Welding Society

A 559 Discontinued—Available from American Welding Society

***A 560–74** Chromium-Nickel Alloy Castings, Spec. for, 2

***A 561–71** Macroetch Testing of Tool Steel Bars, Rec. Practice for, 5

***A 562–77** Pressure Vessel Plates, Carbon Steel, Manganese-Titanium for Glass or Diffused Metallic Coatings, Spec. for, 4

***A 563–76a** Carbon Steel Nuts, Spec. for, 1, 4

***A 564–74** Hot-Rolled and Cold-Finished Age-Hardening Stainless and Heat-Resisting Steel Bars and Shapes, Spec. for, 5

***A 565–74** Martensitic Stainless Steel Bars, Forgings, and Forging Stock for High-Temperature Service, Spec. for, 5

***A 566–68**(1977) Alternating-Current Magnetic Properties of Materials Using Alternating Current Potentiometer and 25-cm Epstein Frame, Test for, 44

***A 567–74** Iron, Cobalt, and Nickel-Base Alloy Castings for High Strength at Elevated Temperatures, Spec. for, 2

***A 568–74** Steel, Carbon and High-Strength Low-Alloy Hot-Rolled Sheet, Hot-Rolled Strip, and Cold-Rolled Sheet, General Requirements, Spec. for, 3

A 568M–77 Steel, Carbon and High-Strength Low-Alloy Hot-Rolled Sheet and Cold-Rolled Sheet, General Requirements [Metric], Spec. for, 3

***A 569–72** Steel, Carbon (0.15 Maximum, Percent), Hot-Rolled Sheet and Strip, Commercial Quality, Spec. for, 3

***A 570–75** Hot-Rolled Carbon Steel Sheet and Strip, Structural Quality, Spec. for, 3, 4

***A 571–71**(1976) Austenitic Ductile Iron Castings for Pressure-Containing Parts Suitable for Low-Temperature Service, Spec. for, 2

***A 572–77a** High-Strength Low-Alloy Columbium-Vanadium Steels of Structural Quality, Spec. for, 4

***A 573–77** Structural Carbon Steel Plates of Improved Toughness, Spec. for, 4

***A 574–77** Alloy Steel Socket-Head Cap Screws, Spec. for, 4

***A 575–73** Merchant Quality Hot-Rolled Carbon Steel Bars, Spec. for, 5

***A 576–74** Steel Bars, Carbon, Hot-Rolled, Special Quality, Spec. for, 5

***A 577–77** Ultrasonic Angle-Beam Examination of Steel Plates, Spec. for, 4

***A 578–77c** Straight-Beam Ultrasonic Examination of Plain and Clad Steel Plates for Special Applications, Spec. for, 4

***A 579–77** Superstrength Alloy Steel Forgings, Spec. for, 5

***A 580–77** Stainless and Heat-Resisting Steel Wire, Spec. for, 3

***A 581–75** Free-Machining Stainless and Heat-Resisting Steel Wire, Spec. for, 3

***A 582–75** Free-Machining Stainless and Heat-Resisting Steel Bars, Hot-Rolled or Cold-Finished, Spec. for, 5

***A 583–77** Cast Steel Wheels for Railway Service, Spec. for, 4

***A 584–68**(1976) Aluminum-Coated Steel Farm-Field and Right-of-Way Fencing, Spec. for, 3

***A 585–71**(1975) Aluminum-Coated Steel Barbed Wire, Spec. for, 3

***A 586–68**(1976) Zinc-Coated Steel Structural Strand, Spec. for, 3

***A 587–73** Electric-Welded Low-Carbon Steel Pipe for the Chemical Industry, Spec. for, 1

***A 588–77a** High-Strength Low-Alloy Structural Steel with 50 000 psi Minimum Yield Point to 4 in. Thick, Spec. for, 4

***A 589–73** Seamless and Welded Carbon Steel Water Well Pipe, Spec. for, 1

***A 590–72a**(1977) Pressure Vessel Plates, Alloy Steel, Precipitation Hardening (Maraging), 12 Percent Nickel, Spec. for, 4

***A 591–77** Steel Sheet, Cold-Rolled, Electrolytic Zinc-Coated, Spec. for, 3

***A 592–74** High-Strength Quenched and Tempered Low-Alloy Steel Forged Fittings and Parts for Pressure Vessels, Spec. for, 4, 5

A 593 Discontinued

***A 594–69**(1975) Carbon Steel Forgings with Special Magnetic Characteristics, Spec. for, 5

***A 595–74** Steel Tubes, Low-Carbon, Tapered for Structural Use, Spec. for, 1, 4

***A 596–69**(1974) Direct-Current Magnetic Properties of Materials Using Ring Test Procedures and the Ballistic Methods, Test for, 44

***A 597–75** Cast Tool Steel, Spec. for, 2

***A 598–69**(1974) Magnetic Properties of Magnetic Amplifier Cores, Test for, 44

***A 599–77** Steel Sheet, Cold-Rolled, Tin-Coated by Electrodeposition, Spec. for, 3

***A 600–76** High-Speed Tool Steel, Spec. for, 5

***A 601–69**(1974) Electrolytic Manganese Metal, Spec. for, 2

***A 602–70**(1976) Automotive Malleable Iron Castings, Spec. for, 2

A 603–70(1974) Zinc-Coated Steel Structural Wire Rope, Spec. for, 3

***A 604–77** Macroetch Testing of Consumable Electrode Remelted Steel Bars and Billets 3, 5

***A 605–72**(1977) Pressure Vessel Plates, Alloy Steel, Quenched and Tempered Nickel-Cobalt-Molybdenum-Chromium, Spec. for, 4

***A 606–75** Steel Sheet and Strip, Hot-Rolled and Cold-Rolled, High-Strength, Low-Alloy, with Improved Corrosion Resistance, Spec. for, 3

***A 607–75** Steel Sheet and Strip, Hot-Rolled and Cold-Rolled, High-Strength, Low-Alloy Columbium and/or Vanadium, Spec. for, 3

***A 608–70**(1976) Centrifugally Cast Iron-Chromium-Nickel High-Alloy Tubing for Pressure Application at High

EXHIBIT 7

1979 Annual Book of ASTM Standards

Index

*A 254–78 Copper Brazed Steel Tubing, Spec. for, 1
*A 255–67(1974) End-Quench Test for Hardenability of Steel, 5
*A 256–46(1976) Compression Testing of Cast Iron, 2
A 257 *Discontinued—Replaced by A 34*
A 258 *Discontinued—Replaced by A 34*
A 259 *Discontinued—Replaced by A 34*
A 260 *Discontinued*
A 261 *Discontinued*
*A 262–77a Susceptibility to Intergranular Attack in Stainless Steels, Rec.Practices for Detecting, 3, 10
*A 263–77 Corrosion-Resisting Chromium Steel Clad Plate, Sheet, and Strip, Spec. for, 3, 4
*A 264–77 Stainless Chromium-Nickle Steel Clad Plate, Sheet, and Strip, Spec. for, 3, 4
*A 265–77 Nickel and Nickel-Base Alloy Clad Steel Plate, Spec. for, 3, 4
*A 266–78 Forgings, Carbon Steel, for Pressure Vessel Components, Spec. for, 1, 4, 5
A 267 *Discontinued*
*A 268–77 Seamless and Welded Ferritic Stainless Steel Tubing for General Service, Spec. for, 1
*A 269–76 Seamless and Welded Austenitic Stainless Steel Tubing for General Service, Spec. for, 1
*A 270–75 Seamless and Welded Austenitic Stainless Steel Sanitary Tubing, Spec. for, 1
*A 271–76 Seamless Austenitic Chromium-Nickel Steel Still Tubes for Refinery Service, Spec. for, 1
A 272 *Discontinued—Replaced by E 109*
A 273 *Discontinued—Replaced by A 711*
A 274 *Discontinued—Replaced by A 711*
*A 275–78 Magnetic Particle Examination of Steel Forgings, 5
*A 276–78 Stainless and Heat-Resisting Steel Bars and Shapes, Spec. for, 5
A 277 *Discontinued—Replaced by A 338*
*A 278–75 Gray Iron Castings for Pressure-Containing Parts for Temperatures Up to 650°F (345°C), Spec. for, 2
A 279 *Discontinued—Replaced by G 31*
A 280 *Discontinued—Replaced by A 335*
A 281 *Discontinued—Replaced by A 27*
A 282 *Discontinued—Replaced by A 148*
*A 283–78 Low and Intermediate Tensile Strength Carbon Steel Plates, Shapes and Bars, Spec. for, 4
*A 284–77 Low and Intermediate Tensile Strength Carbon-Silicon Steel Plates for Machine Parts and General Construction, Spec. for, 4
*A 285–78 Pressure Vessel Plates, Carbon Steel, Low- and Intermediate-Tensile Strength, Spec. for, 4
A 286 *Discontinued—Replaced by A 434*
A 287 *Discontinued*
*A 288–77 Carbon and Alloy Steel Forgings for Magnetic Retaining Rings for Turbine Generators, Spec. for, 5
*A 289(1977) Alloy Steel Forgings for Nonmagnetic Retaining Rings for Generators, Spec. for, 5
*A 290–78 Carbon and Alloy Steel Forgings for Rings for Reduction Gears, Spec. for, 5
*A 291–78 Carbon and Alloy Steel Forgings for Pinions and Gears for Reduction Gears, Spec. for, 5
A 292 *Discontinued—Replaced by A 469*
*A 293–77a Steel Forgings, Carbon and Alloy, for Turbine Rotors and Shafts, Spec. for, 5
*A 294–77 Heat-Treated Alloy Steel Forgings for Turbine Wheels and Disks, Spec. for, 5
*A 295–78 High-Carbon Ball and Roller Bearing Steel, Spec. for, 5
*A 296–77 Corrosion-Resistant Iron-Chromium, Iron-Chromium-Nickel, and Nickel-Base Alloy Castings for General Application, Spec. for, 2
*A 297–76 Heat-Resistant Iron Chromium and Iron-Chromium-Nickel Alloy Castings for General Application, Spec. for, 2
A 298 *Discontinued—Available from Americal Welding Society*
*A 299–78 Pressure Vessel Plates, Carbon Steel, Manganese-Silicon, Spec. for, 4
A 300 *Discontinued*
A 301 *Discontinued—Replaced by A 387*
*A 302–78 Pressure Vessel Plates, Alloy Steel, Manganese-Molybdenum and Manganese-Molybdenum-Nickel, Spec. for, 4
A 303 *Discontinued—Replaced by A 570*
*A 304–78 Alloy Steel Bars Subject to End-Quench Hardenability Requirements, Spec. for, 5
A 305 *Discontinued—Replaced by A 615, A 616, A 617*
A 306 *Discontinued—Replaced by A 663, A 675*
*A 307–78 Carbon Steel Externally Threaded Standard Fasteners, Spec. for, 1, 4
*A 308–78 Steel, Sheet, Cold-Rolled, Long Terne Coated, Spec. for, 3
*A 309–54(1975) Weight and Composition of Coating on Long Terne Sheet by the Triple Spot Test, Test for, 3
A 310 *Redesignated A 345*
*A 311–64(1970) Stress Relief Annealed Cold-Drawn Carbon Steel Bars, Spec. for, 5
*A 312–77 Seamless and Welded Austenitic Stainless Steel Pipe, Spec. for, 1
*A 313–76 Chromium-Nickel Stainless and Heat-Resisting Steel Spring Wire, Spec. for, 3, 5
*A 314–76 Stainless and Heat-Resisting Steel Billets and Bars for Forging, Spec. for, 5
A 315 *Discontinued—Replaced by A 335*
A 316 *Discontinued—Available from American Welding Society*
A 317 *Discontinued—Replaced by E 381*
A 318 *Discontinued—Replaced by A 370*
*A 319–71(1975) Gray Iron Castings for Elevated Temperatures for Non-Pressure Containing Parts, Spec. for, 2
*A 320–78 Alloy-Steel Bolting Materials for Low-Temperature Service, Spec. for, 1
*A 321–74 Steel Bars, Carbon, Quenched and Tempered, Spec. for, 5
*A 322–76 Hot-Rolled Alloy Steel Bars, Spec. for, 5
*A 323–76 Ferroboron, Spec. for, 2
*A 324–73 Ferrotitanium, Spec. for, 2
*A 325–78a High-Strength Bolts for Structural Steel Joints, Spec. for, 4
*A 326–67 Zinc-Coated (Galvanized) High Tensile Steel Telephone and Telegraph Line Wire, Spec. for, 3
*A 327–72 Impact Testing of Cast Irons, 2
*A 328–75a Steel Sheet Piling, Spec. for, 4
A 329 *Discontinued—Replaced by A 551*
A 330 *Discontinued—Replaced by A 370*
*A 331–74 Steel Bars, Alloy, Cold-Finished, Spec. for, 5
A 332 *Discontinued—Replaced by A 689*
*A 333–77 Seamless and Welded Steel Pipe for Low-Temperature Service, Spec. for, 1
*A 334–77 Seamless and Welded Carbon and Alloy-Steel Tubes for Low-Temperature Service, Spec. for, 1
*A 335–76 Seamless Ferritic Alloy Steel Pipe for High-Temperature Service, Spec. for, 1
*A 336–78 Alloy Steel Forgings for Seamless Drums, Heads, and Other Pressure Vessel Components, Spec. for, 1, 4, 5
A 337 *Discontinued—Replaced by A 392*
A 338–61(1977) Malleable Iron Flanges, Pipe Fittings, and Valve Parts for Railroad, Marine, and Other Heavy Duty Service at Temperatures up to 650°F (345°C), Spec. for, 2
A 339 *Discontinued—Replaced by A 536*
*A 340–77 Magnetic Testing, Def. of Terms, Symbols, and Conversion Factors Relating to, 44
A 341–69(1974) Direct-Current Magnetic Properties of Materials Using D-C Permeameters and the Ballistic Test Methods, Test for, 44
*A 342–64(1976) Permeability of Feebly Magnetic Materials, Tests for, 44
*A 343–69(1974) Alternating-Current Magnetic Properties of Materials at Power Frequencies Using the Wattmeter-Ammeter-Voltmeter Method and 25-cm Epstein Frame, Test for, 44
A 344 *Discontinued—Replaced by A 712, A 717, A 718, A 719, and A 720*
A 345–75 Flat-Rolled Electrical Steels for Magnetic Applications, Spec. for, 3, 44
*A 346–74 Alternating-Current Magnetic Performance of Laminated Core Specimens Using the Modified Hay Bridge Method, Tests for, 44
*A 347–74 Alternating-Current Magnetic Properties of Materials Using the Modified Hay Bridge Method with 25-cm Epstein Frame, Test for, 44
*A 348–68(1977) Alternating-Current Magnetic Properties of Materials Using the Wattmeter-Ammeter-Voltmeter Method, 100 to 10,000 Hz and 25-cm Epstein Frame, Test for, 44
*A 349–68(1977) Alternating-Current Magnetic Properties of Materials Using the Wattmeter-Ammeter-Voltmeter Method, 50 to 60 Hz and 50-cm Epstein Frame, Test for, 44
*A 350–77a Forgings, Carbon and Low-Alloy Steel, Requiring Notch Toughness Testing for Piping Components, Spec. for, 1
*A 351–78 Austenitic Steel Castings for High-Temperature Service, Spec. for, 1, 2
*A 352–77 Ferritic Steel Castings for Pressure-Containing Parts Suitable for Low-Temperature Service, Spec. for, 1, 2
*A 353–78 Pressure Vessel Plates, Alloy Steel, 9 Percent Nickel, Double-Normalized and Tempered, Spec. for, 4

*A 354–78a Quenched and Tempered Alloy Steel Bolts, Studs, and Other Externally Threaded Fasteners, Spec. for, 1, 4
A 355 *Discontinued*
*A 356–77 Heavy-Walled Carbon and Low-Alloy Steel Castings for Steam Turbines, Spec. for, 2
A 357 *Discontinued—Replaced by A 387*
*A 358–78 Electric-Fusion-Welded Austenitic Chromium-Nickel Alloy Steel Pipe for High-Temperature Service, Spec. for, 1
A 359 *Discontinued—Replaced by A 370*
A 360 *Discontinued*
*A 361–76 Steel Sheet, Zinc-Coated (Galvanized) by the Hot-Dip Process for Roofing and Siding, Spec. for, 3
A 362 *Discontinued*
A 363–72(1976) Zinc-Coated (Galvanized)Steel Overhead Ground Wire Strand, Spec. for, 3
A 364 *Discontinued—Replaced by A 434*
A 365 *Discontinued—Replaced by A 619, A 620*
*A 366–72 Steel, Carbon, Cold-Rolled Sheet, Commercial Quality, Spec. for, 3
*A 367–60(1978) Chill Testing of Cast Iron, 2
*A 368–76 Stainless and Heat-Resisting Steel Wire Strand, Spec. for, 3
*A 369–76 Ferritic Alloy Steel Forged and Bored Pipe for High-Temperature Service, Spec. for, 1
*A 370–77 Mechanical Testing of Steel Products, Methods and Def. for, 1, 2, 3, 4, 5, 10
A 371 *Discontinued—Available from American Welding Society*
*A 372–78 Carbon and Alloy Steel Forgings for Thin-Walled Pressure Vessels, Spec. for, 4, 5
A 373 *Discontinued—Combined with A 36*
A 374 *Discontinued—Replaced by A 606, A 607*
A 375 *Discontinued—Replaced by A 606, A 607*
*A 376–77 Seamless Austenitic Steel Pipe for High-Temperature Central-Station Service, Spec. for, 1
*A 377–77 Gray Iron and Ductile Iron Pressure Pipe, Spec. for, 2
A 378 *Discontinued—Replaced by A 345*
A 379 *Discontinued—Replaced by A 345*
*A 380–78 Cleaning and Descaling Stainless Steel Parts, Equipment, and Systems, Rec. Practice for, 3
*A 381–76 Metal-Arc-Welded Steel Pipe for Use with High-Pressure Transmission Systems, Spec. for, 1
A 382 *Discontinued*
*A 383–77a Axles, Railway, Carbon Steel, Untreated for Export and General Industrial Use, Spec. for, 4, 5
*A 384–76 Safeguarding Against Warpage and Distortion During Hot-Dip Galvanizing of Steel Assemblies, Rec. Practice for, 3
*A 385–76 High-Quality Zinc Coatings (Hot-Dip), Rec. Practice for Providing, 3
*A 386–78 Zinc Coating (Hot-Dip) on Assembled Steel Products, Spec. for, 3
*A 387–78 Pressure Vessel Plates, Alloy Steel, Chromium-Molybdenum, Spec. for, 4
*A 388–78 Ultrasonic Examination of Heavy Steel Forgings, Rec. Practice for, 5
*A 389–77a Alloy Steel Castings Specially Heat-Treated for Pressure-Containing Parts Suitable for High-Temperature Service, Spec. for, 1, 2
*A 390–66(1975) Zinc-Coated (Galvanized) Steel Poultry Netting (Hexagonal and Straight Line) and Woven Steel Poultry Fencing, Spec. for, 3
*A 391–65(1975) Alloy Steel Chain, Spec. for, 5
*A 392–74 Zinc-Coated Steel Chain-Link Fence Fabric, Spec. for, 3
A 393 *Discontinued—Replaced by A 262*
*A 394–78 Galvanized Steel Transmission Tower Bolts, Spec. for, 4
*A 395–77 Ferritic Ductile Iron Pressure-Retaining Castings for Use at Elevated Temperatures, Spec. for, 2
A 396 *Discontinued—Replaced by A 536*
A 397 *Discontinued*
A 398 *Discontinued—Available from American Welding Society*
A 399 *Discontinued—Available from American Welding Society*
*A 400–69(1977) Selection of Steel Bar Compositions According to Section, Rec. Practice for, 5
*A 401–77 Chromium-Silicon Alloy Steel Spring Wire, Spec. for, 3, 5
A 402 *Discontinued*
*A 403–78 Wrought Austenitic Stainless Steel Piping Fittings, Spec. for, 1
A 404 *Discontinued*
*A 405–70(1976) Seamless Ferritic Alloy-Steel Pipe Specially Heat Treated for High-Temperature Service, Spec. for, 1
A 406 *Discontinued*
*A 407–77 Steel Wire, Hard-Drawn, for Coiled-Type Springs, Spec. for, 3, 5
A 408 *Discontinued—Replaced by A 615*
*A 409–77 Welded Large Outside Diameter Light-Wall Austenitic Chromium-Nickel Alloy Steel Pipe for Corrosive or High-Temperature Service, Spec. for, 1
A 410 *Discontinued*
*A 411–65(1976) Zinc-Coated (Galvanized) Low-Carbon Steel Armor Wire, Spec. for, 3
*A 412–75 Stainless and Heat-Resisting Chromium-Nickel-Manganese Steel Plate, Sheet, and Strip, Spec. for, 3
*A 413–72 Carbon Steel Chain, Spec. for, 5
*A 414–71 Carbon Steel Sheets for Pressure Vessels, Spec. for, 3, 4
A 415 *Discontinued—Replaced by A 569*
*A 416–74 Uncoated Seven-Wire Stress-Relieved Strand for Prestressed Concrete, Spec. for, 4
*A 417–74 Steel Wire, Hard-Drawn, for Zig-Zag, Square-Formed, and Sinous-Type Upholstery Spring Units, Spec. for, 3, 5
*A 418–77 Ultrasonic Inspection of Turbine and Generator Steel Rotor Forgings, 5
A 419 *Discontinued*
*A 420–78 Piping Fittings of Wrought Carbon Steel and Alloy Steel for Low-Temperature Service, Spec. for, 1
*A 421–78 Uncoated Stress-Relieved Wire for Prestressed Concrete, Spec. for, 4
*A 422–64(1973) Butt Welds in Still Tubes for Refinery Service, Spec. for, 1
*A 423–75 Seamless and Electric Welded Low-Alloy Steel Tubes, Spec. for, 1
*A 424–73 Steel Sheet for Procelain Enameling, Spec. for, 3
A 425 *Discontinued—Replaced by A 569*
*A 426–76 Centrifugally Cast Ferritic Alloy Steel Pipe for High-Temperature Service, Spec. for, 1
*A 427–74 Wrought Alloy Steel Rolls for Cold and Hot Reduction, Spec. for, 5
A 428–68(1978) Weight of Coating on Aluminum-Coated Iron or Steel Articles, Test for, 3
A 429 *Discontinued—Replaced by A 276*
*A 430–77 Austenitic Steel Forged and Bored Pipe for High-Temperature Service, Spec. for, 1
A 431 *Discontinued—Replaced by A 615*
A 432 *Discontinued—Replaced by A 615*
A 433 *Discontinued*
*A 434–76 Steel Bars, Alloy, Hot-Rolled or Cold-Finished, Quenched and Tempered, Spec. for, 5
*A 435–75 Straight-Beam Ultrasonic Examination of Steel Plates for Pressure Vessels, Spec. for, 4
A 436–78 Austenitic Gray Iron Castings, Spec. for, 2
*A 437–77 Alloy-Steel Turbine-Type Bolding Material Specially Heat Treated for High-Temperature Service, Spec. for, 1
A 438–62(1974) Transverse Testing of Gray Cast Iron, 2
*A 439–77 Austenitic Ductile Iron Castings, Spec. for, 2
*A 441–77 High-Strength Low-Alloy Structural Manganese Vanadium Steel, Spec. for, 4
*A 442–78 Pressure Vessel Plates, Carbon Steel, Improved Transition Properties, Spec. for, 4
A 443 *Discontinued—Combined with A 370*
*A 444–78 Steel Sheet, Zinc-Coated (Galvanized) by the Hot-Dip Process for Culverts and Underdrains, Spec. for, 3
A 445 *Discontinued—Replaced by A 395*
*A 446–76 Steel Sheet, Zinc-Coated (Galvanized) by the Hot-Dip Process, Structural (Physical) Quality, Spec. for, 3
*A 447–74 Chromium-Nickel-Iron Alloy Castings (25-12 Class) for High-Temperature Service, Spec. for, 2
A 448 *Discontinued*
*A 449–78a Quenched and Tempered Steel Bolts and Studs, Spec. for, 4
*A 450–78 Carbon, Ferritic Alloy, and Austenitic Alloy Steel Tubes, Spec. for General Requirements for, 1
*A 451–78 Centrifugally Cast Austenitic Steel Pipe for High-Temperature Service, Spec. for, 1
*A 452–75 Centrifugally Cast Austenitic Steel Cold-Wrought Pipe for High-Temperature Service, Spec. for, 1
*A 453–78 Bolting Materials, High-Temperature, 50 to 120 ksi Yield Strength, with Expansion Coefficients Comparable to Austenitic Steels, Spec. for, 1
*A 454–72 Steel Conveyor Chain, Spec. for, 5
*A 455–78 Pressure Vessel Plates, Carbon Steel, High Strength Manganese, Spec. for, 1, 4
*A 456–71(1976) Magnetic Particle Inspection of Large Crankshaft Forgings, Spec. for, 5
*A 457–71(1979) Hot-Worked, Hot-Cold-Worked, and Cold-Worked Alloy Steel Plate, Sheet, and Strip for High Strength at Elevated Temperatures, Spec. for, 3
*A 458–79 Hot-Worked, Hot-Cold-Worked, and Cold-Worked

Alloy Steel Bars for High Strength at Elevated Temperatures, Spec. for, 5

*A 459–71(1975) Zinc-Coated Flat Steel Armoring Tape, Spec. for, 3

*A 460–68(1976) Copper-Clad Steel Wire Strand, Spec. for, 3

A 461 Discontinued—Replaced by A 564, A 637, A 638, A 639

A 462 Discontinued—Replaced by E 165

*A 463–77 Steel Sheet, Cold-Rolled, Aluminum-Coated Type 1, Spec. for, 3

A 464 Discontinued—Replaced by E 376

A 465 Discontinued

*A 466–73 Weldless Carbon Steel Chain, Spec. for, 5

*A 467–72 Machine and Coil Chain, Spec. for, 5

A 468 Discontinued—Replaced by A 6 and A 341

*A 469–77 Vacuum-Treated Steel Forgings for Generator Rotors, Spec. for, 5

*A 470–78 Vacuum-Treated Carbon and Alloy Steel Forgings for Turbine Rotors and Shafts, Spec. for, 5

*A 471–77 Vacuum-Treated Alloy Steel Forgings for Turbine Rotor Disks and Wheels, Spec. for, 5

*A 472–74 Heat Stability of Steam Turbine Shafts and Rotor Forgings, Test for, 5

*A 473–76 Stainless and Heat-Resisting Steel Forgings, Spec. for, 5

A 474–68(1976) Aluminum-Coated Steel Wire Strand, Spec. for, 3

*A 475–78 Zinc-Coated Steel Wire Strand, Spec. for, 3

*A 476–70(1976) Ductile Iron Castings for Paper Mill Dryer Rolls, Spec. for, 2

*A 477–79 Hot-Worked, Hot-Cold-Worked and Cold-Worked Alloy Steel Forgings and Forging Billets for High Strength at Elevated Temperatures, Spec. for, 5

*A 478–76 Chromium-Nickel Stainless and Heat-Resisting Steel Weaving Wire, Spec. for, 3

*A 479–78 Stainless and Heat-Resisting Steel Bars and Shapes for Use in Boilers and Other Pressure Vessels, Spec. for, 4, 5

*A 480–75 Flat-Rolled Stainless and Heat-Resisting Steel Plate, Sheet, and Strip, Spec. for General Requirements for, 3

*A 481–73 Chromium Metal, Spec. for, 2

*A 482–76 Ferrochrome-Silicon, Spec. for, 2

*A 483–64(1974) Silicomanganese, Spec. for, 2

*A 484–76 Stainless and Heat-Resisting Wrought Steel Products (Except Wire), Spec. for General Requirements for, 5

*A 485–75 High Hardenability Bearing Steels, Spec. for, 5

*A 486–74 Steel Castings for Highway Bridges, Spec. for, 2

*A 487–78 Steel Castings Suitable for Pressure Service, Spec. for, 1, 2

*A 488–77a Qualification of Procedures and Personnel for the Welding of Steel Castings, Rec. Practice for, 2

*A 489–72 Carbon Steel Eyebolts, Spec. for, 4

*A 490–78 Quenched and Tempered Alloy Steel Bolts for Structural Steel Joints, Spec. for, 4

*A 491–74 Aluminum-Coated Steel Chain-Link Fence Fabric, Spec. for, 3

*A 492–76 Stainless and Heat-Resisting Steel Rope Wire, Spec. for, 3

*A 493–76 Stainless and Heat-Resisting Steel for Cold Heading and Cold Forging—Bar and Wire, Spec. for, 3

*A 494–76 Nickel and Nickel Alloy Castings, Spec. for, 2, 8

*A 495–76 Calcium-Silicon and Calcium-Maganese-Silicon, Spec. for, 2

*A 496–72 Deformed Steel Wire for Concrete Reinforcement, Spec. for, 4

*A 497–72 Welded Deformed Steel Wire Fabric for Concrete Reinforcement, Spec. for, 4

*A 498–68(1973) Seamless and Welded Carbon, Ferritic, and Austenitic Alloy Steel Heat-Exchanger Tubes with Integral Fins, Spec. for, 1

*A 499–76 Hot-Rolled Rail Carbon Steel Bars and Shapes, Spec. for, 5

*A 500–78 Cold-Formed Welded and Seamless Carbon Steel Structural Tubing in Rounds and Shapes, Spec. for, 1, 4

*A 501–76 Hot-Formed Welded and Seamless Carbon Steel Structural Tubing, Spec. for, 1, 4

*A 502–76 Steel Structural Rivits, Spec. for, 4

*A 503–75 Ultrasonic Examination of Large Forged Crankshafts, Spec. for, 5

*A 504–77 Wrought Carbon Steel Wheels, Spec. for, 4

*A 505–78 Steel Sheet and Strip, Alloy, Hot-Rolled and Cold-Rolled, Spec. for General Requirements for, 3

*A 506–73 Steel Sheet and Strip, Alloy, Hot-Rolled and Cold-Rolled, Regular Quality, Spec. for, 3

*A 507–73 Steel Sheet and Strip, Alloy, Hot-Rolled and Cold-Rolled, Drawing Quality, Spec. for, 3

*A 508–78a Quenched and Tempered Vacuum-Treated Carbon and Alloy Steel Forgings for Pressure Vessels, Spec. for, 4, 5

*A 509–68(1974) Steel Forging, Def. of, 5

*A 510–77 Wire Rods and Coarse Round Wire, Carbon Steel, Spec. for General Requirements for, 3

*A 510M–77 Wire Rods and Coarse Round Wire, Carbon Steel, [Metric] Spec. for General Requirements for, 3

*A 511–77b Seamless Stainless Steel Mechanical Tubing, Spec. for, 1

*A 512–77a Cold-Drawn Buttweld Carbon Steel Mechanical Tubing, Spec. for, 1

*A 513–78 Electric-Resistance-Welded Carbon and Alloy Steel Mechanical Tubing, Spec. for, 1

*A 514–77 High-Yield Strength, Quenched and Tempered Alloy Steel Plate, Suitable for Welding, Spec. for, 4

*A 515–78 Pressure Vessel Plates, Carbon Steel, for Intermediate- and Higher-Temperature Service, Spec. for, 4

*A 516–78 Pressure Vessel Plates, Carbon Steel, for Moderate- and Lower-Temperature Service, Spec. for, 4

*A 517–78 Pressure Vessel Plates, Alloy Steel, High-Strength, Quenched and Tempered, Spec. for, 4

*A 518–64(1974) Corrosion-Resistant High-Silicon Cast Iron, Spec. for, 2

*A 519–77b Seamless Carbon and Alloy Steel Mechanical Tubing, Spec. for, 1

*A 520–72 Seamless and Electric-Resistance-Welded Carbon Steel Tubular Products for High-Temperature Service Conforming to ISO Recommendations for Boiler Construction, Spec. for Supplementary Requirements for, 1

*A 521–77 Steel, Closed-Impression Die Forgings for General Industrial Use. Spec. for, 5

*A 522–76 Forged or Rolled 8 and 9% Nickel Alloy Steel Flanges, Fittings, Valves, and Parts for Low-Temperature Service, Spec. for, 1

*A 523–78 Plain End Seamless and Electric-Resistance-Welded Steel Pipe for High-Pressure Pipe-Type Cable Circuits, Spec. for, 1

*A 524–78 Seamless Carbon Steel Pipe for Atmospheric and Lower Temperatures, Spec. for, 1

*A 525–78a Steel Sheet, Zinc-Coated (Galvanized) by the Hot-Dip Process, General Requirements, Spec. for, 3

*A 526–71(1975) Steel Sheet, Zinc-Coated (Galvanized) by the Hot-Dip Process, Commercial Quality, Spec. for, 3

*A 527–71(1975) Steel Sheet, Zinc-Coated (Galvanized) by the Hot-Dip Process, Lock-Forming Quality, Spec. for, 3

*A 528–71(1975) Steel Sheet, Zinc-Coated (Galvanized) by the Hot-Dip Process, Drawing Quality, Spec. for, 3

*A 529–75 Structural Steel with 42,000 psi (290 MPa) Minimum Yield Point (½ in. (12.7mm) Maximum Thickness), Spec. for, 4

*A 530–78 Specialized Carbon and Alloy Steel Pipe, Spec. for General Requirements for, 1

*A 531–74 Ultrasonic Inspection of Turbine-Generator Steel Retaining Rings, Rec. Practice for, 5

A 532–75a Abrasion-Resistant Cast Irons, Spec. for, 2

*A 533–78 Pressure Vessel Plates, Alloy Steel, Quenched and Tempered, Manganese-Molybdenum and Manganese-Molybdenum-Nickel, Spec. for, 4

*A 534–76 Carburizing Steels for Anti-Friction Bearings, Spec. for, 5

*A 535–65(1977) Special-Quality Ball and Roller Bearing Steel, Spec. for, 5

*A 536–77 Ductile Iron Castings, Spec. for, 2

*A 537–78 Pressure Vessel Plates, Heat-Treated, Carbon-Manganese-Silicon Steel, Spec. for, 4

*A 538–77 Pressure Vessel Plates, Alloy Steel, Precipitation Hardening (Maraging), 18 Percent Nickel, Spec. for, 4

*A 539–73 Electric-Resistance-Welded Coiled Steel Tubing for Gas and Fuel Oil Lines, Spec. for, 1

*A 540–77a Alloy-Steel Bolting Materials for Special Applications, Spec. for, 1, 45

*A 541–78 Steel Forgings, Carbon and Alloy, Quenched and Tempered, for Pressure Vessel Components, Spec. for, 4, 5

*A 542–78 Pressure Vessel Plates, Alloy Steel, Quenched and Tempered Chromium-Molybdenum, Spec. for, 4

*A 543–78 Pressure Vessel Plates, Alloy Steel, Quenched and Tempered Nickel-Chromium-Molybdenum, Spec. for, 4

*A 544–77 Steel Wire, Carbon, Scrapless Nut Quality, Spec. for, 3

*A 545–77 Steel Wire, Carbon, Cold-Heading Quality, for Machine Screws, Spec. for, 3

*A 546–77 Steel Wire, Medium-High-Carbon, Cold-Heading Quality, for Hexagon-Head Bolts, Spec. for, 3

*A 547–77 Steel Wire, Alloy, Cold-Heading Quality, for Hexagon-Head Bolts, Spec. for, 3

*A 548–77 Steel Wire, Carbon, Cold-Heading Quality, for Tapping or Sheet Metal Screws, Spec. for, 3

*A 549–77 Steel Wire, Carbon, Cold-Heading Quality, for Wood Screws, Spec. for, 3

*A 550–78 Ferrocolumbium, Spec. for, 2

*A 551–65(1976) Steel Tires, Spec. for, 4

A 552 Discontinued—Replaced by A 689

*A 553–78 Pressure Vessel Plates, Alloy Steel, Quenched and Tempered 8 and 9 Percent Nickel, Spec. for, 4

*A 554–77 Welded Stainless Steel Mechanical Tubing, Spec. for, 1

*A 555–78 Stainless and Heat-Resisting Steel Wire, Spec. for General Requirements for, 3

*A 556–76 Seamless Cold-Drawn Carbon Steel Feedwater Heater Tubes, Spec. for, 1

*A 557–76 Electric-Resistance-Welded Carbon Steel Feedwater Heater Tubes, Spec. for, 1

A 558 Discontinued—Available from American Welding Society

A 559 Discontinued—Available from American Welding Society

*A 560–74 Chromium-Nickel Alloy Castings, Spec. for, 2

*A 561–71(1978) Macroetch Testing of Tool Steel Bars, Rec. Practice for, 5

*A 562–78 Pressure Vessel Plates, Carbon Steel, Manganese-Titanium for Glass or Diffused Metallic Coatings, Spec. for, 4

*A 563–78a Carbon and Alloy Steel Nuts, Spec. for, 1, 4

*A 564–74 Hot-Rolled and Cold-Finished Age-Hardening Stainless and Heat-Resisting Steel Bars and Shapes, Spec. for, 5

*A 565–74 Martensitic Stainless Steel Bars, Forgings, and Forging Stock for High-Temperature Service, Spec. for, 5

*A 566–68(1977) Alternating-Current Magnetic Properties of Materials Using Alternating Current Potentiometer and 25-cm Epstein Frame, Test for, 44

*A 567–74 Iron, Cobalt, and Nickel-Base Alloy Castings for High Strength at Elevated Temperatures, Spec. for, 2

*A 568–74 Steel, Carbon and High-Strength Low-Alloy Hot-Rolled Sheet, Hot-Rolled Strip, and Cold-Rolled Sheet, General Requirements, Spec. for, 3

A 568M–77 Steel, Carbon and High-Strength Low-Alloy Hot-Rolled Sheet and Cold-Rolled Sheet, [Metric] Spec. for General Requirements for, 3

*A 569–72 Steel, Carbon (0.15 Maximum, Percent), Hot-Rolled Sheet and Strip, Commercial Quality, Spec. for, 3

*A 570–78 Hot-Rolled Carbon Steel Sheet and Strip, Structural Quality, Spec. for, 3, 4

*A 571–71(1976) Austenitic Ductile Iron Castings for Pressure-Containing Parts Suitable for Low-Temperature Service, Spec. for, 2

*A 572–78 High-Strength Low-Alloy Columbium-Vanadium Steels of Structural Quality, Spec. for, 4

*A 573–77 Structural Carbon Steel Plates of Improved Toughness, Spec. for, 4

*A 574–77 Alloy Steel Socket-Head Cap Screws, Spec. for, 4

*A 575–73 Merchant Quality Hot-Rolled Carbon Steel Bars, Spec. for, 5

*A 576–74 Steel Bars, Carbon, Hot-Rolled, Special Quality, Spec. for, 5

*A 577–77 Ultrasonic Angle-Beam Examination of Steel Plates, Spec. for, 4

*A 578–77c Straight-Beam Ultrasonic Examination of Plain and Clad Steel Plates for Special Applications, Spec. for, 4

*A 579–77 Superstrength Alloy Steel Forgings, Spec. for, 5

*A 580–77 Stainless and Heat-Resisting Steel Wire, Spec. for, 3

*A 581–78 Free-Machining Stainless and Heat-Resisting Steel Wire, Spec. for, 3

*A 582–78 Free-Machining Stainless and Heat-Resisting Steel Bars, Hot-Rolled or Cold-Finished, Spec. for, 5

*A 583–77 Cast Steel Wheels for Railway Service, Spec. for, 4

*A 584–68(1976) Aluminum-Coated Steel Farm-Field and Right-of-Way Fencing, Spec. for, 3

*A 585–71(1975) Aluminum-Coated Steel Barbed Wire, Spec. for, 3

*A 586–68(1976) Zinc-Coated Steel Structural Strand, Spec. for, 3

*A 587–78 Electric-Welded Low-Carbon Steel Pipe for the Chemical Industry, Spec. for, 1

*A 588–77a High-Strength Low-Alloy Structural Steel with 50,000 psi Minimum Yield Point to 4 in. Thick, Spec. for, 4

*A 589–78 Seamless and Welded Carbon Steel Water Well Pipe, Spec. for, 1

*A 590–72a(1977) Pressure Vessel Plates, Alloy Steel, Precipitation Hardening (Maraging), 12 Percent Nickel, Spec. for, 4

*A 591–77 Steel Sheet, Cold-Rolled, Electrolytic Zinc-Coated, Spec. for, 3

*A 592–74 High-Strength Quenched and Tempered Low-Alloy Steel Forged Fittings and Parts for Pressure Vessels, Spec. for, 4, 5

A 593 Discontinued

*A 594–69(1975) Carbon Steel Forgings with Special Magnetic Characteristics, Spec. for, 5

*A 595–74 Steel Tubes, Low-Carbon, Tapered for Structural Use, Spec. for, 1, 4

*A 596–69(1974) Direct-Current Magnetic Properties of Materials Using Ring Test Procedures and the Ballistic Methods, Test for, 44

*A 597–75 Cast Tool Steel, Spec. for, 2

*A 598–69(1974) Magnetic Properties of Magnetic Amplifier Cores, Test for, 44

*A 599–77 Steel Sheet, Cold-Rolled, Tin-Coated by Electrodeposition, Spec. for, 3

*A 600–76 High-Speed Tool Steel, Spec. for, 5

*A 601–69(1974) Electrolytic Manganese Metal, Spec. for, 2

*A 602–70(1976) Automotive Malleable Iron Castings, Spec. for, 2

*A 603–70(1974) Zinc-Coated Steel Structural Wire Rope, Spec. for, 3

*A 604–77 Macroetch Testing of Consumable Electrode Remelted Steel Bars and Billets, 3, 5

*A 605–72(1977) Pressure Vessel Plates, Alloy Steel, Quenched and Tempered Nickel-Cobalt-Molybdenum-Chromium, Spec. for, 4

*A 606–75 Steel Sheet and Strip, Hot-Rolled and Cold-Rolled, High Strength, Low-Alloy, with Improved Corrosion Resistance, Spec. for, 3

*A 607–75 Steel Sheet and Strip, Hot-Rolled and Cold-Rolled, High-Strength, Low-Alloy Columbium and/or Vanadium, Spec. for, 3

*A 608–70(1976) Centrifugally Cast Iron-Chromium-Nickel High-Alloy Tubing for Pressure Application at High Temperatures, Spec. for, 1, 2

*A 609–78 Longitudinal-Beam Ultrasonic Inspection for Carbon and Low-Alloy Steel Castings, Spec. for, 2

*A 610–70(1974) Ferroalloys for Determination of Size, Sampling and Testing, 2

*A 611–72 Steel, Cold-Rolled Sheet, Carbon, Structural, Spec. for, 3, 4

*A 612–78 Pressure Vessel Plates, Carbon Steel, High Strength, for Moderate and Lower Temperature Service, Spec. for, 4

*A 613–76 Steel Castings for Nuclear and Other Special Applications, Spec. for Special Requirements for, 1, 2, 45

*A 614–76 Bolding Material for Nuclear and Other Special Applications, Spec. for Special Requirements for, 1, 45

*A 615–78 Deformed and Plain Billet-Steel Bars for Concrete Reinforcement, Spec. for, 4

*A 616–76 Rail-Steel Deformed and Plain Bars for Concrete Reinforcement, Spec. for, 4

*A 617–76 Axle-Steel Deformed and Plain Bars for Concrete Reinforcement, Spec. for, 4

*A 618–74 Hot-Formed Welded and Seamless High-Strength Low-Alloy Structural Tubing, Spec. for, 1, 4

A 619–75 Steel Sheet, Carbon, Cold-Rolled, Drawing Quality, Spec. for, 3

A 620–75 Steel Sheet, Carbon, Cold-Rolled, Drawing Quality, Special Killed, Spec. for, 3

A 621–75 Steel Sheet and Strip, Carbon, Hot-Rolled, Drawing Quality, Spec. for, 3

A 622–75 Steel Sheet and Strip, Carbon, Hot-Rolled, Drawing Quality, Special Killed, Spec. for, 3

*A 623–78 Tin Mill Products, Spec. for General Requirements for, 3

*A 623M–78 Tin Mill Products [Metric], Spec. for General Requirements for, 3

*A 624–78 Single-Reduced Electrolytic Tin Plate, Spec. for, 3

*A 625–76 Single-Reduced Black Plate, Spec. for, 3

*A 626–78 Double-Reduced Electrolytic Tin Plate, Spec. for, 3

*A 627–68(1973) Homogeneous Tool-Resisting Steel Bars for Security Applications, Spec. for, 5

*A 628–74 Tool-Resisting Composite Steel Plates for Security Applications, Spec. for, 3

*A 629–77 Tool-Resisting Steel Flat Bars and Shapes for Security Applications, Spec. for, 5

*A 630–68(1974) Tin Coating Weights for Hot-Dip and Electrolytic Tin Plate, Determination of, 3

*A 631–74 Cast Steel Wheels for Electrical Railway Service, Spec. for, 4

F 328 Not yet assigned
F 329-78 Particulate Contamination in Liquids Using an In-Line Automatic Monitor, Sampling and Measurement of, Rec. Practice for, **25**
F 330-79 Bird Impact Testing of Aerospace Transparent Enclosures, **25**
F 331-72(1977) Nonvolatile Residue of Halogenated Solvent Extract from Aerospace Components (Using Rotary Flash Evaporator), Test for, **25**
F 332-75 Nonvolatile Residue (NVR) in Trichlorotrifluoroethane (Meseran Procedure), Test for Amount of, **25**
F 333-75 Lubricant on the Surface of Aluminum Foils (Meseran Procedure), Test for Amount of, **25**
***F 334-75** Lithium-Ion Drift Mobility in Germanium Single Crystals, Measuring, **43**
***F 335-78** Electrostatic Copying, Def. of Terms Relating to, **20**
***F 336-76** Design and Construction of Nonmetallic Enveloped Gaskets for Corrosive Service, Rec. Practice for, **38**
F 337-71(1979) Dimensions and Tolerances for Bone Plates, Rec. Practice on, **46**
***F 338-77** Tibial-Type Bone Plate, Spec. for, **46**
F 339-71 Cloverleaf Intramedullary Pins, Spec. for, **46**
***F 340-71**(1977) Pilot-Type Medical Countersinks, Spec. for, **46**
F 341-71(1979) Slotted Bone Plates, Spec. for, **46**
***F 342-71**(1977) Counterlocking Screws (Thornton Type), Spec. for, **46**
***F 343-71**(1977) Counterlocking Screws (McLaughlin Type), Spec. for, **46**
***F 344-71**(1977) Counterbored Hex-Head Bolts (Thornton Type) Made from Stainless Steel, Spec. for, **46**
***F 345-71**(1977) Counterbored Hex-Head Bolts (McLaughlin Type) Made from Stainless Steel, Spec. for, **46**
***F 346-71**(1977) Cannulated Hex-Head Bolts (Thornton Type) Made from Cobalt-Chromium Alloy, Spec. for, **46**
***F 347-71**(1977) Cannulated Hex-Head Bolts (McLaughlin Type) Made from Cobalt-Chromium Alloy, Spec. for, **46**
***F 348-71**(1977) Hex-Head Bolts (Thornton Type) Made from Cobalt-Chromium Alloy, Spec. for, **46**
***F 349-71**(1977) Hex-Head Bolts (McLaughlin Type) Made from Cobalt-Chromium Alloy, Spec. for, **46**
***F 350-71**(1977) Hex-Head Bolts (Thornton Type) and Lock Washers Made from Stainless Steel, Spec. for, **46**
***F 351-71**(1977) Hex-Head Bolts (McLaughlin Type) and Lock Washers Made from Stainless Steel, Spec. for, **46**
***F 352-71**(1977) Lock Washers Made from Stainless Steel, Spec. for, **46**
***F 353-71**(1977) Tri-Fin Nails Made from Cobalt-Chromium Alloy, Spec. for, **46**
***F 354-71**(1977) Tri-Fin Nails Made from Stainless Steel, Spec. for, **46**
F 355-78 Shock Absorbing Properties of Playing Surface Systems and Materials, Test for, **46**
***F 356-75** Beryllia Ceramics for Electronic and Electrical Applications, Spec. for, **43**
***F 357-78** Solderability of Thick—Film Conductors, Practice for Determining, **43**
***F 358-73**(1978) Wavelength of Peak Photoluminescence and the Corresponding Composition of Gallium Arsenide Phosphide Wafers, Test for, **43**
***F 359-72**(1977) Static Immersion Testing of Unstressed Materials in Nitrogen Tetraoxide (N_2O_4), **25**
***F 360-72**(1978) Image Evaluation of Electrostatic Business Copies, Rec. Practice for, **20**
F 361-72 Biological Compatibility of Metals for Surgical Implants, Rec. Practice for Experimental Testing for, **46**
F 362-72 Erasability of Inked Ribbons, Test for, **20**
F 363-73 Corrosion Testing of Enveloped Gaskets, **38**
***F 364-77** Molybdenum Flattened Wire for Electron Tubes, Spec. for, **43**
F 365 Discontinued
F 366-73 Fixation Pins and Wires, Spec. for, **46**
F 367-73 Screw Holes and Screw Slots in Bone Plates, Rec. Practice for Dimensions and Tolerances for, **46**
F 368-73 Fixation Pins—Knowles and Hagie Types, Spec. for, **46**
F 369-73 Hip Nail—Jewett Type, Spec. for, **46**
F 370-73 Proximal Femoral Prosthesis, Spec. for, **46**
F 371-73 Compatibility of Materials with Liquid Oxygen (Reaction Intensity Method), Test for, **25**
***F 372-73**(1978) Water Vapor Transmission of Flexible Barrier Materials Using an Infrared Detection Technique, Test for, **21**
F 373-73 Embossed Depth of Resilient Floor Coverings, Test for, **46**
***F 374-79** Sheet Resistance of Silicon Epitaxial Layers Using a Collinear Four-Probe Array, Test for, **43**
***F 375-77** Integrated Circuit Lead Frame Material, Spec. for, **43**
F 376-79 Tires for Wet Traction in Cornering (Without Torque Application), Using Highway Vehicles, Testing, **38**
F 377-74 Braking Force for Testing of Pneumatic Tires, Calibration of, **38**
F 378 Discontinued
***F 379-76** Slope Efficiency and Lasing Threshold of Ruby Laser Rods, Rec. Practice for Measuring, **43**
***F 380-77** Effective Fluorescent Lifetime of Neodymium-Doped Laser Materials, Test for, **43**
F 381-77 Components, Assembly, and Use of a Trampoline, Consumer Safety Spec. for, **46**
F 382-73 Static Bend Testing of Bone Plates, Rec. Practice for, **46**
F 383-73 Static Bend and Torsion Testing of Intramedullary Rods, Rec. Practice for, **46**
F 384-73 Static Bend Testing of Nail Plates, Rec. Practice for, **46**
F 385 Not yet assigned
F 386-73 Thickness of Resilient Flooring Materials Having Flat Surfaces, Test for, **46**
F 387-73 Caliper of Resilient Floor Covering with Foam Layer, Rec. Practice for Measuring, **46**
***F 388-77** Oxide Thickness on Silicon Wafers and Metallization Thickness by Multiple-Beam Interference (Tolanksy Method), Measurement of, **43**
***F 389-76** Crystallographic Perfection of Germanium by Preferential Etch Techniques, Test for, **43**
***F 390-78** Sheet Resistance of Thin Metallic Films with a Collinear Four-Probe Array, Test for, **43**
***F 391-78** Minority-Carrier Diffusion Length in Silicon by Measurement of Steady-State Surface Photovoltage, Test for, **43**
F 392-74 Flex Durability of Flexible Barrier Materials, Test for, **21**
F 393-74 Inspection of Pneumatic Tires Prior to Retreading, Rec. Practice for, **38**
***F 394-78** Biaxial Flexure Strength (Modulus of Rupture) of Ceramic Substrates, Test for, **43**
F 395-77 Vacuum Cleaners, Def. of Terms Relating to, **46**
F 396-74 One-Time Typewriter Ribbons, Rec. Practice for Comparing, **20**
***F 397-77** Resistivity of Silicon Bars Using a Two-Point Probe, Test for, **43**
***F 398-77** Majority Carrier Concentration in Semiconductors by Measurement of Wavelength of the Plasma Resonance Minimum, Test for, **43**
***F 399-77** Thickness of Heteroepitaxial or Polysilicon Layers, Test for, **43**
***F 400-79** Lighters, Consumer Safety Spec. for, **46**
F 401-74 Yield and Maintenance Factors for Gaskets, Test for, **38**
F 402-74 Safe Handling of Solvent Cements Used for Joining Thermoplastic Pipe and Fittings, Rec. Practice for, **34**
F 403-74 Tires for Wet Traction in Straight-Ahead Braking, Using Highway Vehicles, Testing, **38**
F 404-75 High Chairs, Consumer Safety Spec. for, **46**
***F 405-77a** Corrugated Polyethylene (PE) Tubing and Fittings, Spec. for, **34**
F 406-77 Playpens, Consumer Safety Spec. for, **46**
F 407 Not yet assigned
F 408-75 Tires for Wet Traction in Straight-Ahead Braking, Using a Towed Trailer, Testing, **38**
***F 409-77** Thermoplastic Accessible and Replaceable Plastic Tube and Tubular Fittings, Spec. for, **34**
F 410-75 Wear Layer Thickness of Resilient Floor Coverings by Optical Measurement, Test for, **46**
F 411-75 Life Evaluation of Air-Handling System of Household Canister Vacuum Cleaners, **46**
***F 412-78** Plastic Piping Systems, Def. of Terms Relating to, **34**
***F 413-77** Preparation of the Offset Duplicator for Use in Functional Testing of Lithographic Copy Products, Rec. Practice for, **20**
F 414-75 Energy Absorbed by and Deformation Characteristics of a Tire When Deformed by a Slow-Moving Plunger, Test for, **38**
F 415-75 Curl in Carbon Paper, Test for, **20**
***F 416-77** Swirls and Striations in Chemically Polished Silicon Wafers, Test for Detection of, **43**
***F 417-78** Flexural Strength (Modulus of Rupture) of Electronic-Grade Ceramics, Test for, **43**
***F 418-77** Constant Composition Region of Epitaxial Gallium Arsenide Phosphide for Hall Effect Measurements, Rec. Practice for Preparation of Samples of the, **43**
F 419-77T Net Carrier Density in Silicon Epitaxial Layers by Diode Voltage-Capacitance of Gated and Ungated Diodes, Test for, **43**
F 420-75 Access Depth Under Furniture of Vacuum Cleaners, Test for, **46**
F 421-75 Rib and Lug Height or Groove and Void Depth in Passenger Car Tires, Test for, **38**
F 422 Not yet assigned
F 423-75 Polytetrafluoroethylene (PTFE) Plastic-Lined Ferrous Metal Pipe and Fittings, Spec. for, **34**
F 424-75 Tires for Wet Driving Traction in Straight-Ahead Motion Using Highway Vehicles, Testing, **38**
***F 425-77** Lithographic Copy Products, Def. of Terms Relating to, **20**
***F 426-75** Fat in Meat and Meat Products, Rec. Practice for Evaluating and Classifying Methods for the Analysis of, **46**
***F 427-77** Sampling Meat to Determine Percent Composition in a Lot, Rec. Practice for, **46**
***F 428-77** Intensity of Scratches on Aerospace Glass Enclosures, Test for, **25**
***F 429-75** Shock-Attenuation Characteristics of Protective Headgear for Football, Test for, **46**
F 430-75 Paper Used for Vacuum Cleaner Filter Bags, Testing, **46**
F 431-75 Air Performance Measurement Plenum Chamber for Vacuum Cleaners, Spec. for, **46**
***F 432-78** Roof and Rock Bolts and Accessories, Spec. for, **4**
***F 433-77** Thermal Conductivity of Gasket Materials, Rec. Practice for Evaluating, **38**
***F 434-75** Blow-out Testing of Enveloped Gaskets, **38**
***F 435-75** Peak Wet Traction of Tires in Cornering with Driving Torque Application, Using Highway Vehicles, Test for, **38**
***F 436-78** Hardened Steel Washers, Spec. for, **4**
***F 437-77** Threaded Chlorinated Poly(Vinyl Chloride) (CPVC) Plastic Pipe Fittings, Schedule 80, Spec. for, **34**
***F 438-77** Socket-Type Chlorinated Poly(Vinyl Chloride) (CPVC) Plastic Pipe Fittings, Schedule 40, Spec. for, **34**
***F 439-77** Socket-Type Chlorinated Poly(Vinyl Chloride) (CPVC) Plastic Pipe Fittings, Schedule 80, Spec. for, **34**
***F 441-77** Chlorinated Poly(Vinyl Chloride) (CPVC) Plastic Pipe, Schedules and 40 and 80, Spec. for, **34**
***F 442-77** Chlorinated Poly(Vinyl Chloride) (CPVC) Plastic Pipe, (SDR-PR), Spec. for, **34**
***F 443-77** Bell-End Chlorinated Poly(Vinyl Chloride) (CPVC) Plastic Pipe Schedule 40, Spec. for, **34**
F 444-78 Scald-Preventing Devices and Systems in Bathing Areas, Consumer Safety Spec. for, **46**
***F 445-78** Thermal Shock-Preventing Devices and Systems in Showering Areas, Consumer Safety Spec. for, **46**
***F 446-78** Grab Bars and Accessories Installed in the Bathing Area, Consumer Safety Spec. for, **46**
***F 447-76** V-Style Blade Plate, Spec. for, **46**
F 448-75T Steady-State Primary Photocurrent, Measuring, **43**
***F 449-76** Subsurface Installation of Corrugated Thermoplastic Tubing for Agricultural Drainage or Water Table Control, Rec. Practice for, **34**
***F 450-76** Vacuum Cleaner Hose for Durability and Reliability, Testing, **46**
***F 451-76** Acrylic Bone Cements, Spec. for, **46**
***F 452-76** Preformed Cranioplasty Plates, Spec. for, **46**
***F 453-76** Hooked Intramedullary Pins, Spec. for, **46**
***F 454-76** Intramedullary Pins, Spec. for, **46**
***F 455-78** Solid Cross-Section Intramedullary Nails, Spec. for, **46**
***F 456-76** Pinhole Flex Life of Films by Axial Vibration of a Tubular Sample, Test for, **21**
***F 457-76** Speed and Distance Calibration of a Fifth Wheel Equipped with Either Analog or Digital Instrumentation, **38**
F 458-78 Nondestructive Pull Testing of Wire Bonds, Rec. Practice for, **43**
F 459-76 Pull Strength of Microelectronic Wire Bonds, Measuring, **43**
***F 460-76** Relative Cornering and Aligning Stiffnesses of Passenger Car Tires, Test for, **38**
***F 462-79** Slip-Resistant Bathing Facilities, Spec. for, **46**
***F 463-76** Fat in Meat and Meat Products by Ether Extraction, Test for, **46**
***F 464-76** Fat in Meat and Meat Products by the Foss-let Fat Analyzer Techniques, Test for, **46**
***F 465-76** Precision and Accuracy Data on ASTM Method for the Analysis of Meat and Meat Products, Rec. Practice for Developing, **46**
***F 466-79** Small-Signal Scattering Parameters of Low-Power Transistors in the 0.2 to 2.0-GHz Frequency Range, Test for, **43**
F 467-76T Nonferrous Nuts for General Use, Spec. for, **4, 6, 7, 8**
F 468-76T Nonferrous Bolts, Hex Cap Screws, and Studs for General Use, Spec. for, **4, 6, 7, 8**
***F 469-78** Assessment of Compatibility of Nonporous Polymeric Materials for Surgical Implants with Regard to Effect of Materials on Tissue, Practice for, **46**
***F 470-76** Caking Temperature of Dry Electrostatic Toner, Rec. Practice for, **20**
***F 471-76** Combination Locks, Def. of Terms Relating to, **46**
F 472-76 Alpine Skis, Geometric Terms and Definitions for, **46**
F 473-76 Binding Mounting Area Dimensions on Alpine Skis, Spec. for, **46**
F 474-76 Static Screw Retention Strength of Binding Mounting Area on Alpine Skis, Spec. for, **46**
***F 475-77** Test Screw Used in Screw-Retention Test of Binding Mounting Area on Alpine Skis, Spec. for, **46**
***F 476-76** Security of Swinging Door Assemblies, Tests for, **46**
***F 477-76** Elastomeric Seals (Gaskets) for Joining Plastic Pipe, Spec. for, **34**
***F 478-79** In-Service Care of Insulating Line Hose and Covers, Spec. for, **40**
***F 479-79** In-Service Care of Insulating Blankets, Spec. for, **40**
***F 480-77** Thermoplastic Water Well Casing Pipe and Couplings Made in Standard Dimension Ratios (SDR), Spec. for, **34**
***F 481-76** Installation of Thermoplastic Pipe and Corrugated Tubing in Septic Tank Leach Fields, Rec. Practice for, **34**
***F 482-77** Total Immersion Corrosion Test for Tank-Type Aircraft Maintenance Chemicals, **25**
***F 483-77** Total Immersion Corrosion Test for Aircraft Maintenance Chemicals, **25**
***F 484-77** Stress Crazing of Acrylic Plastics in Contact with Liquid or Semi-Liquid Compounds, Test for, **25**
***F 485-76** Effects of Cleaners on Unpainted Aircraft Surfaces, Test for, **25**
F 486-76 Vacuum Cleaners, Rec. Practice for Preparation of Use and Care Booklets for, **46**
***F 487-78** Fine Aluminum-1% Silicon Wire for Semiconductor Lead-Bonding, Spec. for, **43**
***F 488-76T** Total Bacterial Count in Water Used for Processing Electron and Microelectronic Devices, Test for, **31, 43**
***F 489-77** Static Coefficient of Friction of Shoe Sole and Heel Materials as Measured by the James Machine, Test for, **46**
***F 490-77** Microscopical Sizing and Counting Particles on Membrane Filters Using Image Shear, **25**
***F 491-77** Poly(Vinylidene Fluoride) (PVDF) Plastic-Lined Ferrous Metal Pipe and Fittings, Spec. for, **34**
***F 492-77** Propylene and Polypropylene (PP) Plastic-Lined Ferrous Metal Pipe and Fittings, Spec. for, **34**
***F 493-78a** Solvent Cements for Chlorinated Poly(Vinyl Chloride) (CPVC) Plastic Pipe and Fittings, Spec. for, **34**
***F 494-78** Primary Filter Integrity for Vacuum Cleaners, Evaluating, **46**
***F 495-77** Ignition Loss of Gasket Materials Containing Nonorganic Fibers, Test for, **38**
***F 496-78** In-Service Care of Insulating Gloves and Sleeves, Spec. for, **40**
***F 497-77** Use of the Electric Typewriter as a Test Instrument, Practice for, **20**
***F 498-77** Center Spring Constant and Spring Constant Balance of Alpine Skis, Test for, **46**
***F 499-78** Installation of Wood Underlayment and Preparation of the Surface to Receive Resilient Flooring, Rec. Practice for, **46**
***F 500-77** Self-Curing Acrylic Resins Used in Neurosurgery, Spec. for, **46**
***F 501-77** Aerospace Materials Response to Flame, with Vertical Test Specimen (for Aerospace Vehicles Standard Conditions), Test for, **25**
***F 502-77** Effects of Cleaning and Chemical Maintenance Materials on Painted Aircraft Surfaces, Determination of, **25**
***F 503-77** Aircraft Cleaning Compounds, Liquid Type, for Storage Stability Testing, Rec. Practice for Preparing, **25**
***F 504-77** Release Moments of Adult Alpine Ski Bindings, Measuring, **46**
***F 505-77** Imaging Properties of Liquid Electrostatic Toners, Rec. Practice for the Comparative Evaluation of the, **20**
***F 506-77** Direct Image Paper Offset Masters, Rec. Practice

EXHIBIT 8

1980 Annual Book of ASTM Standards

Index

1980

A. FERROUS METALS

A 1-76 Carbon Steel Tee Rails, Spec. for, 4
A 2-69 Steel Girder Rails of Plain, Grooved, and Guard Types, Spec. for, 4
A 3-78 Low, Medium and High Carbon, (Non-Heat-Treated) Steel Joint Bars, Spec. for, 4
A 4 Discontinued—Replaced by A 3
A 5 Discontinued—Replaced by A 3
A 6-79b Rolled Steel Plates, Shapes, Sheet Piling, and Bars for Structural Use, Spec. for General Requirements for, 4
A 7 Discontinued—Replaced by A 36 (for rolled shapes), A 283, A 663, A 675
A 8 Discontinued
A 9 Discontinued
A 10 Discontinued—Replaced by A 283
A 11 Discontinued—Replaced by A 113
A 12 Discontinued—Replaced by A 131
A 13 Discontinued—Replaced by A 131
A 14 Discontinued—Replaced by A 68
A 15 Discontinued—Replaced by A 615
A 16 Discontinued—Replaced by A 616
A 17 Discontinued—Replaced by A 273, A 274
A 18 Discontinued—Replaced by A 235, A 236, A 237, A 238
A 19 Discontinued—Replaced by A 236
A 20-79b Steel Plates for Pressure Vessels, Spec. for General Requirements for, 4
A 21-78 Carbon Steel Axles, Non-Heat-Treated and Heat-Treated, for Railway Use, Spec. for, 4
A 22 Discontinued—Replaced by A 504
A 23 Discontinued—Replaced by A 504
A 24 Discontinued—Replaced by A 504
A 25-79 Wrought Steel Wheels for Electric Railway Service, Spec. for, 4
A 26 Discontinued—Replaced by A 551
A 27-79 Mild- to Medium-Strength Carbon-Steel Castings for General Application, Spec. for, 2
A 28 Discontinued
A 29-79 Steel Bars, Carbon and Alloy, Hot-Rolled and Cold-Finished, Spec. for General Requirements for, 5
A 30 Discontinued
A 31-76 Boiler Rivet Steel and Rivets, Spec. for, 4
A 32 Discontinued—Replaced by A 107, A 108
A 33 Discontinued—Replaced by E 30
A 34-70(1976) Magnetic Materials, Testing, 44
A 35 Discontinued
A 36-77a Structural Steel, Spec. for, 4
A 37 Discontinued
A 38 Discontinued
A 39 Discontinued—Replaced by A 84
A 40 Discontinued—Replaced by A 84
A 41 Discontinued
A 42 Discontinued
A 43-75 Merchant Pig Iron, Spec. for, 2
A 44 Discontinued—Replaced by A 377
A 45 Discontinued
A 46 Discontinued
A 47-77 Malleable Iron Castings, Spec. for, 2
A 48-76 Gray Iron Castings, Spec. for, 2
A 49-78 Heat-Treated Carbon Steel Joint Bars, Spec. for, 4
A 50 Discontinued—Replaced by A 183
A 51 Discontinued—Replaced by A 183
A 52 Discontinued
A 53-79 Pipe, Steel, Black and Hot-Dipped, Zinc-Coated Welded and Seamless, Spec. for, 1
A 54 Discontinued—Replaced by A 107, A 108
A 55 Discontinued—Replaced by E 30
A 56 Discontinued
A 57 Discontinued—Replaced by A 504
A 58 Discontinued—Replaced by A 689
A 59 Discontinued—Replaced by A 689
A 60 Discontinued—Replaced by A 689
A 61 Discontinued—Replaced by A 616
A 62 Discontinued
A 63 Discontinued—Replaced by A 237, A 238
A 64 Discontinued—Replaced by E 30
A 65-78 Steel Track Spikes, Spec. for, 4
A 66-78 Steel Screw Spikes, Spec. for, 4
A 67-78 Steel Tie Plates, Low-Carbon and High-Carbon Hot-Worked, Spec. for, 4
A 68 Discontinued—Replaced by A 689
A 69 Discontinued
A 70 Discontinued—Replaced by A 285
A 71 Discontinued
A 72 Discontinued
A 73 Discontinued
A 74-75 Cast Iron Soil Pipe and Fittings, Spec. for, 2
A 75 Discontinued—Replaced by A 47
A 76-64(1970) Low-Carbon Steel Track Bolts and Nuts, Spec. for, 4
A 77 Discontinued
A 78 Discontinued—Replaced by A 283
A 79 Discontinued—Replaced by A 84
A 80 Discontinued—Replaced by A 107, A 108
A 81 Discontinued
A 82-79 Cold-Drawn Steel Wire for Concrete Reinforcement, Spec. for, 4
A 83 Discontinued—Replaced by A 192
A 84 Discontinued
A 85 Discontinued
A 86 Discontinued
A 87 Discontinued—Replaced by A 27
A 88 Discontinued—Replaced by A 48
A 89 Discontinued—Replaced by A 285
A 90-69(1978) Weight of Coating on Zinc-Coated (Galvanized) Iron or Steel Articles, Tests for, 3
A 91 Discontinued
A 92 Discontinued
A 93 Discontinued—Replaced by A 525
A 94 Discontinued
A 95 Discontinued—Replaced by A 216
A 96 Discontinued—Replaced by A 193
A 97 Discontinued
A 98-64(1974) Spiegeleisen, Spec. for, 2
A 99-76 Ferromanganese, Spec. for, 2
A 100-69(1974) Ferrosilicon, Spec. for, 2
A 101-73 Ferrochromium, Spec. for, 2
A 102-76 Ferrovanadium, Spec. for, 2
A 103 Discontinued—Replaced by E 32
A 104 Discontinued—Replaced by E 31
A 105-79 Forgings, Carbon Steel, for Piping Components, Spec. for, 1
A 106-79b Seamless Carbon Steel Pipe for High-Temperature Service, Spec. for, 1
A 107 Discontinued—Replaced by A 575, A 576
A 108-79 Steel Bars, Carbon, Cold-Finished, Standard Quality, Spec. for, 5
A 109-72(1979) Steel, Carbon, Cold-Rolled Strip, Spec. for, 3
A 109M-77 Steel, Carbon, Cold-Rolled Strip, [Metric] Spec. for, 3
A 110 Discontinued—Replaced by A 90
A 111-66(1975) Zinc-Coated (Galvanized) "Iron" Telephone and Telegraph Line Wire, Spec. for, 3
A 112-76 Zinc-Coated (Galvanized) Steel Tie Wires, Spec. for, 3
A 113 Discontinued
A 114 Discontinued
A 115 Discontinued
A 116-73(1978) Zinc-Coated (Galvanized) Iron or Steel Farm-Field and Railroad Right-of-Way Wire Fencing, Spec. for, 3
A 117 Discontinued—Replaced by A 392
A 118 Discontinued
A 119 Discontinued—Replaced by E 44
A 120-79 Pipe, Steel, Black and Hot-Dipped Zinc-Coated (Galvanized) Welded and Seamless, for Ordinary Uses, Spec. for, 1
A 121-77 Zinc-Coated (Galvanized) Steel Barbed Wire, Spec. for, 3
A 122 Discontinued—Replaced by A 475
A 123-78 Zinc (Hot-Galvanized) Coatings on Products Fabricated from Rolled, Pressed, and Forged Steel Shapes, Plates, Bars, and Strip, Spec. for, 3
A 124 Discontinued
A 125-73(1979) Heat-Treated Steel Helical Springs, Spec. for, 5
A 126-73(1979) Gray Iron Castings for Valves, Flanges, and Pipe Fittings, Spec. for, 2
A 127 Redesignated A 340
A 128-79a Austenitic Manganese Steel Castings, Spec. for, 2
A 129 Discontinued
A 130 Discontinued—Replaced by E 30
A 131-78 Structural Steel for Ships, Spec. for, 4
A 132-74(1979) Ferromolybdenum, Spec. for, 2
A 133 Discontinued—Replaced by A 237, A 238
A 134-74 Electric-Fusion (Arc)-Welded Steel Plate Pipe (Sizes 16 in. and Over), Spec. for, 1
A 135-79 Electric-Resistance-Welded Steel Pipe, Spec. for, 1

A 136 Discontinued
A 137 Discontinued
A 138 Discontinued
A 139-74 Electric-Fusion (Arc)-Welded Steel Pipe (Sizes 4 in. and over), Spec. for, 1
A 140 Discontinued
A 141 Discontinued—Replaced by A 502
A 142 Discontinued—Replaced by A 716
A 143-74(1979) Safeguarding Against Embrittlement of Hot-Dip Galvanized Structural Steel Products and Procedure for Detecting Embrittlement, Rec. Practice for, 3
A 144-73(1979) Ferrotungsten, Spec. for, 2
A 145 Discontinued—Replaced by A 132
A 146-64(1979) Molybdenum Oxide Products, Spec. for, 2
A 147-51(1979) Heat-Treated Steel Leaf Springs, Spec. for, 5
A 148-73(1979) High-Strength Steel Castings for Structural Purposes, Spec. for, 2
A 149 Discontinued
A 150 Discontinued
A 151 Discontinued
A 152 Discontinued
A 153-78 Zinc Coating (Hot-Dip) on Iron and Steel Hardware, Spec. for, 3
A 154 Discontinued—Replaced by A 27
A 155 Discontinued—Replaced by A 671, A 672, A 691
A 156 Discontinued—Combined with A 146
A 157 Discontinued—Replaced by A 217, A 351
A 158 Discontinued—Replaced by A 335
A 159-77 Automotive Gray Iron Castings, Spec. for, 2
A 160 Discontinued—Replaced by A 617
A 161-79a Seamless Low-Carbon and Carbon-Molybdenum Steel Still Tubes for Refinery Service, Spec. for, 1
A 162 Discontinued
A 163 Discontinued
A 164-71 Electrodeposited Coatings of Zinc on Steel, Spec. for, 3, 9
A 165-71 Electrodeposited Coatings of Cadmium on Steel, Spec. for, 3, 9
A 166 Discontinued—Replaced by B 456
A 167-77 Stainless and Heat-Resisting Chromium-Nickel Steel Plate, Sheet, and Strip, Spec. for, 3
A 168 Discontinued—Replaced by A 296, A 297
A 169 Discontinued—Replaced by A 296, A 297
A 170 Discontinued—Replaced by A 297
A 171 Discontinued—Replaced by A 296, A 297
A 172 Discontinued—Replaced by A 296, A 297
A 173 Discontinued—Replaced by A 296, A 297
A 174 Discontinued—Replaced by A 296, A 297
A 175 Discontinued—Replaced by A 296, A 297
A 176-79 Stainless and Heat-Resisting Chromium Steel Plate, Sheet, and Strip, Spec. for, 3
A 177-69(1979) High-Strength Stainless and Heat-Resisting Chromium-Nickel Steel Sheet and Strip, Spec. for, 3
A 178-79b Electric-Resistance-Welded Carbon Steel Boiler Tubes, Spec. for, 1
A 179-79 Seamless Cold-Drawn Low-Carbon Steel Heat-Exchanger and Condenser Tubes, Spec. for, 1
A 180 Discontinued—Replaced by A 27
A 181-77 Forgings, Carbon Steel for General Purpose Piping, Spec. for, 1
A 182-79a Forged or Rolled Alloy-Steel Pipe Flanges, Forged Fittings, and Valves and Parts for High-Temperature Service, Spec. for, 1
A 183-68 Heat-Treated Carbon Steel Track Bolts and Carbon Steel Nuts, Spec. for, 4
A 184-79 Fabricated Deformed Steel Bar Mats for Concrete Reinforcement, Spec. for, 4
A 185-79 Welded Steel Wire Fabric for Concrete Reinforcement, Spec. for, 4
A 186 Discontinued—Replaced by A 504
A 187 Discontinued
A 188 Discontinued
A 189 Discontinued
A 190 Discontinued
A 191 Discontinued—Replaced by A 239
A 192-79 Seamless Carbon Steel Boiler Tubes for High-Pressure Service, Spec. for, 1
A 193-79a Alloy-Steel and Stainless Steel Bolting Materials for High-Temperature Service, Spec. for, 1
A 194-79 Carbon and Alloy Steel Nuts for Bolts for High-Pressure and High-Temperature Service, Spec. for, 1
A 195 Discontinued—Replaced by A 502
A 196 Discontinued
A 197-79 Cupola Malleable Iron, Spec. for, 2
A 198 Discontinued—Replaced by A 296, A 297
A 199-79a Seamless Cold-Drawn Intermediate Alloy-Steel Heat-Exchanger and Condenser Tubes, Spec. for, 1
A 200-79a Seamless Intermediate Alloy-Steel Still Tubes for Refinery Service, Spec. for, 1
A 201 Discontinued—Replaced by A 515, A 516
A 202-78 Pressure Vessel Plates, Alloy Steel, Chromium-Manganese-Silicon, Spec. for, 4
A 203-79a Pressure Vessel Plates, Alloy Steel, Nickel, Spec. for, 4
A 204-79a Pressure Vessel Plates, Alloy Steel, Molybdenum, Spec. for, 4
A 205 Discontinued—Replaced by A 233, A 251
A 206 Discontinued—Replaced by A 335
A 207 Discontinued
A 208 Discontinued—Replaced by A 239
A 209-79a Seamless Carbon-Molybdenum Alloy-Steel Boiler and Superheater Tubes, Spec. for, 1
A 210-79a Seamless Medium-Carbon Steel Boiler and Superheater Tubes, Spec. for, 1
A 211-75 Spiral-Welded Steel or Iron Pipe, Spec. for, 1
A 212 Discontinued—Replaced by A 515, A 516
A 213-79b Seamless Ferritic and Austenitic Alloy-Steel Boiler, Superheater, and Heat-Exchanger Tubes, Spec. for, 1
A 214-79 Electric-Resistance-Welded Carbon Steel Heat-Exchanger and Condenser Tubes, Spec. for, 1
A 215 Discontinued—Replaced by A 27
A 216-77 Carbon-Steel Castings Suitable for Fusion Welding for High-Temperature Service, Spec. for, 1, 2
A 217-79 Martensitic Stainless Steel and Alloy Steel Castings for Pressure-Containing Parts Suitable for High-Temperature Service, Spec. for, 1, 2
A 218 Discontinued—Replaced by A 475
A 219 Discontinued—Replaced by B 487, B 499, B 504, B 529, B 530
A 220-76 Pearlitic Malleable Iron Castings, Spec. for, 2
A 221 Discontinued—Replaced by A 296, A 297
A 222 Discontinued—Replaced by A 296, A 297
A 223 Discontinued—Replaced by A 296, A 297
A 224 Discontinued—Replaced by G 4
A 225-79a Pressure Vessel Plates, Alloy Steel, Manganese-Vanadium, Spec. for, 4
A 226-79 Electric-Resistance-Welded Carbon Steel Boiler and Superheater Tubes for High-Pressure Service, Spec. for, 1
A 227-77 Steel Wire, Hard-Drawn for Mechanical Springs, Spec. for, 3, 5
A 228-77 Steel Wire, Music Spring Quality, Spec. for, 3, 5
A 229-77 Steel Wire, Oil-Tempered for Mechanical Springs, Spec. for, 3, 5
A 230-77 Steel Wire, Oil-Tempered Carbon Valve Spring Quality, Spec. for, 3, 5
A 231-77 Chromium-Vandium Alloy Steel Spring Wire, Spec. for, 3, 5
A 232-77 Chromium-Vanadium Alloy Steel Valve Spring Quality Wire, Spec. for, 3, 5
A 233 Discontinued—Available from American Welding Society
A 234-79a Piping Fittings of Wrought Carbon Steel and Alloy Steel for Moderate and Elevated Temperatures, Spec. for, 1
A 235 Discontinued—Replaced by A 668
A 236-69a(1974) Carbon Steel Forgings for Railway Use, Spec. for, 4, 5
A 237 Discontinued—Replaced by A 668
A 238 Discontinued—Replaced by A 730
A 239-73(1978) Locating the Thinnest Spot in a Zinc (Galvanized) Coating on Iron or Steel Articles by the Preece Test (Cooper Sulfate Dip), Test for, 3
A 240-79 Heat-Resisting Chromium and Chromium-Nickel Stainless Steel Plate, Sheet, and Strip for Fusion-Welded Unfired Pressure Vessels, Spec. for, 3, 4
A 241 Discontinued—Replaced by A 67
A 242-79 High-Strength Low-Alloy Structural Steel, Spec. for, 4
A 243 Discontinued—Replaced by A 668
A 244 Discontinued—Replaced by A 504
A 245 Discontinued—Replaced by A 570, A 611
A 246 Discontinued—Replaced by A 245
A 247-67(1978) Microstructure of Graphite in Iron Castings, Evaluating the, 2, 11
A 248 Discontinued—Replaced by A 273, A 274
A 249-79b Welded Austenitic Steel Boiler, Superheater, Heat-Exchanger, and Condenser Tubes, Spec. for, 1
A 250-79a Electric-Resistance-Welded Carbon-Molybdenum Alloy-Steel Boiler and Superheater Tubes, Spec. for, 1
A 251 Discontinued—Available from American Welding Society
A 252-77a Welded and Seamless Steel Pipe Piles, Spec. for, 1
A 253 Discontinued
A 254-79 Copper Brazed Steel Tubing, Spec. for, 1
A 255-67(1979) End-Quench Test for Hardenability of

Steel, 5
A 256-46(1976) Compression Testing of Cast Iron, 2
A 257 Discontinued—Replaced by A 34
A 258 Discontinued—Replaced by A 34
A 259 Discontinued—Replaced by A 34
A 260 Discontinued
A 261 Discontinued
A 262-79 Susceptibility to Intergranular Attack in Stainless Steels, Rec.Practices for Detecting, 3, 10
A 263-79 Corrosion-Resisting Chromium Steel Clad Plate, Sheet, and Strip, Spec. for, 3, 4
A 264-79 Stainless Chromium-Nickle Steel Clad Plate, Sheet, and Strip, Spec. for, 3, 4
A 265-79 Nickel and Nickel-Base Alloy Clad Steel Plate, Spec. for, 3, 4
A 266-78 Forgings, Carbon Steel, for Pressure Vessel Components, Spec. for, 1, 4, 5
A 267 Discontinued
A 268-79a Seamless and Welded Ferritic Stainless Steel Tubing for General Service, Spec. for, 1
A 269-79a Seamless and Welded Austenitic Stainless Steel Tubing for General Service, Spec. for, 1
A 270-79 Seamless and Welded Austenitic Stainless Steel Sanitary Tubing, Spec. for, 1
A 271-79b Seamless Austenitic Chromium-Nickel Steel Still Tubes for Refinery Service, Spec. for, 1
A 272 Discontinued—Replaced by E 109
A 273 Discontinued—Replaced by A 711
A 274 Discontinued—Replaced by A 711
A 275-78 Magnetic Particle Examination of Steel Forgings, 5
A 276-79a Stainless and Heat-Resisting Steel Bars and Shapes, Spec. for, 5
A 277 Discontinued—Replaced by A 338
A 278-75 Gray Iron Castings for Pressure-Containing Parts for Temperatures Up to 650°F (345°C), Spec. for, 2
A 279 Discontinued—Replaced by G 31
A 280 Discontinued—Replaced by A 335
A 281 Discontinued—Replaced by A 27
A 282 Discontinued—Replaced by A 148
A 283-79 Low and Intermediate Tensile Strength Carbon Steel Plates, Shapes and Bars, Spec. for, 4
A 284-77 Low and Intermediate Tensile Strength Carbon-Silicon Steel Plates for Machine Parts and General Construction, Spec. for, 4
A 285-78 Pressure Vessel Plates, Carbon Steel, Low- and Intermediate-Tensile Strength, Spec. for, 4
A 286 Discontinued—Replaced by A 434
A 287 Discontinued
A 288-77 Carbon and Alloy Steel Forgings for Magnetic Retaining Rings for Turbine Generators, Spec. for, 5
A 289-70a(1975) Alloy Steel Forgings for Nonmagnetic Retaining Rings for Generators, Spec. for, 5
A 290-78 Carbon and Alloy Steel Forgings for Rings for Reduction Gears, Spec. for, 5
A 291-78 Carbon and Alloy Steel Forgings for Pinions and Gears for Reduction Gears, Spec. for, 5
A 292 Discontinued—Replaced by A 469
A 293-77a Steel Forgings, Carbon and Alloy, for Turbine Rotors and Shafts, Spec. for, 5
A 294-79 Alloy Steel Forgings for Turbine Wheels and Disks, Spec. for, 5
A 295-79 High-Carbon Ball and Roller Bearing Steel, Spec. for, 5
A 296 Discontinued—Replaced by A 743 and A 744
A 297-79a Heat-Resistant Iron Chromium and Iron-Chromium-Nickel Alloy Castings for General Application, Spec. for, 2
A 298 Discontinued—Available from Americal Welding Society
A 299-79b Pressure Vessel Plates, Carbon Steel, Manganese-Silicon, Spec. for, 4
A 300 Discontinued
A 301 Discontinued—Replaced by A 387
A 302-79b Pressure Vessel Plates, Alloy Steel, Manganese-Molybdenum and Manganese-Molybdenum-Nickel, Spec. for, 4
A 303 Discontinued—Replaced by A 570
A 304-79 Alloy Steel Bars Subject to End-Quench Hardenability Requirements, Spec. for, 5
A 305 Discontinued—Replaced by A 615, A 616, A 617
A 306 Discontinued—Replaced by A 663, A 675
A 307-78 Carbon Steel Externally Threaded Standard Fasteners, Spec. for, 1, 4
A 308-78 Steel, Sheet, Cold-Rolled, Long Terne Coated, Spec. for, 3
A 309-54(1975) Weight and Composition of Coating on Long Terne Sheet by the Triple Spot Test, Test for, 3
A 310 Redesignated A 345
A 311-79 Stress-Relieved Cold-Drawn Carbon Steel Bars Subject to Mechanical Property Requirements, Spec. for, 5
A 312-79a Seamless and Welded Austenitic Stainless Steel Pipe, Spec. for, 1
A 313-76 Chromium-Nickel Stainless and Heat-Resisting Steel Spring Wire, Spec. for, 3, 5
A 314-79 Stainless and Heat-Resisting Steel Billets and Bars for Forging, Spec. for, 5
A 315 Discontinued—Replaced by A 335
A 316 Discontinued—Available from American Welding Society
A 317 Discontinued—Replaced by E 381
A 318 Discontinued—Replaced by A 370
A 319-71(1975) Gray Iron Castings for Elevated Temperatures for Non-Pressure Containing Parts, Spec. for, 2
A 320-79a Alloy-Steel Bolting Materials for Low-Temperature Service, Spec. for, 1
A 321-79 Steel Bars, Carbon, Quenched and Tempered, Spec. for, 5
A 322-76 Hot-Rolled Alloy Steel Bars, Spec. for, 5
A 323-76 Ferroboron, Spec. for, 2
A 324-73(1979) Ferrotitanium, Spec. for, 2
A 325-79 High-Strength Bolts for Structural Steel Joints, Spec. for, 4
A 325M-79 High-Strength Bolts for Structural Steel Joints, Including Suitable Nuts and Plain Hardened Washers (Metric), Spec. for, 4
A 326-67(1976) Zinc-Coated (Galvanized) High Tensile Steel Telephone and Telegraph Line Wire, Spec. for, 3
A 327-72 Impact Testing of Cast Irons, 2
A 328-75a Steel Sheet Piling, Spec. for, 4
A 329 Discontinued—Replaced by A 551
A 330 Discontinued—Replaced by A 370
A 331-74(1979) Steel Bars, Alloy, Cold-Finished, Spec. for, 5
A 332 Discontinued—Replaced by A 689
A 333-79 Seamless and Welded Steel Pipe for Low-Temperature Service, Spec. for, 1
A 334-79 Seamless and Welded Carbon and Alloy-Steel Tubes for Low-Temperature Service, Spec. for, 1
A 335-79a Seamless Ferritic Alloy Steel Pipe for High-Temperature Service, Spec. for, 1
A 336-79 Alloy Steel Forgings for Pressure and High-Temperature Parts, Spec. for, 1, 4, 5
A 337 Discontinued—Replaced by A 392
A 338-61(1977) Malleable Iron Flanges, Pipe Fittings, and Valve Parts for Railroad, Marine, and Other Heavy Duty Service at Temperatures up to 650°F (345°C), Spec. for, 2
A 339 Discontinued—Replaced by A 536
A 340-77 Magnetic Testing, Def. of Terms, Symbols, and Conversion Factors Relating to, 44
A 341-69(1979) Direct-Current Magnetic Properties of Materials Using D-C Permeameters and the Ballistic Test Methods, Test for, 44
A 342-64(1976) Permeability of Feebly Magnetic Materials, Tests for, 44
A 343-69(1974) Alternating-Current Magnetic Properties of Materials at Power Frequencies Using the Wattmeter-Ammeter-Voltmeter Method and 25-cm Epstein Test Frame, Test for, 44
A 344 Discontinued—Replaced by A 712, A 717, A 718, A 719, and A 720
A 345-75(1979) Flat-Rolled Electrical Steels for Magnetic Applications, Spec. for, 3, 44
A 346-74 Alternating-Current Magnetic Performance of Laminated Core Specimens Using the Modified Hay Bridge Method, Tests for, 44
A 347-74 Alternating-Current Magnetic Properties of Materials Using the Modified Hay Bridge Method with 25-cm Epstein Frame, Test for, 44
A 348-68(1977) Alternating-Current Magnetic Properties of Materials Using the Wattmeter-Ammeter-Voltmeter Method, 100 to 10,000 Hz and 25-cm Epstein Frame, Test for, 44
A 349-68(1977) Alternating-Current Magnetic Properties of Materials Using the Wattmeter-Ammeter-Voltmeter Method, 50 to 60 Hz and 50-cm Epstein Frame, Test for, 44
A 350-79 Forgings, Carbon and Low-Alloy Steel, Requiring Notch Toughness Testing for Piping Components, Spec. for, 1
A 351-79 Austenitic Steel Castings for High-Temperature Service, Spec. for, 1, 2
A 352-79 Ferritic Steel Castings for Pressure-Containing Parts Suitable for Low-Temperature Service, Spec. for, 1, 2
A 353-79a Pressure Vessel Plates, Alloy Steel, 9 Percent Nickel, Double-Normalized and Tempered, Spec. for, 4
A 354-79 Quenched and Tempered Alloy Steel Bolts, Studs, and Other Externally Threaded Fasteners, Spec. for, 1, 4
A 355 Discontinued
A 356-77 Heavy-Walled Carbon and Low-Alloy Steel Castings for Steam Turbines, Spec. for, 2
A 357 Discontinued—Replaced by A 387
A 358-79a Electric-Fusion-Welded Austenitic Chromium-Nickel Alloy Steel Pipe for High-Temperature Service, Spec. for, 1
A 359 Discontinued—Replaced by A 370
A 360 Discontinued
A 361-76 Steel Sheet, Zinc-Coated (Galvanized) by the Hot-Dip Process for Roofing and Siding, Spec. for, 3
A 362 Discontinued
A 363-72(1976) Zinc-Coated (Galvanized)Steel Overhead Ground Wire Strand, Spec. for, 3
A 364 Discontinued—Replaced by A 434
A 365 Discontinued—Replaced by A 619, A 620
A 366-72(1979) Steel, Carbon, Cold-Rolled Sheet, Commercial Quality, Spec. for, 3
A 367-60(1978) Chill Testing of Cast Iron, 2
A 368-76 Stainless and Heat-Resisting Steel Wire Strand, Spec. for, 3
A 369-79a Carbon and Ferritic Alloy Steel Forged and Bored Pipe for High-Temperature Service, Spec. for, 1
A 370-77 Mechanical Testing of Steel Products, Methods and Def. for, 1, 2, 3, 4, 5, 10
A 371 Discontinued—Available from American Welding Society
A 372-78 Carbon and Alloy Steel Forgings for Thin-Walled Pressure Vessels, Spec. for, 4, 5
A 373 Discontinued—Combined with A 36
A 374 Discontinued—Replaced by A 606, A 607
A 375 Discontinued—Replaced by A 606, A 607
A 376-79b Seamless Austenitic Steel Pipe for High-Temperature Central-Station Service, Spec. for, 1
A 377-79 Gray Iron and Ductile Iron Pressure Pipe, Spec. for, 2
A 378 Discontinued—Replaced by A 345
A 379 Discontinued—Replaced by A 345
A 380-78 Cleaning and Descaling Stainless Steel Parts, Equipment, and Systems, Rec. Practice for, 3
A 381-79 Metal-Arc-Welded Steel Pipe for Use with High-Pressure Transmission Systems, Spec. for, 1
A 382 Discontinued
A 383-77a Axles, Railway, Carbon Steel, Untreated for Export and General Industrial Use, Spec. for, 4, 5
A 384-76 Safeguarding Against Warpage and Distortion During Hot-Dip Galvanizing of Steel Assemblies, Rec. Practice for, 3
A 385-76 High-Quality Zinc Coatings (Hot-Dip), Rec. Practice for Providing, 3
A 386-78 Zinc Coating (Hot-Dip) on Assembled Steel Products, Spec. for, 3
A 387-79b Pressure Vessel Plates, Alloy Steel, Chromium-Molybdenum, Spec. for, 4
A 388-78 Ultrasonic Examination of Heavy Steel Forgings, Rec. Practice for, 5
A 389-77a Alloy Steel Castings Specially Heat-Treated for Pressure-Containing Parts Suitable for High-Temperature Service, Spec. for, 1, 2
A 390-66(1975) Zinc-Coated (Galvanized) Steel Poultry Netting (Hexagonal and Straight Line) and Woven Steel Poultry Fencing, Spec. for, 3
A 391-65(1975) Alloy Steel Chain, Spec. for, 5
A 392-74 Zinc-Coated Steel Chain-Link Fence Fabric, Spec. for, 3
A 393 Discontinued—Replaced by A 262
A 394-78 Galvanized Steel Transmission Tower Bolts, Spec. for, 4
A 395-77 Ferritic Ductile Iron Pressure-Retaining Castings for Use at Elevated Temperatures, Spec. for, 2
A 396 Discontinued—Replaced by A 536
A 397 Discontinued
A 398 Discontinued—Available from American Welding Society
A 399 Discontinued—Available from American Welding Society
A 400-69(1977) Selection of Steel Bar Compositions According to Section, Rec. Practice for, 5
A 401-77 Chromium-Silicon Alloy Steel Spring Wire, Spec. for, 3, 5
A 402 Discontinued
A 403-79 Wrought Austenitic Stainless Steel Piping Fittings, Spec. for, 1
A 404 Discontinued
A 405-79a Seamless Ferritic Alloy-Steel Pipe Specially Heat Treated for High-Temperature Service, Spec. for, 1
A 406 Discontinued
A 407-77 Steel Wire, Hard-Drawn, for Coiled-Type Springs, Spec. for, 3, 5
A 408 Discontinued—Replaced by A 615
A 409-79a Welded Large Outside Diameter Light-Wall Austenitic Chromium-Nickel Alloy Steel Pipe for Corrosive or High-Temperature Service, Spec. for, 1
A 410 Discontinued
A 411-65(1976) Zinc-Coated (Galvanized) Low-Carbon Steel Armor Wire, Spec. for, 3
A 412-75 Stainless and Heat-Resisting Chromium-Nickel-Manganese Steel Plate, Sheet, and Strip, Spec. for, 3
A 413-72 Carbon Steel Chain, Spec. for, 5
A 414-79 Carbon Steel Sheet for Pressure Vessels, Spec. for, 3, 4
A 415 Discontinued—Replaced by A 569
A 416-74 Uncoated Seven-Wire Stress-Relieved Strand for Prestressed Concrete, Spec. for, 4
A 417-74 Steel Wire, Hard-Drawn, for Zig-Zag, Square-Formed, and Sinous-Type Upholstery Spring Units, Spec. for, 3, 5
A 418-77 Ultrasonic Inspection of Turbine and Generator Steel Rotor Forgings, 5
A 419 Discontinued
A 420-79 Piping Fittings of Wrought Carbon Steel and Alloy Steel for Low-Temperature Service, Spec. for, 1
A 421-78 Uncoated Stress-Relieved Wire for Prestressed Concrete, Spec. for, 4
A 422-64(1979) Butt Welds in Still Tubes for Refinery Service, Spec. for, 1
A 423-79a Seamless and Electric Welded Low-Alloy Steel Tubes, Spec. for, 1
A 424-73 Steel Sheet for Procelain Enameling, Spec. for, 3
A 425 Discontinued—Replaced by A 569
A 426-79 Centrifugally Cast Ferritic Alloy Steel Pipe for High-Temperature Service, Spec. for, 1
A 427-74 Wrought Alloy Steel Rolls for Cold and Hot Reduction, Spec. for, 5
A 428-68(1978) Weight of Coating on Aluminum-Coated Iron or Steel Articles, Test for, 3
A 429 Discontinued—Replaced by A 276
A 430-79 Austenitic Steel Forged and Bored Pipe for High-Temperature Service, Spec. for, 1
A 431 Discontinued—Replaced by A 615
A 432 Discontinued—Replaced by A 615
A 433 Discontinued
A 434-76 Steel Bars, Alloy, Hot-Rolled or Cold-Finished, Quenched and Tempered, Spec. for, 5
A 435-75 Straight-Beam Ultrasonic Examination of Steel Plates for Pressure Vessels, Spec. for, 4
A 436-78 Austenitic Gray Iron Castings, Spec. for, 2
A 437-77 Alloy-Steel Turbine-Type Bolting Material Specially Heat Treated for High-Temperature Service, Spec. for, 1
A 438-62(1974) Transverse Testing of Gray Cast Iron, 2
A 439-77 Austenitic Ductile Iron Castings, Spec. for, 2
A 440 Discontinued
A 441-79 High-Strength Low-Alloy Structural Manganese Vanadium Steel, Spec. for, 4
A 442-79b Pressure Vessel Plates, Carbon Steel, Improved Transition Properties, Spec. for, 4
A 443 Discontinued—Combined with A 370
A 444-78 Steel Sheet, Zinc-Coated (Galvanized) by the Hot-Dip Process for Culverts and Underdrains, Spec. for, 3
A 445 Discontinued—Replaced by A 395
A 446-76 Steel Sheet, Zinc-Coated (Galvanized) by the Hot-Dip Process, Structural (Physical) Quality, Spec. for, 3
A 447-79 Chromium-Nickel-Iron Alloy Castings (25-12 Class) for High-Temperature Service, Spec. for, 2
A 448 Discontinued
A 449-78a Quenched and Tempered Steel Bolts and Studs, Spec. for, 4
A 450-79a Carbon, Ferritic Alloy, and Austenitic Alloy Steel Tubes, Spec. for General Requirements for, 1
A 451-79 Centrifugally Cast Austenitic Steel Pipe for High-Temperature Service, Spec. for, 1
A 452-79 Centrifugally Cast Austenitic Steel Cold-Wrought Pipe for High-Temperature Service, Spec. for, 1
A 453-78 Bolting Materials, High-Temperature, 50 to 120 ksi Yield Strength, with Expansion Coefficients Comparable to Austenitic Steels, Spec. for, 1
A 454 Discontinued
A 455-79b Pressure Vessel Plates, Carbon Steel, High Strength Manganese, Spec. for, 4
A 456-71(1976) Magnetic Particle Inspection of Large Crankshaft Forgings, Spec. for, 5
A 457-71(1979) Hot-Worked, Hot-Cold-Worked, and Cold-Worked Alloy Steel Plate, Sheet, and Strip for High Strength at Elevated Temperatures, Spec. for, 3
A 458-79 Hot-Worked, Hot-Cold-Worked, and Cold-Worked Alloy Steel Bars for High Strength at Elevated Temperatures, Spec. for, 5
A 459-71(1975) Zinc-Coated Flat Steel Armoring Tape, Spec. for, 3
A 460-68(1976) Copper-Clad Steel Wire Strand, Spec. for, 3
A 461 Discontinued—Replaced by A 564, A 637, A 638, A 639
A 462 Discontinued—Replaced by E 165
A 463-77 Steel Sheet, Cold-Rolled, Aluminum-Coated Type 1,

Spec. for, 3
A 464 Discontinued—Replaced by E 376
A 465 Discontinued
A 466–73 Weldless Carbon Steel Chain, Spec. for, 5
A 467–72 Machine and Coil Chain, Spec. for, 5
A 468 Discontinued—Replaced by A 6 and A 341
A 469–77 Vacuum-Treated Steel Forgings for Generator Rotors, Spec. for, 5
A 470–78 Vacuum-Treated Carbon and Alloy Steel Forgings for Turbine Rotors and Shafts, Spec. for, 5
A 471–77 Vacuum-Treated Alloy Steel Forgings for Turbine Rotor Disks and Wheels, Spec. for, 5
A 472–74(1979) Heat Stability of Steam Turbine Shafts and Rotor Forgings, Test for, 5
A 473–79 Stainless and Heat-Resisting Steel Forgings, Spec. for, 5
A 474–68(1976) Aluminum-Coated Steel Wire Strand, Spec. for, 3
A 475–78 Zinc-Coated Steel Wire Strand, Spec. for, 3
A 476–70(1976) Ductile Iron Castings for Paper Mill Dryer Rolls, Spec. for, 2
A 477–79 Hot-Worked, Hot-Cold-Worked and Cold-Worked Alloy Steel Forgings and Forging Billets for High Strength at Elevated Temperatures, Spec. for, 5
A 478–76 Chromium-Nickel Stainless and Heat-Resisting Steel Weaving Wire, Spec. for, 3
A 479–79 Stainless and Heat-Resisting Steel Bars and Shapes for Use in Boilers and Other Pressure Vessels, Spec. for, 4, 5
A 480–79 Flat-Rolled Stainless and Heat-Resisting Steel Plate, Sheet, and Strip, Spec. for General Requirements for, 3
A 481–73(1979) Chromium Metal, Spec. for, 2
A 482–76 Ferrochrome-Silicon, Spec. for, 2
A 483–64(1974) Silicomanganese, Spec. for, 2
A 484–79 Stainless and Heat-Resisting Wrought Steel Products (Except Wire), Spec. for General Requirements for, 5
A 485–79 High Hardenability Bearing Steels, Spec. for, 5
A 486–74(1979) Steel Castings for Highway Bridges, Spec. for, 2
A 487–79a Steel Castings Suitable for Pressure Service, Spec. for, 1, 2
A 488–79 Qualification of Procedures and Personnel for the Welding of Steel Castings, Rec. Practice for, 2
A 489–72(1979) Carbon Steel Eyebolts, Spec. for, 4
A 490–79 Quenched and Tempered Alloy Steel Bolts for Structural Steel Joints, Spec. for, 4
A 491–74 Aluminum-Coated Steel Chain-Link Fence Fabric, Spec. for, 3
A 492–76 Stainless and Heat-Resisting Steel Rope Wire, Spec. for, 3
A 493–79 Stainless and Heat-Resisting Steel for Cold Heading and Cold Forging—Bar and Wire, Spec. for, 3
A 494–79 Nickel and Nickel Alloy Castings, Spec. for, 2, 8
A 495–76 Calcium-Silicon and Calcium-Maganese-Silicon, Spec. for, 2
A 496–78 Deformed Steel Wire for Concrete Reinforcement, Spec. for, 4
A 497–79 Welded Deformed Steel Wire Fabric for Concrete Reinforcement, Spec. for, 4
A 498–68(1979) Seamless and Welded Carbon, Ferritic, and Austenitic Alloy Steel Heat-Exchanger Tubes with Integral Fins, Spec. for, 1
A 499–76 Hot-Rolled Rail Carbon Steel Bars and Shapes, Spec. for, 5
A 500–78 Cold-Formed Welded and Seamless Carbon Steel Structural Tubing in Rounds and Shapes, Spec. for, 1, 4
A 501–76 Hot-Formed Welded and Seamless Carbon Steel Structural Tubing, Spec. for, 1, 4
A 502–76 Steel Structural Rivits, Spec. for, 4
A 503–75 Ultrasonic Examination of Large Forged Crankshafts, Spec. for, 5
A 504–77 Wrought Carbon Steel Wheels, Spec. for, 4
A 505–78 Steel Sheet and Strip, Alloy, Hot-Rolled and Cold-Rolled, Spec. for General Requirements for, 3
A 506–73 Steel Sheet and Strip, Alloy, Hot-Rolled and Cold-Rolled, Regular Quality, Spec. for, 3
A 507–73 Steel Sheet and Strip, Alloy, Hot-Rolled and Cold-Rolled, Drawing Quality, Spec. for, 3
A 508–79 Quenched and Tempered Vacuum-Treated Carbon and Alloy Steel Forgings for Pressure Vessels, Spec. for, 4, 5
A 509–68(1974) Steel Forging, Def. of, 5
A 510–77 Wire Rods and Coarse Round Wire, Carbon Steel, Spec. for General Requirements for, 3
A 510M–77 Wire Rods and Coarse Round Wire, Carbon Steel, [Metric] Spec. for General Requirements for, 3
A 511–79 Seamless Stainless Steel Mechanical Tubing, Spec. for, 1
A 512–79 Cold-Drawn Buttweld Carbon Steel Mechanical Tubing, Spec. for, 1
A 513–79 Electric-Resistance-Welded Carbon and Alloy Steel Mechanical Tubing, Spec. for, 1
A 514–77 High-Yield Strength, Quenched and Tempered Alloy Steel Plate, Suitable for Welding, Spec. for, 4
A 515–79b Pressure Vessel Plates, Carbon Steel, for Intermediate- and Higher-Temperature Service, Spec. for, 4
A 516–79b Pressure Vessel Plates, Carbon Steel, for Moderate- and Lower-Temperature Service, Spec. for, 4
A 517–79a Pressure Vessel Plates, Alloy Steel, High-Strength, Quenched and Tempered, Spec. for, 4
A 518–64(1974) Corrosion-Resistant High-Silicon Cast Iron, Spec. for, 2
A 519–79 Seamless Carbon and Alloy Steel Mechanical Tubing, Spec. for, 1
A 520–72(1979) Seamless and Electric-Resistance-Welded Carbon Steel Tubular Products for High-Temperature Service Conforming to ISO Recommendations for Boiler Construction, Spec. for Supplementary Requirements for, 1
A 521–77 Steel, Closed-Impression Die Forgings for General Industrial Use. Spec. for, 5
A 522–76 Forged or Rolled 8 and 9% Nickel Alloy Steel Flanges, Fittings, Valves, and Parts for Low-Temperature Service, Spec. for, 1
A 523–78 Plain End Seamless and Electric-Resistance-Welded Steel Pipe for High-Pressure Pipe-Type Cable Circuits, Spec. for, 1
A 524–79a Seamless Carbon Steel Pipe for Atmospheric and Lower Temperatures, Spec. for, 1
A 525–79 Steel Sheet, Zinc-Coated (Galvanized) by the Hot-Dip Process, General Requirements, Spec. for, 3
A 526–71(1975) Steel Sheet, Zinc-Coated (Galvanized) by the Hot-Dip Process, Commercial Quality, Spec. for, 3
A 527–71(1975) Steel Sheet, Zinc-Coated (Galvanized) by the Hot-Dip Process, Lock-Forming Quality, Spec. for, 3
A 528–71(1975) Steel Sheet, Zinc-Coated (Galvanized) by the Hot-Dip Process, Drawing Quality, Spec. for, 3
A 529–75 Structural Steel with 42,000 psi (290 MPa) Minimum Yield Point (½ in. (12.7mm) Maximum Thickness), Spec. for, 4
A 530–79a Specialized Carbon and Alloy Steel Pipe, Spec. for General Requirements for, 1
A 531–74(1979) Ultrasonic Inspection of Turbine-Generator Steel Retaining Rings, Rec. Practice for, 5
A 532–75a Abrasion-Resistant Cast Irons, Spec. for, 2
A 533–79a Pressure Vessel Plates, Alloy Steel, Quenched and Tempered, Manganese-Molybdenum and Manganese-Molybdenum-Nickel, Spec. for, 4
A 534–79 Carburizing Steels for Anti-Friction Bearings, Spec. for, 5
A 535–79 Special-Quality Ball and Roller Bearing Steel, Spec. for, 5
A 536–77 Ductile Iron Castings, Spec. for, 2
A 537–79 Pressure Vessel Plates, Heat-Treated, Carbon-Manganese-Silicon Steel, Spec. for, 4
A 538–77 Pressure Vessel Plates, Alloy Steel, Precipitation Hardening (Maraging), 18 Percent Nickel, Spec. for, 4
A 539–79 Electric-Resistance-Welded Coiled Steel Tubing for Gas and Fuel Oil Lines, Spec. for, 1
A 540–77a Alloy-Steel Bolting Materials for Special Applications, Spec. for, 1, 45
A 541–79a Steel Forgings, Carbon and Alloy, Quenched and Tempered, for Pressure Vessel Components, Spec. for, 4, 5
A 542–79 Pressure Vessel Plates, Alloy Steel, Quenched and Tempered Chromium-Molybdenum, Spec. for, 4
A 543–79a Pressure Vessel Plates, Alloy Steel, Quenched and Tempered Nickel-Chromium-Molybdenum, Spec. for, 4
A 544–77 Steel Wire, Carbon, Scrapless Nut Quality, Spec. for, 3
A 545–77 Steel Wire, Carbon, Cold-Heading Quality, for Machine Screws, Spec. for, 3
A 546–77 Steel Wire, Medium-High-Carbon, Cold-Heading Quality, for Hexagon-Head Bolts, Spec. for, 3
A 547–77 Steel Wire, Alloy, Cold-Heading Quality, for Hexagon-Head Bolts, Spec. for, 3
A 548–77 Steel Wire, Carbon, Cold-Heading Quality, for Tapping or Sheet Metal Screws, Spec. for, 3
A 549–77 Steel Wire, Carbon, Cold-Heading Quality, for Wood Screws, Spec. for, 3
A 550–78 Ferrocolumbium, Spec. for, 2
A 551–65(1976) Steel Tires, Spec. for, 4
A 552 Discontinued—Replaced by A 689
A 553–79a Pressure Vessel Plates, Alloy Steel, Quenched and Tempered 8 and 9 Percent Nickel, Spec. for, 4
A 554–79 Welded Stainless Steel Mechanical Tubing, Spec. for, 1
A 555–79 Stainless and Heat-Resisting Steel Wire, Spec. for General Requirements for, 3
A 556–79 Seamless Cold-Drawn Carbon Steel Feedwater Heater Tubes, Spec. for, 1
A 557–79 Electric-Resistance-Welded Carbon Steel Feedwater Heater Tubes, Spec. for, 1
A 558 Discontinued—Available from American Welding Society
A 559 Discontinued—Available from American Welding Society
A 560–79 Chromium-Nickel Alloy Castings, Spec. for, 2
A 561–71(1978) Macroetch Testing of Tool Steel Bars, Rec. Practice for, 5
A 562–79a Pressure Vessel Plates, Carbon Steel, Manganese-Titanium for Glass or Diffused Metallic Coatings, Spec. for, 4
A 563–78a Carbon and Alloy Steel Nuts, Spec. for, 1, 4
A 564–79 Hot-Rolled and Cold-Finished Age-Hardening Stainless and Heat-Resisting Steel Bars and Shapes, Spec. for, 5
A 565–74 Martensitic Stainless Steel Bars, Forgings, and Forging Stock for High-Temperature Service, Spec. for, 5
A 566–68(1977) Alternating-Current Magnetic Properties of Materials Using Alternating Current Potentiometer and 25-cm Epstein Frame, Test for, 44
A 567–79 Iron, Cobalt, and Nickel-Base Alloy Castings for High Strength at Elevated Temperatures, Spec. for, 2
A 568–74 Steel, Carbon and High-Strength Low-Alloy Hot-Rolled Sheet, Hot-Rolled Strip, and Cold-Rolled Sheet, General Requirements, Spec. for, 3
A 568M–77 Steel, Carbon and High-Strength Low-Alloy Hot-Rolled Sheet and Cold-Rolled Sheet, [Metric] Spec. for General Requirements for, 3
A 569–72(1979) Steel, Carbon (0.15 Maximum, Percent), Hot-Rolled Sheet and Strip, Commercial Quality, Spec. for, 3
A 570–79 Hot-Rolled Carbon Steel Sheet and Strip, Structural Quality, Spec. for, 3, 4
A 571–71(1976) Austenitic Ductile Iron Castings for Pressure-Containing Parts Suitable for Low-Temperature Service, Spec. for, 2
A 572–79 High-Strength Low-Alloy Columbium-Vanadium Steels of Structural Quality, Spec. for, 4
A 573–77 Structural Carbon Steel Plates of Improved Toughness, Spec. for, 4
A 574–77 Alloy Steel Socket-Head Cap Screws, Spec. for, 4
A 575–73(1979) Merchant Quality Hot-Rolled Carbon Steel Bars, Spec. for, 5
A 576–79 Steel Bars, Carbon, Hot-Rolled, Special Quality, Spec. for, 5
A 577–77 Ultrasonic Angle-Beam Examinaticn of Steel Plates, Spec. for, 4
A 578–78 Straight-Beam Ultrasonic Examination of Plain and Clad Steel Plates for Special Applications, Spec. for, 4
A 579–77 Superstrength Alloy Steel Forgings, Spec. for, 5
A 580–79 Stainless and Heat-Resisting Steel Wire, Spec. for, 3
A 581–79 Free-Machining Stainless and Heat-Resisting Steel Wire, Spec. for, 3
A 582–79 Free-Machining Stainless and Heat-Resisting Steel Bars, Hot-Rolled or Cold-Finished, Spec. for, 5
A 583–79 Cast Steel Wheels for Railway Service, Spec. for, 4
A 584–68(1976) Aluminum-Coated Steel Farm-Field and Right-of-Way Fencing, Spec. for, 3
A 585–71(1975) Aluminum-Coated Steel Barbed Wire, Spec. for, 3
A 586–68(1976) Zinc-Coated Steel Structural Strand, Spec. for, 3
A 587–78 Electric-Welded Low-Carbon Steel Pipe for the Chemical Industry, Spec. for, 1
A 588–79a High-Strength Low-Alloy Structural Steel with 50,000 psi Minimum Yield Point to 4 in. Thick, Spec. for, 4
A 589–79 Seamless and Welded Carbon Steel Water Well Pipe, Spec. for, 1
A 590–72a(1977) Pressure Vessel Plates, Alloy Steel, Precipitation Hardening (Maraging), 12 Percent Nickel, Spec. for, 4
A 591–77 Steel Sheet, Cold-Rolled, Electrolytic Zinc-Coated, Spec. for, 3
A 592–74(1979) High-Strength Quenched and Tempered Low-Alloy Steel Forged Fittings and Parts for Pressure Vessels, Spec. for, 4, 5
A 593 Discontinued
A 594–69(1975) Carbon Steel Forgings with Special Magnetic Characteristics, Spec. for, 5
A 595–74 Steel Tubes, Low-Carbon, Tapered for Structural Use, Spec. for, 1, 4
A 596–69(1979) Direct-Current Magnetic Properties of Materials Using Ring Test Procedures and the Ballistic Methods, Test for, 44
A 597–79 Cast Tool Steel, Spec. for, 2
A 598–69(1979) Magnetic Properties of Magnetic Amplifier Cores, Test for, 44
A 599–77 Steel Sheet, Cold-Rolled, Tin-Coated by Electrodeposition, Spec. for, 3
A 600–79 High-Speed Tool Steel, Spec. for, 5
A 601–69(1974) Electrolytic Manganese Metal, Spec. for, 2
A 602–70(1976) Automotive Malleable Iron Castings, Spec. for, 2
A 603–70(1974) Zinc-Coated Steel Structural Wire Rope, Spec. for, 3
A 604–77 Macroetch Testing of Consumable Electrode Remelted Steel Bars and Billets, 3, 5
A 605–72(1977) Pressure Vessel Plates, Alloy Steel, Quenched and Tempered Nickel-Cobalt-Molybdenum-Chromium, Spec. for, 4
A 606–75 Steel Sheet and Strip, Hot-Rolled and Cold-Rolled, High Strength, Low-Alloy, with Improved Corrosion Resistance, Spec. for, 3
A 607–75 Steel Sheet and Strip, Hot-Rolled and Cold-Rolled, High-Strength, Low-Alloy Columbium and/or Vanadium, Spec. for, 3
A 608–79 Centrifugally Cast Iron-Chromium-Nickel High-Alloy Tubing for Pressure Application at High Temperatures, Spec. for, 1, 2
A 609–78 Longitudinal-Beam Ultrasonic Inspection for Carbon and Low-Alloy Steel Castings, Spec. for, 2
A 610–79 Ferroalloys for Determination of Size, Sampling and Testing, 2
A 611–72(1979) Steel, Cold-Rolled Sheet, Carbon, Structural, Spec. for, 3, 4
A 612–79b Pressure Vessel Plates, Carbon Steel, High Strength, for Moderate and Lower Temperature Service, Spec. for, 4
A 613–76 Steel Castings for Nuclear and Other Special Applications, Spec. for Special Requirements for, 1, 2, 45
A 614–79 Bolting Material for Nuclear and Other Special Applications, Spec. for Special Requirements for, 1, 45
A 615–79 Deformed and Plain Billet-Steel Bars for Concrete Reinforcement, Spec. for, 4
A 615M–79 Deformed and Plain Billet-Steel Bars for Concrete Reinforcement (Metric), Spec. for, 4
A 616–79 Rail-Steel Deformed and Plain Bars for Concrete Reinforcement, Spec. for, 4
A 617–79 Axle-Steel Deformed and Plain Bars for Concrete Reinforcement, Spec. for, 4
A 618–74 Hot-Formed Welded and Seamless High-Strength Low-Alloy Structural Tubing, Spec. for, 1, 4
A 619–75 Steel Sheet, Carbon, Cold-Rolled, Drawing Quality, Spec. for, 3
A 620–75 Steel Sheet, Carbon, Cold-Rolled, Drawing Quality, Special Killed, Spec. for, 3
A 621–75 Steel Sheet and Strip, Carbon, Hot-Rolled, Drawing Quality, Spec. for, 3
A 622–75 Steel Sheet and Strip, Carbon, Hot-Rolled, Drawing Quality, Special Killed, Spec. for, 3
A 623–78 Tin Mill Products, Spec. for General Requirements for, 3
A 623M–79 Tin Mill Products [Metric], Spec. for General Requirements for, 3
A 624–79 Tin Plate Single-Reduced Electrolytic, Spec. for, 3
A 624M–79 Tin Plate, Single-Reduced Electrolytic (Metric), Spec. for, 3
A 625–76 Single-Reduced Black Plate, Spec. for, 3
A 626–79 Tin Plate Double-Reduced Electrolytic, Spec. for, 3
A 626M–79 Tin Plate, Double-Reduced Electrolytic (Metric), Spec. for, 3
A 627–68(1973) Homogeneous Tool-Resisting Steel Bars for Security Applications, Spec. for, 5
A 628–74 Tool-Resisting Composite Steel Plates for Security Applications, Spec. for, 3
A 629–77 Tool-Resisting Steel Flat Bars and Shapes for Security Applications, Spec. for, 5
A 630–68(1974) Tin Coating Weights for Hot-Dip and Electrolytic Tin Plate, Determination of, 3
A 631–74 Cast Steel Wheels for Electrical Railway Service, Spec. for, 4
A 632–79 Seamless and Welded Austenitic Stainless Steel Tubing (Small-Diameter) for General Service, Spec. for, 1
A 633–79a Normalized High-Strength Low-Alloy Structural Steel, Spec. for, 4
A 634 Discontinued
A 635–74 Steel Sheet and Strip, Carbon, Hot-Rolled Commercial Quality, Heavy-Thickness Coils (Formerly Plate), Spec. for, 3

B. NONFERROUS METALS

1-70(1976) Hard-Drawn Copper Wire, Spec. for, **6**
2-70(1976) Medium-Hard-Drawn Copper Wire, Spec. for, **6**
3-74(1980) Soft or Annealed Copper Wire, Spec. for, **6**
4-79 Tough Pitch Lake Copper—Refinery Shapes, Spec. for, **6, 8**
5-80 Electrolytic Tough-Pitch Copper Refinery Shapes, Spec. for, **6, 8**
6-77 Zinc (Slab Zinc), Spec. for, **7, 8, 9**
7 Discontinued—Replaced by B 30
8-77 Concentric-Lay-Stranded Copper Conductors, Hard, Medium-Hard, or Soft, Spec. for, **6**
9-76 Bronze Trolley Wire, Spec. for, **6**
10 Discontinued
11-78 Copper Plates for Locomotive Fireboxes, Spec. for, **6**
12-76a Copper Rods for Locomotive Staybolts, Spec. for, **6**
13 Discontinued
14 Discontinued
15 Discontinued—Replaced by B 124
16-80 Free-Cutting Brass Rod, Bar, and Shapes for Use in Screw Machines, Spec. for, **6**
16M-80 Free-Cutting Brass Rod, Bar, and Shapes, for Use in Screw Machines (Metric), Spec. for, **6**
17 Discontinued—Replaced by B 66, B 67
18 Discontinued—Replaced by E 46, E 57
19-80 Cartridge Brass Sheet, Strip, Plate, Bar, and Disks, Spec. for, **6**
20 Discontinued—Combined with B 19
21-80 Naval Brass Rod, Bar, and Shapes, Spec. for, **6**
21M-80 Naval Brass, Rod, Bar, and Shapes (Metric), Spec. for, **6**
22-79 Bronze Castings for Bridges and Turntables, Spec. for, **6**
23-78 White Metal Bearing Alloys (Known Commercially as "Babbitt Metal"), Spec. for, **8**
24 Discontinued
25 Discontinued—Replaced by B 209
26-80 Aluminum-Alloy Sand Castings, Spec. for, **7**
27 Discontinued—Replaced by E 54
28 Discontinued—Replaced by E 54
29-79 Pig Lead, Spec. for, **8**
30-80 Copper-Base Alloys in Ingot Form, Spec. for, **6, 7**
31 Discontinued—Replaced by B 30
32-76 Solder Metal, Spec. for, **8**
33-74(1980) Tinned Soft or Annealed Copper Wire for Electrical Purposes, Spec. for, **6**
34 Redesignated E 53
35 Discontinued—Replaced by E 37
36-77 Brass Plate, Sheet, Strip, and Rolled Bar, Spec. for, **6**
37-60(1978) Aluminum for Use in Iron and Steel Manufacture, Spec. for, **7**
38 Discontinued—Replaced by E 40
39-79 Nickel, Spec. for, **8**
40 Discontinued—Replaced by E 34
41 Discontinued—Replaced by E 39
42-80 Seamless Copper Pipe, Standard Sizes, Spec. for, **6**
43-80 Seamless Red Brass Pipe, Standard Sizes, Spec. for, **6**
44 Discontinued—Replaced by B 111
45 Discontinued—Replaced by E 36, E 54
46 Discontinued—Replaced by E 54
47-64(1975) Copper Trolley Wire, Spec. for, **6**
48-68(1978) Soft Rectangular and Square Bare Copper Wire for Electrical Conductors, Spec. for, **6**
49-78 Hot-Rolled Copper Rods for Electrical Purposes, Spec. for, **6, 7**
50 Discontinued
51 Discontinued
52 Discontinued—Replaced by B 644
53 Discontinued—Replaced by B 644
54 Discontinued—Replaced by B 132, B 147
55 Discontinued
56 Discontinued—Replaced by B 111
57 Discontinued—Replaced by B 171
58 Discontinued—Replaced by B 179
59 Discontinued—Replaced by B 148
60 Discontinued—Replaced by B 143
61-80 Steam or Valve Bronze Castings, Spec. for, **6**
62-80 Composition Bronze or Ounce Metal Castings, Spec. for, **6**
63-49(1975) Resistivity of Metallically Conducting Resistance and Contact Materials, Test for, **44**
B 64 Discontinued—Replaced by B 260
B 65 Discontinued—Replaced by B 146
B 66-76 Bronze Castings in the Rough for Locomotive Wearing Parts, Spec. for, **6**
B 67-77 Car and Tender Journal Bearings, Lined, Spec. for, **6, 8**
B 68-80 Seamless Copper Tube, Bright Annealed, Spec. for, **6**
B 69-66(1979) Rolled Zinc, Spec. for, **8**
B 70-56(1975) Change of Resistance with Temperature of Metallic Materials for Electrical Heating, Test for, **44**
B 71 Dicontinued—Replaced by E 38
B 72 Discontinued
B 73 Discontinued—Replaced by B 260
B 74 Discontinued—Replaced by B 144
B 75-80 Seamless Copper Tube, Spec. for, **6**
B 76-65(1975) Accelerated Life Test of Nickel-Chromium and Nickel-Chromium-Iron Alloys for Electrical Heating, **44**
B 77-33(1975) Thermoelectric Power of Electrical-Resistance Alloys, Test for, **44**
B 78-65(1976) Accelerated Life Test of Iron-Chromium-Aluminum Alloys for Electrical Heating, **44**
B 79 Discontinued—Replaced by B 209
B 80-78 Magnesium-Alloy Sand Castings, Spec. for, **7**
B 81 Redesignated E 56
B 82 Discontinued—Replaced by B 344
B 83 Discontinued—Replaced by B 344
B 84-70(1975) Temperature-Resistance Constants of Alloy Wires for Precision Resistors, Test for, **44**
B 85-76 Aluminum-Alloy Die Castings, Spec. for, **7**
B 86-76 Zinc-Alloy Die Castings, Spec. for, **7**
B 87 Discontinued—Replaced by B 8
B 88-80 Seamless Copper Water Tube, Spec. for, **6**
B 89 Discontinued—Replaced by B 211
B 90-70(1975) Magnesium-Alloy Sheet and Plate, Spec. for, **7**
B 91-72(1978) Magnesium-Alloy Forgings, Spec. for, **7**
B 92-80 Magnesium Ingot and Stick for Remelting, Spec. for, **7**
B 93-76 Magnesium Alloys in Ingot Form for Sand Castings, Permanent Mold Castings, and Die Castings, Spec. for, **7**
B 94-77 Magnesium-Alloy Die Castings, Spec. for, **7**
B 95-39(1979) Linear Expansion of Metals, Test for, **10, 41**
B 96-80 Copper-Silicon Alloy Plate and Sheet for Pressure Vessels, Spec. for, **6**
B 97-80 Copper-Silicon Alloy Plate, Sheet, Strip, and Rolled Bar for General Purposes, Spec. for, **6**
B 98-80 Copper-Silicon Alloy Rod, Bar, and Shapes, Spec. for, **6**
B 99-80 Copper-Silicon Alloy Wire for General Purposes, Spec. for, **6**
B 100-80 Rolled Copper-Alloy Bearing and Expansion Plates and Sheets for Bridge and Other Structural Uses, Spec. for, **6**
B 101-78 Lead-Coated Copper Sheets, Spec. for, **6, 8**
B 102-76 Lead and Tin Alloy Die Castings, Spec. for, **7**
B 103-77 Phosphor Bronze Plate, Sheet, Strip, and Rolled Bar, Spec. for, **6**
B 104 Discontinued—Replaced by B 111
B 105-80 Hard-Drawn Copper Alloy Wires for Electric Conductors, Spec. for, **6**
B 106-78 Flexivity of Thermostat Metals, Test for, **44**
B 107-76 Magnesium-Alloy Extruded Bars, Rods, Shapes, Tubes, and Wire, Spec. for, **7**
B 108-80 Aluminum-Alloy Permanent Mold Castings, Spec. for, **7**
B 109 Discontinued—Replaced by B 209
B 110-45(1973) Dielectric Strength of Anodically Coated Aluminum, Test for, **7, 9**
B 111-80 Copper and Copper-Alloy Seamless Condenser Tubes and Ferrule Stock, Spec. for, **6**
B 112 Discontinued—Replaced by B 179
B 113 Redesignated F 113
B 114-45(1975) Temperature-Resistance Constants of Sheet Materials for Shunts and Precision Resistors, Test for, **44**
B 115-80 Electrolytic Cathode Copper, Spec. for, **6, 8**
B 116-64(1975) Figure-9 Deep-Section Grooved and Figure-8 Copper Trolley Wire for Industrial Haulage, Spec. for, **6**
B 117-73(1979) Salt Spray (Fog) Testing, **9, 10, 27**
B 118 Discontinued
B 119 Discontinued—Replaced by B 30, B 584
B 120 Discontinued—Replaced by B 194, B 196, B 197

B 121-77 Leaded Brass Plate, Sheet, Strip, and Rolled Bar, Spec. for, **6**
B 122-80 Copper-Nickel-Zinc Alloy (Nickel Silver) and Copper-Nickel Alloy Plate, Sheet, Strip, and Rolled Bar, Spec. for, **6**
B 123 Discontinued—Replaced by B 30
B 124-80 Copper and Copper Alloy Forging Rod, Bar, and Shapes, Spec. for, **6**
B 125 Discontinued—Replaced by B 179
B 126 Discontinued—Replaced by B 209
B 127-80 Nickel-Copper Alloy (UNS N04400) Plate, Sheet, and Strip, Spec. for, **8**
B 128 Redesignated F 128
B 129-80 Cartridge Brass Cartridge Case Cups, Spec. for, **6**
B 130-78 Commercial Bronze Strip for Bullet Jackets, Spec. for, **6**
B 131-79 Copper Alloy Bullet Jacket Cups, Spec. for, **6**
B 132 Discontinued—Replaced by B 584
B 133-79 Copper Rod, Bar, and Shapes, Spec. for, **6**
B 133M-80 Copper, Rod, Bar, and Shapes (Metric), Spec. for, **6**
B 134-78 Brass Wire, Spec. for, **6**
B 135-80 Seamless Brass Tube, Spec. for, **6**
B 136-77 Stain Resistance of Anodic Coatings on Aluminum, Measurement of, **7, 9**
B 137-45(1979) Weight of Coating on Anodically Coated Aluminum, Measurement of, **7, 9**
B 138-80 Manganese Bronze Rod, Bar, and Shapes, Spec. for, **6**
B 139-79 Phosphor Bronze Rod, Bar, and Shapes, Spec. for, **6**
B 139M-80 Phosphor Bronze Rod, Bar, and Shapes (Metric), Spec. for, **6**
B 140-80 Copper-Zinc-Lead (Leaded Red Brass or Hardware Bronze) Rod, Bar, and Shapes, Spec. for, **6**
B 140M-80 Copper-Zinc-Lead (Leaded Red Brass or Hardware Bronze) Rod, Bar, and Shapes (Metric), Spec. for, **6**
B 141 Discontinued—Replaced by B 456
B 142 Discontinued—Replaced by B 456
B 143 Discontinued—Replaced by B 584
B 144 Discontinued—Replaced by B 584
B 145 Discontinued—Replaced by B 584
B 146 Discontinued—Replaced by B 584
B 147 Discontinued—Replaced by B 584
B 148-78 Aluminum-Bronze Sand Castings, Spec. for, **6**
B 149 Discontinued—Replaced by B 584
B 150-80 Aluminum Bronze Rod, Bar, and Shapes, Spec. for, **6**
B 151-80 Copper-Nickel-Zinc Alloy (Nickel Silver) and Copper-Nickel Rod and Bar, Spec. for, **6**
B 152-79 Copper, Sheet, Strip, Plate, and Rolled Bar, Spec. for, **6**
B 153-79 Expansion (Pin Test) of Copper and Copper Alloy Pipe and Tubing, Test for, **6**
B 154-80 Mercurous Nitrate Test for Copper and Copper Alloys, **6**
B 155 Redesignated F 155
B 156 Discontinued—Replaced by F 219
B 157 Discontinued—Combined with F 9
B 158 Discontinued—Replaced by B 172, B 173, B 174
B 159-77 Phosphor Bronze Wire, Spec. for, **6**
B 160-75 Nickel Rod and Bar, Spec. for, **8**
B 161-75 Nickel Seamless Pipe and Tube, Spec. for, **8**
B 162-80 Nickel Plate, Sheet, and Strip, Spec. for, **8**
B 163-77 Seamless Nickel and Nickel Alloy Condenser and Heat-Exchanger Tubes, Spec. for, **8**
B 164-75 Nickel-Copper Alloy Rod and Bar, Spec. for, **8**
B 165-75 Nickel-Copper Alloy (UNS N04400) Seamless Pipe and Tube, Spec. for, **8**
B 166-75 Nickel-Chromium-Iron Alloy (UNS N06600) Rod and Bar, Spec. for, **8**
B 167-75 Nickel-Chromium-Iron Alloy (UNS N06600) Seamless Pipe and Tube, Spec. for, **8**
B 168-75 Nickel-Chromium-Iron Alloy (UNS N06600) Plate, Sheet, and Strip, Spec. for, **8**
B 169-80 Aluminum Bronze Plate, Sheet, Strip, and Rolled Bar, Spec. for, **6**
B 170-79 Oxygen-Free Electrolytic Copper—Refinery Shapes, Spec. for, **6, 8**
B 171-80 Copper-Alloy Condenser Tube Plates, Spec. for, **6**
B 172-71(1976) Rope-Lay-Stranded Copper Conductors Having Bunch-Stranded Members, for Electrical Conductors, Spec. for, **6**
B 173-71(1976) Rope-Lay-Stranded Copper Conductors Having Concentric-Stranded Members, for Electrical Conductors, Spec. for, **6**
B 174-71(1976) Bunch-Stranded Copper Conductors for Electrical Conductors, Spec. for, **6**
B 175 Discontinued—Combined with F 9
B 176-79 Copper Alloy Die Castings, Spec. for, **6, 7**
B 177-68(1978) Chromium Electroplating on Steel for Engineering Use, Rec. Practice for, **9**
B 178 Discontinued—Replaced by B 209
B 179-80 Aluminum Alloys in Ingot Form for Sand Castings, Permanent Mold Castings, and Die Castings, Spec. for, **7**
B 180 Redesignated F 180
B 181 Discontinued
B 182-49(1975) Life Test of Electrical Contact Materials, **44**
B 183-79 Low-Carbon Steel for Electroplating, Practice for Preparation of, **9**
B 184 Discontinued—Available from American Welding Society
B 185 Discontinued
B 186 Discontinued
B 187-80 Copper Bus Bar, Rod, and Shapes, Spec. for, **6**
B 188-80 Seamless Copper Bus Pipe and Tube, Spec. for, **6**
B 189-80 Lead-Coated and Lead-Alloy-Coated Soft Copper Wire for Electrical Purposes, Spec. for, **6**
B 190 Redesignated A 447
B 191 Discontinued—Replaced by B 305
B 192 Discontinued
B 193-78 Resistivity of Electrical Conductor Materials, Test for, **6, 7, 44**
B 194-77 Copper-Beryllium Alloy Plate, Sheet, Strip, and Rolled Bar, Spec. for, **6**
B 195 Discontinued—Combined with B 194
B 196-80 Copper-Beryllium Alloy Rod and Bar, Spec. for, **6**
B 197-80 Copper-Beryllium Alloy Wire, Spec. for, **6**
B 198 Discontinued—Replaced by B 584
B 199-72(1978) Magnesium-Alloy Permanent Mold Castings, Spec. for, **7**
B 200-76 Electrodeposited Coatings of Lead and Lead-Tin Alloys on Steel and Ferrous Alloys, Spec. for, **9**
B 201-68 Chromate Coatings on Zinc and Cadmium Surfaces, Rec. Practice for Testing, **9**
B 202 Discontinued—Replaced by B 438, B 439
B 203 Discontinued
B 204 Redesignated F 204
B 205 Redesignated F 205
B 206-78 Copper-Nickel-Zinc Alloy (Nickel Silver) Wire and Copper-Nickel Alloy Wire, Spec. for, **6**
B 207 Redesignated A 448
B 208-58(1975) Tension Test Specimens for Copper-Base Alloys for Sand Castings, Rec. Practice for Preparing, **6**
B 209-80 Aluminum-Alloy Sheet and Plate, Spec. for, **7**
B 209M-80 Aluminum-Alloy Sheet and Plate (Metric), Spec. for, **7**
B 210-79 Aluminum-Alloy Drawn Seamless Tubes, Spec. for, **7**
B 211-79a Aluminum-Alloy Bars, Rods, and Wire, Spec. for, **7**
B 211M-79 Aluminum-Alloy Bar, Rod, and Wire (Metric), Spec. for, **7**
B 212-76 Apparent Density of Free-Flowing Metal Powders, Test for, **9**
B 213-77 Flow Rate of Metal Powders, Test for, **9**
B 214-76 Sieve Analysis of Granular Metal Powders, Test for, **9**
B 215-60(1976) Finished Lots of Metal Powders, Sampling, **9**
B 216-78 Tough-Pitch Fire-Refined Copper for Wrought Products and Alloy—Refinery Shapes, Spec. for, **6, 8**
B 217 Discontinued—Combined with B 107
B 218 Redesignated F 218
B 219 Redesignated F 219
B 220 Discontinued—Combined with E 8
B 221-79a Aluminum-Alloy Extruded Bars, Rods, Wire, Shapes, and Tubes, Spec. for, **7**
B 221M-79 Aluminum-Alloy Extruded Bars, Rods, Wire, Shapes, and Tubes (Metric), Spec. for, **7**
B 222-70(1976) Sintered Iron-Copper Structural Parts, Spec. for, **9**
B 223-56(1978) Modulus of Elasticity of Thermostat Metals (Cantilever Beam Method), Test for, **44**
B 224-80 Coppers, Classification of, **6, 8**
B 225 Discontinued—Available from American Welding Society
B 226-71(1976) Cored, Annular, Concentric-Lay-Stranded Copper Conductors, Spec. for, **6**
B 227-70(1976) Hard-Drawn Copper-Clad Steel Wire, Spec. for, **3, 6**
B 228-71(1977) Concentric-Lay-Stranded Copper-Clad Steel Conductors, Spec. for, **3, 6**
B 229-71(1977) Concentric-Lay-Stranded Copper and Copper-Clad Steel Composite Conductors, Spec. for, **3, 6**
B 230-77 Aluminum 1350-H19 Wire, for Electrical Purposes, Spec. for, **7**
B 231-78 Concentric-Lay-Stranded Aluminum 1350 Conductors, Spec. for, **7**

N06002) Plate, Sheet, and Strip, Spec. for, 8
B 436 Discontinued
B 437-67(1973) Tension Testing of Cemented Carbides, 9
B 438-73 Copper-Base Sintered Bearings (Oil—Impregnated), Spec. for, 9
B 439-79 Iron-Base Sintered Bearings (Oil—Impregnated), Spec. for, 9
B 440-76 Cadmium Metal, Spec. for, 8, 9
B 441-80 Copper-Cobalt-Beryllium Rod and Bar, Spec. for, 6
B 442-80 Tough-Pitch Chemically Refined Copper—Refinery Shapes, Spec. for, 6, 8
B 443-75 Nickel-Chromium-Molybdenum-Columbium Alloy (UNS N06625) Plate, Sheet, and Strip, Spec. for, 8
B 444-75 Nickel-Chromium-Molybdenum-Columbium Alloy (UNS N06625) Seamless Pipe and Tube, Spec. for, 8
B 445-72 Nickel-Chromium-Iron-Columbium-Molybdenum-Tungsten Alloy (UNS N06102) Seamless Pipe and Tube, Spec. for, 8
B 446-75 Nickel-Chromium-Molybdenum-Columbium Alloy (UNS N06625) Rod and Bar, Spec. for, 8
B 447-80 Welded Copper Tube, Spec. for, 6
B 448 Discontinued—Available from American Welding Society
B 449-67(1972) Chromate Treatments on Aluminum, Rec. Practice for, 7, 9
B 450-79 Engineering Design of Electroformed Articles, Rec. Practice for, 9
B 451-80 Copper Foil, Strip, and Sheet for Printed Circuits and Carrier Types, Spec. for, 6, 43
B 452-67(1978) Copper-Clad Steel Wire for Electronic Application, Spec. for, 6
B 453-80 Copper-Zinc-Lead Alloy (Leaded Brass) Rod, Spec. for, 6
B 454-76 Mechanically Deposited Coatings of Cadmium and Zinc on Ferrous Metals, Spec. for, 4, 9
B 455-80 Copper-Zinc-Lead Alloy (Leaded Brass) Extruded Shapes, Spec. for, 6
B 456-79 Electrodeposited Coatings of Copper Plus Nickel Plus Chromium and Nickel Plus Chromium, Spec. for, 9
B 457-67(1972) Impedance of Anodic Coatings on Aluminum, Measurement of, 7, 9
B 458-70(1976) Sintered Nickel Silver Structural Parts, Spec. for, 9
B 459-67 Tungsten Base, High-Density Metal, Spec. for, 8, 9
B 460-68(1975) Dynamic Coefficient of Friction and Wear of Sintered Metal Friction Materials Under Dry Conditions, Test for, 9
B 461-67(1975) Frictional Characteristics of Sintered Metal Friction Materials Run in Lubricants, Test for, 9
B 462-79 Forged or Rolled Chromium-Nickel-Iron-Molybdenum-Copper-Columbium Stabilized Alloy (UNS N08020) Pipe Flanges, Forged Fittings, and Valves and Parts for Corrosive High-Temperature Service, Spec. for, 8
B 463-73 Chromium-Nickel-Iron-Molybdenum-Copper-Columbium Stabilized Alloy (UNS N08020) Plate, Sheet, and Strip, Spec. for, 8
B 464-73 Seamless and Welded Chromium-Nickel-Iron-Molybdenum-Copper-Columbium Stabilized Alloy (UNS N08020) Pipe, Spec. for, 8
B 465-79 Copper-Iron Alloy Plate, Sheet, Strip, and Rolled Bar, Spec. for, 6
B 466-80 Seamless Copper-Nickel Pipe and Tube, Spec. for, 6
B 467-80 Welded Copper-Nickel Pipe, Spec. for, 6
B 468-73 Seamless and Welded Chromium-Nickel-Iron-Molybdenum-Copper-Columbium Stabilized Alloy (UNS N08020) Tubes, Spec. for, 8
B 469-77 Seamless Copper Alloy Tubes for Pressure Applications, Spec. for, 6
B 470-68(1978) Bonded Copper Conductors for Use in Hookup Wire for Electronic Equipment, Spec. for, 6
B 471-79 Chromium-Nickel-Iron-Molybdenum-Copper-Columbium Stabilized Alloy (UNS N08020) Round Spring Wire, Spec. for, 8
B 472-79 Chromium-Nickel-Iron-Molybdenum-Copper-Columbium Stabilized Alloy (UNS N08020) Billets and Bars for Reforging, Spec. for, 8
B 473-79 Chromium-Nickel-Iron-Molybdenum-Copper-Columbium Stabilized Alloy (UNS N08020) Bar and Wire, Spec. for, 8
B 474-74 Electric Fusion Welded Chromium-Nickel-Iron-Molybdenum-Copper-Columbium Stabilized Alloy (UNS N08020) Pipe, Spec. for, 8
B 475-79 Chromium-Nickel-Iron-Molybdenum-Copper-Columbium Alloy (UNS N08020) Round Weaving Wire, Spec. for, 8
B 476-72(1978) Wrought Precious Metal Electrical Contact Materials, Spec. for General Requirements for, 44
B 477-77 Gold-Silver-Nickel Electrical Contact Alloy, Spec. for, 44
B 478-79 Cross Curvature of Thermostat Metals, Test for, 44
B 479-79 Annealed Aluminum Foil for Flexible Barrier Applications, Spec. for, 7, 21
B 480-68(1980) Magnesium and Magnesium Alloys for Electroplating, Rec. Practice for Preparation of, 9
B 481-68(1979) Titanium and Titanium Alloys for Electroplating, Rec. Practice for Preparation of, 9
B 482-68(1979) Tungsten and Tungsten Alloys for Electroplating, Rec. Practice for Preparation of, 9
B 483-78 Aluminum-Alloy Drawn Tubes for General Purpose Applications, Spec. for, 7
B 484-70(1976) Sintered Nickel Steel Structural Parts, Spec. for, 9
B 485-76 Diametral Compression Testing of Cemented Carbides, 9
B 486-74 Paste Solder, Spec. for, 8
B 487-79 Metal and Oxide Coating Thicknesses by Microscopical Examination of a Cross Section, Measurement of, 9
B 488-71 Electrodeposited Coatings of Gold for Engineering Uses, Spec. for, 9, 44
B 489-68(1979) Bend Test for Ductility of Electrodeposited and Autocatalytically Deposited Metal Coatings on Metals, Practice for, 9
B 490-68(1980) Micrometer Bend Test for Ductility of Electrodeposits, Rec. Practice for, 9
B 491-80 Aluminum-Alloy Extruded Round Tubes for General Purpose Applications, Spec. for, 7
B 492-78 Cast Copper-Nickel Ship Tailshaft Sleeves, Spec. for, 6
B 493-79 Zirconium and Zirconium Alloy Forgings, Spec. for, 8
B 494-79 Primary Zirconium, Spec. for, 8
B 495-79 Zirconium and Zirconium Alloy Ingots, Spec. for, 8
B 496-74a(1979) Compact Round Concentric-Lay-Stranded Copper Conductors, Spec. for, 6
B 497-79 Voltage Drop on Closed Arcing Contacts, Rec. Practice for Measuring, 44
B 498-74(1979) Zinc-Coated (Galvanized) Steel Core Wire for Aluminum Conductors, Steel Reinforced (ACSR), Spec. for, 3, 7
B 499-75(1980) Coating Thicknesses by the Magnetic Method: Nonmagnetic Coatings on Magnetic Basis Metals, Measurement of, 9
B 500-72(1977) Zinc-Coated (Galvanized) and Aluminum-Coated (Aluminized) Stranded Steel Core for Aluminum Conductors, Steel Reinforced (ACSR), Spec. for, 7
B 501-69(1979) Silver-Coated Copper-Clad Steel Wire for Electronic Application, Spec. for, 6
B 502-70(1976) Aluminum-Clad Steel Core Wire for Aluminum Conductors, Aluminum-Clad Steel Reinforced, Spec. for, 7
B 503-69(1978) Copper and Nickel Electroplating Solutions for Electroforming, Rec. Practice for Use of, 9
B 504-70(1976) Thickness of Metallic Coatings by the Coulometric Method, Measurement of, 9
B 505-79 Copper-Base Alloy Continuous Castings, Spec. for, 6
B 506-78 Copper-Clad Stainless Steel Sheet and Strip for Building Construction, Spec. for, 6
B 507-70(1979) Design of Articles to Be Electroplated on Racks with Nickel, Practice for, 9
B 508-78 Copper Alloy Strip for Flexible Metal Hose, Spec. for, 6
B 509-77 Nickel Alloy Plate for Nuclear Applications, Spec. for Supplementary Requirements for, 8, 45
B 510-77 Nickel Alloy Rod and Bar for Nuclear Applications, Spec. for Supplementary Requirements for, 8, 45
B 511-70(1975) Nickel-Iron-Chromium-Silicon Alloy (UNS N08330) Hot-Rolled and Cold-Finished Bars, Spec. for, 8
B 512-70(1975) Nickel-Iron-Chromium-Silicon Alloy (UNS N08330) Billets and Forging Bars, Spec. for, 8
B 513-79 Nickel Alloy Seamless Pipe and Tube for Nuclear Applications, Spec. for Supplementary Requirements for, 8, 45
B 514-79 Welded Nickel-Iron-Chromium Alloy Pipe, Spec. for, 8
B 515-79 Welded Nickel-Iron-Chromium Alloy (UNS N08800) Tubes, Spec. for, 8
B 516-79 Welded Nickel-Chromium-Iron Alloy Tubes, Spec. for, 8
B 517-79 Welded Nickel-Chromium-Iron-Alloy (UNS N06600) Pipe, Spec. for, 8
B 518-70(1975) Nickel-Chromium-Iron-Columbium-Molybdenum-Tungsten Alloy (UNS N06102) Rod and Bar, Spec. for, 8
B 519-70(1975) Nickel-Chromium-Iron-Columbium-Molybdenum-Tungsten Alloy (UNS N06102) Plate, Sheet, and Strip, Spec. for, 8
B 520-70(1976) Tin-Coated Copper-Clad Steel Wire for Electronic Applications, Spec. for, 6
B 521-74 Tantalum and Tantalum Alloy Tubing, Spec. for, 8, 45
B 522-75 Gold-Silver-Platinum Electrical Contact Alloy, Spec. for, 44
B 523-79 Seamless and Welded Zirconium and Zirconium Alloy Tubes for Condensers and Heat Exchangers, Spec. for, 8
B 524-78 Concentric-Lay-Stranded Aluminum Conductors, Aluminum Alloy Reinforced (ACAR, 1350/6201), Spec. for, 7
B 525-70(1976) Sintered Austenitic Stainless Steel Structural Parts, Spec. for, 9
B 526-70(1975) Coefficient of Friction and Wear of Sintered Metals Friction Materials Under Dry Clutch Conditions, Test for, 9
B 527-70(1976) Tap Density of Powders of Refractory Metals and Compounds by Tap-Pak Volumeter, Test for, 9
B 528-76 Transverse Rupture Strength of Sintered Metal Powder Specimens, Test for, 9
B 529 Discontinued—Replaced by B 244
B 530-75(1980) Coating Thicknesses by the Magnetic Method: Electrodeposited Nickel Coatings on Magnetic and Nonmagnetic Substrates, Measurement of, 9
B 531-78 Aluminum-Alloy 5005 Redraw Rod for Electrical Purposes, Spec. for, 7
B 532-79 Appearance of Electroplated Plastic Surfaces, Spec. for the, 9
B 533-79 Peel Strength of Metal Electroplated Plastics, Measurement of, 9
B 534-80 Copper-Cobalt-Beryllium Alloy (Copper Alloy UNS No. C17500) Plate, Sheet, Strip, and Rolled Bar, Spec. for, 6
B 535-75 Nickel-Iron-Chromium-Silicon Alloy (UNS N08330) Seamless and Welded Pipe, Spec. for, 8
B 536-70(1975) Nickel-Iron-Chromium-Silicon Alloy (UNS N08330) Plate, Sheet, and Strip, Spec. for, 8
B 537-70(1976) Rating of Electroplated Panels Subjected to Atmospheric Exposure, Rec. Practice for, 9
B 538-70(1979) FACT (Ford Anodized Aluminum Corrosion Test) Testing, 9
B 539-70(1975) Contact Resistance of Electrical Connections (Static Contacts), Measuring, 44
B 540-70(1975) Palladium Electrical Contact Alloy, Spec. for, 44
B 541-78 Gold Electrical Contact Alloy, Spec. for, 44
B 542-75 Electrical Contacts and Their Use, Def. of Terms Relating to, 44
B 543-80 Welded Copper and Copper—Alloy Heat Exchanger Tube, Spec. for, 6
B 544 Discontinued—Replaced by B 609
B 545-72 Electrodeposited Coatings of Tin, Spec. for, 9
B 546-74 Electric Fusion Welded Nickel-Iron-Chromium-Silicon Alloy (UNS N08330) Pipe, Spec. for, 8
B 547-78a Aluminum-Alloy Formed and Arc-Welded Round Tube, Spec. for, 7
B 548-76 Ultrasonic Inspection of Aluminum-Alloy Plate for Pressure Vessels, Method and Spec. for, 7
B 549-71(1977) Aluminum Conductors, Concentric-Lay-Stranded, Aluminum-Clad, Steel-Reinforced (ACSR/AW), Spec. for, 7
B 550-79 Zirconium and Zirconium Alloy Bar and Wire, Spec. for, 8
B 551-79 Zirconium and Zirconium Alloy Strip, Sheet, and Plate, Spec. for, 8
B 552-80 Seamless and Welded Copper-Nickel Tubes for Water Desalting Plants, Spec. for, 6
B 553-79 Thermal Cycling of Electroplated Plastics, Test for, 9
B 554-78 Thickness of Metallic Coatings on Nonmetallic Substrates, Rec. Practice for Measurement of, 9
B 555-75(1980) Electrodeposited Metallic Coating Thicknesses by the Dropping Test, Guidelines for Measurement of, 9
B 556-71 Thin Chromium Coatings by the Spot Test, Guidelines for Measurement of, 9
B 557-79 Tension Testing Wrought and Cast Aluminum- and Magnesium-Alloy Products, 7, 10
B 557M-79 Tension Testing Wrought and Cast Aluminum- and Magnesium-Alloy Products [Metric], 7, 10
B 558-79 Nickel Alloys for Electroplating, Practice for Preparation of, 9
B 559-72(1977) Nickel-Coated, Copper-Clad Steel Wire for Electronic Application, Spec. for, 6
B 560-79 Modern Pewter Alloys, Spec. for, 8
B 561-73(1979) Refined Platinum, Spec., for, 8
B 562-73(1979) Refined Gold, Spec. for, 8
B 563-72(1978) Palladium-Silver-Copper Electrical Contact Alloy, Spec. for, 44
B 564-77 Nickel Alloy Forgings, Spec. for, 8
B 565-76 Shear Testing of Aluminum and Aluminum-Alloy Rivets and Cold-Heading Wire and Rods, 7, 10
B 566-72(1977) Copper-Clad Aluminum Wire, Spec. for, 6, 7
B 567-79a Coating Thickness by the Beta Backscatter Method, Measurement of, 9
B 568-72(1978) Coating Thickness by X-Ray Spectrometry, Measurement of, 9
B 569-76a UNS No. C26000 Brass Strip in Narrow Widths and Light Gage for Heat-Exchanger Tubing, Spec. for, 6
B 570-79 Copper-Beryllium Alloy Forgings and Extrusions, Spec. for, 6
B 571-72 Adhesion of Metallic Coatings, Test for, 9
B 572-77 Nickel-Chromium-Molybdenum-Iron Alloy (UNS N06002) Rod, Spec. for, 8
B 573-77 Nickel-Molybdenum-Chromium-Iron Alloy (UNS N10003) Rod, Spec. for, 8
B 574-77 Low-Carbon Nickel-Molybdenum-Chromium Alloy Rod, Spec. for, 8
B 575-77 Low-Carbon Nickel-Molybdenum-Chromium Alloy Plate, Sheet, and Strip, Spec. for, 8
B 576-79 Arc Erosion Test for Electrical Contact Materials, Rec. Practice for Designing an, 44
B 577-76(1980) Hydrogen Embrittlement of Copper, Test for, 6
B 578-80 Microhardness of Electroplated Coatings, Measurement of, 9, 44
B 579-73 Electrodeposited Coatings of Tin-Lead Alloy (Solder Plate), Spec. for, 9
B 580-79 Anodic Oxide Coatings on Aluminum, Spec. for, 9
B 581-77 Nickel-Chromium-Iron-Molybdenum-Copper Alloy Rod, Spec. for, 8
B 582-77 Nickel-Chromium-Iron-Molybdenum-Copper Alloy Plate, Sheet, and Strip, Spec. for, 8
B 583-73 Porosity in Gold Coatings on Metal Substrates, Test for, 44
B 584-79 Copper Alloy Sand Castings for General Applications, Spec. for, 6
B 585-80 Seamless Copper-Alloy Water Tube, Spec. for, 6
B 586-80 Welded Copper-Alloy Water Tube, Spec. for, 6
B 587-80 Welded Brass Tube, Spec. for, 6
B 588-75 Thickness of Transparent or Opaque Coatings by Double-Beam Interference Microscope Technique, Measurement of, 9
B 589-77 Refined Palladium, Spec. for, 8
B 590 Discontinued
B 591-73(1980) Copper-Zinc-Tin Alloys Plate, Sheet, Strip, and Rolled Bar, Spec. for, 6
B 592-74 Copper-Zinc-Aluminum-Cobalt Alloy Plate, Sheet, Strip, and Rolled Bar, Spec. for, 6
B 593-73(1980) Bending Fatigue Tests for Copper-Alloy Spring Materials, Rec. Practice for Conducting, 6
B 594-74 Ultrasonic Inspection of Aluminum-Alloy Products for Aerospace Applications, 7
B 595-73(1979) Sintered Aluminum Structural Parts, Spec. for, 9
B 596 73(1978) Gold-Copper Alloy Electrical Contact Material, Spec. for, 44
B 597-76 Heat Treatment of Aluminum Alloys, Rec. Practice for, 7
B 598-74(1980) Offset Yield Strength for Copper Alloys, Rec. Practice for Determining, 6
B 599-74 Nickel-Iron-Chromium-Molybdenum-Columbium Stabilized Alloy (UNS NO8700) Plate, Sheet, and Strip, Spec. for, 8
B 600-74 Descaling and Cleaning Titanium and Titanium Alloy Surfaces, Rec. Practice for, 8, 45
B 601-74(1980) Temper Designations for Copper and Copper Alloys—Wrought and Cast, Rec. Practice for, 6
B 602-80 Inspection of Electrodeposited Metallic Coatings and Related Finishes, Sampling Procedures for, 9
B 603-77 Drawn or Rolled Iron-Chromium-Aluminum Alloys for Electrical Heating Elements, Spec. for, 44
B 604-75 Decorative Electroplated Coatings of Copper/Nickel/Chromium on Plastic, Spec. for, 9
B 605-75 Electrodeposited Coatings of Tin-Nickel Alloy, Spec. for, 9
B 606-79 High-Strength Zinc-Coated (Galvanized) Steel Core Wire for Aluminum and Aluminum Alloy Conductors Steel Reinforced, Spec. for, 3, 7
B 608-80 Welded Copper-Alloy Pipe, Spec. for, 6
B 609-78 Aluminum 1350 Round Wire, Annealed and Intermediate Tempers, for Electrical Purposes, Spec. for, 7
B 610-76 Dimensional Change of Metal Powder Specimens Due to Sintering, Measuring, 9
B 611-76 Abrasive Wear Resistance of Cemented Carbides,

Test for, 9
B 612–76 Iron Bronze Sintered Bearings (Oil-Impregnated), Spec. for, 9
B 613–76 Miniature Brushes of Composite Materials for Sliding Electric Contacts, Rec. Practice for Preparing Specifications for, 44
B 614–77 Descaling and Cleaning Zirconium and Zirconium Alloy Surfaces, Rec. Practice for, 8
B 615–79 Electrical Contact Noise in Sliding Electrical Contacts, Rec. Practice for Measuring, 44
B 616–78 Refined Rhodium, Spec. for, 8
B 617–77 Coin Silver Electrical Contact Alloy, Spec. for, 44
B 618–80 Aluminum-Alloy Investment Castings, Spec. for, 7
B 619–77 Welded Nickel Alloy Pipe, Spec. for, 8
B 620–77 Nickel-Iron-Chromium-Molybdenum Alloy (UNS N08320) Plate, Sheet, and Strip, Spec. for, 8
B 621–77 Nickel-Iron-Chromium-Molybdenum Alloy (UNS N08320) Rod, Spec. for, 8
B 622–77 Seamless Nickel Alloy Pipe and Tube, Spec. for, 8
B 623–80 Tough-Pitch Fire-Refined High-Conductivity Copper-Refinery Shapes, Spec. for, 6, 8
B 624–77 High-Strength, High-Ductility, Copper-Alloy Wire for Electronic Application, Spec. for, 6
B 625–77 Nickel-Iron-Chromium-Molybdenum-Copper Low-Carbon Alloy (UNS N08904) Plate, Sheet, and Strip, Spec. for, 8
B 626–77 Welded Nickel Alloy Tubes, Spec. for, 8
B 627–79 Electrolytic Corrosion Testing (EC Test), 9
B 628–77 Silver-Copper Eutectic Electrical Contact Alloy, Spec. for, 44
B 629–77 Preparation of Molybdenum and Molybdenum Alloys for Electroplating, Practice for, 9
B 630–77 Preparation of Chromium for Electroplating with Chromium, Practice for, 9
B 631–77 Silver-Tungsten Electrical Contact Materials, Spec. for, 44
B 632–79 Aluminum-Alloy Rolled Tread Plate, Spec. for, 7
B 633–78 Electrodeposited Coatings of Zinc of Iron and Steel, Spec. for, 9
B 634–78 Electrodeposited Coatings of Rhodium for Engineering Use, Spec. for, 9
B 635–78 Coatings of Cadmium-Tin Mechanically Deposited on Iron and Steel, Spec. for, 9
B 636–78 Internal Stress of Plated Metallic Coatings with the Spiral Contractometer, Measurement of, 9
B 638–80 Copper and Copper-Alloy Solar Heat Absorber Panels, Spec. for, 6
B 639–80 Precipitation Hardening Cobalt Containing Alloy Bars, Forgings, and Forging Stock for High-Temperature Service, Spec. for, 8, 5 (*Formerly A 639—Redesignated in 1980*)
B 640–78 Welded Copper and Copper Alloy Tube for Air Conditioning and Refrigeration Service, Spec. for, 6
B 641–78 Seamless and Welded Copper Distribution Tube (Type D), Spec. for, 6
B 642–78 Welded Copper Alloy No. C21000 Water Tube, Spec. for, 6
B 643–78 Copper-Beryllium Alloy Seamless Tube, Spec. for, 6
B 644–78 Copper Alloy Addition Agents, Spec. for, 6
B 645–78 Practice for Plane Strain Fracture Toughness Testing of Aluminum Alloys, 7
B 646–78 Practice for Fracture Toughness Testing of Aluminum Alloys, 7
B 647–78 Indentation of Hardness of Aluminum Alloys by Means of a Webster Hardness Gage, Test for, 7
B 648–78 Indentation Hardness of Aluminum Alloys by Means of a Barcol Impressor, Test for, 7
B 649–78 Nickel-Iron-Chromium-Molybdenum-Copper Low-Carbon Alloy (UNS N08904) Bar and Wire, Spec. for, 8
B 650–78 Electrodeposited Engineering Chromium Coatings on Ferrous Substrates, Spec. for, 9
B 651–78 Measurement of Corrosion Sites in Nickel Plus Chromium or Copper Plus Nickel Plus Chromium Electroplated Surfaces with the Double-Beam Interference Microscope, 9
B 652–79 Niobium-Hafnium Alloy Ingots, Spec. for, 8
B 653–79 Seamless and Welded Zirconium and Zirconium Alloy Welding Fittings, Spec. for, 8
B 654–79 Niobium-Hafnium Alloy Foil, Sheet, Strip, and Plate, Spec. for, 8
B 655–79 Niobium-Hafnium Alloy Bar, Rod, and Wire, Spec. for, 8
B 656–79 Autocatalytic Nickel Deposition on Metals for Engineering Use, Practice for, 9
B 657–79 Metallographic Determination of Microstructure in Cemented Carbides, 9
B 658–79 Seamless and Welded Zirconium and Zirconium Alloy Pipe, Spec. for, 8
B 659–79 Measuring Thickness of Electrodeposited and Related Coatings, Practice for, 9
B 660–79 Packaging/Packing of Aluminum and Magnesium Products, Practices for, 7
B 661–79 Heat Treatment of Magnesium Alloys, Practice for, 7
B 662–79 Silver-Molybdenum Electrical Contact Material, Spec. for, 44
B 663–79 Silver-Tungsten Carbide Electrical Contact Material, Spec. for, 44
B 664–79 80 % Silver-20 % Graphite Sliding Contact Material, Spec. for, 44
B 665–79 Metallographic Sample Preparation of Cemented Carbides, Practice for, 9
B 666–80 Identification Marking of Aluminum Products, Practice for, 7
B 670–78 Precipitation-Hardening Nickel Alloy (UNS N07718) Plate, Sheet, and Strip for High-Temperature Service, Spec. for, 3, 8

C. CEMENTITIOUS, CERAMIC, CONCRETE, AND MASONRY MATERIALS

C 1 Discontinued—Replaced by C 150
C 2 Discontinued—Replaced by E 119
C 3 Discontinued—Replaced by E 119
C 4–62(1975) Clay Drain Tile, Spec. for, 16
C 5–79 Quicklime for Structural Purposes, Spec. for, 13
C 6 Discontinued—Replaced by C 206
C 7 Discontinued
C 8 Discontinued
C 9 Discontinued—Replaced by C 150
C 10 Discontinued
C 11–80a Ceilings and Walls, Def. of Terms Relating to, 13
C 12–77 Installing Vitrified Clay Pipe Lines, Rec. Practice for, 16
C 13 Discontinued—Replaced by C 700
C 14–79 Concrete Sewer, Storm Drain, and Culvert Pipe, Spec. for, 16
C 15 Discontinued
C 16–77 Load Testing Refractory Brick at High Temperatures, 17
C 17 Discontinued
C 18 Discontinued—Replaced by C 571 to C 575
C 19 Redesignated E 119
C 20–80 Apparent Porosity, Water Absorption, Apparent Specific Gravity, and Bulk Density of Burned Refractory Brick and Shapes by Boiling Water, Tests for, 17
C 21 Discontinued—Replaced by C 62, C 67, C 73
C 22–77 Gypsum, Spec. for, 13
C 23 Discontinued
C 24–79 Pyrometric Cone Equivalent (PCE) of Refractory Materials, Test for, 17
C 25–79 Limestone, Quicklime, and Hydrated Lime, Chemical Analysis of, 13
C 26 Discontinued—Replaced by C 471, C 472, C 473
C 27–70(1976) Fireclay and High-Alumina Refractory Brick, Classification of, 17
C 28–80 Gypsum Plasters, Spec. for, 13
C 29–78 Unit Weight and Voids in Aggregate, Test for, 14, 15
C 30 Discontinued—Replaced by C 29
C 31–69(1975) Making and Curing Concrete Test Specimens in the Field, 14
C 32–73(1979) Sewer and Manhole Brick (Made from Clay or Shale), Spec. for, 16
C 33–80 Concrete Aggregates, Spec. for, 14
C 34–62(1975) Structural Clay Load-Bearing Wall Tile, Spec. for, 16
C 35–76 Inorganic Aggregates for Use in Gypsum Plaster, Spec. for, 13, 14
C 36–80 Gypsum Wallboard, Spec. for, 13
C 37–80 Gypsum Lath, Spec. for, 13
C 38–79 Panel Spalling Testing Refractory Brick, 17
C 39–72(1979) Compressive Strength of Cylindrical Concrete Specimens, Test for, 14
C 40–79 Organic Impurities in Fine Aggregates for Concrete, Test for, 14
C 41 Discontinued—Replaced by C 136
C 42–77 Drilled Cores and Sawed Beams of Concrete, Obtaining and Testing, 14
C 43–70(1975) Structural Clay Products, Def. of Terms Relating to, 16
C 44 Discontinued
C 45–25(1979) Quicklime and Hydrated Lime for Cooking of Rags in Paper Manufacture, Spec. for, 13
C 46–62(1979) Quicklime and Limestone for Sulfite Pulp Manufacture, Spec. for, 13
C 47 Discontinued
C 48 Discontinued
C 49–57(1979) Quicklime and Hydrated Lime for Silica Brick Manufacture, Spec. for, 13
C 50–78 Lime and Limestone Products, Sampling, Inspection, Packing, and Marking of, 13, 15
C 51–71(1976) Lime and Limestone (As Used by the Industry), Def. of Terms Relating to, 13
C 52–54(1977) Gypsum Partition Tile or Block, Spec. for, 13, 16
C 53–63(1976) Quicklime and Hydrated Lime for Water Treatment, Spec. for, 13
C 54 Discontinued—Combined with C 53
C 55–75 Concrete Building Brick, Spec. for, 16
C 56–71(1976) Structural Clay Non-Load-Bearing Tile, Spec. for, 16
C 57–57(1978) Structural Clay Floor Tile, Spec. for, 16
C 58 Discontinued
C 59–76 Gypsum Casting and Molding Plaster, Spec. for, 13
C 60 Discontinued
C 61–76 Gypsum Keene's Cement, Spec. for, 13
C 62–75a Building Brick (Solid Masonry Units Made from Clay or Shale), Spec. for, 16
C 63–61(1976) Fireclay Brick Refractories for Malleable Iron Furnaces with Removable Bungs, and for Annealing Ovens, Spec. for, 17
C 64–72(1977) Refractories for Incinerators and Boilers, Spec. for, 17
C 65 Discontinued
C 66 Discontinued—Replaced by C 35
C 67–78 Brick and Structural Clay Tile, Sampling and Testing, 16
C 68 Discontinued—Replaced by C 128
C 69 Discontinued
C 70–79 Surface Moisture in Fine Aggregate, Test for, 14
C 71–73(1978) Refractories, Def. of Terms Relating to, 17
C 72 Discontinued
C 73–75 Calcium Silicate Face Brick (Sand-Lime Brick), Spec. for, 16
C 74 Discontinued—Replaced by C 150
C 75 Discontinued—Combined with C 76
C 76–79 Reinforced Concrete Culvert, Storm Drain, and Sewer Pipe, Spec. for, 16
C 77 Discontinued—Replaced by C 183, C 184, C 187, C 188, C 190, C 191
C 78–75 Flexural Strength of Concrete (Using Simple Beam with Third-Point Loading), Test for, 14
C 79–78 Gypsum Sheathing Board, Spec. for, 13
C 80 Discontinued
C 81 Discontinued
C 82 Discontinued
C 83 Discontinued
C 84 Discontinued
C 85–66(1973) Cement Content of Hardened Portland Cement Concrete, Test for, 14
C 86 Discontinued—Replaced by C 127
C 87–69(1975) Effect of Organic Impurities in Fine Aggregate on Strength of Mortar, Test for, 14
C 88–76 Soundness of Aggregates by Use of Sodium Sulfate or Magnesium Sulfate, Test for, 14, 15
C 89 Discontinued—Replaced by C 88
C 90–78 Hollow Load-Bearing Concrete Masonry Units, Spec. for, 16
C 91–78 Masonry Cement, Spec. for, 13
C 92–76 Sieve Analysis and Water Content of Refractory Materials, Tests for, 17
C 93–67(1977) Cold Crushing Strength and Modulus of Rupture of Insulating Firebrick, Tests for, 17
C 94–80 Ready-Mixed Concrete, Spec. for, 14
C 95 Discontinued—Replaced by C 127, C 128
C 96 Discontinued—Replaced by C 127, C 128
C 97–47(1977) Absorption and Bulk Specific Gravity of Natural Building Stone, Tests for, 19
C 98 Discontinued—Replaced by C 170
C 99–52(1976) Modulus of Rupture of Natural Building Stone, Test for, 19
C 100 Discontinued
C 101 Discontinued
C 102 Discontinued
C 103 Discontinued
C 104 Discontinued
C 105–47(1976) Ground Fire Clay as a Refractory Mortar for Laying-Up Fireclay Brick, Spec. for, 17
C 106 Discontinued—Combined with C 64
C 107–76 Panel Spalling Testing High-Duty Fireclay Brick, 17
C 108–46(1977) Heat Transmission, Symbols for, 17
C 109–80 Compressive Strength of Hydraulic Cement Mortars (Using 2-in. or 50-mm Cube Specimens), Test for, 13
C 110–76a Quicklime, Hydrated Lime, and Limestone, Physical Testing of, 13
C 111 Discontinued
C 112 Discontinued—Combined with C 67
C 113–74(1979) Reheat Change of Refractory Brick, Test for, 17
C 114–80 Hydraulic Cement, Chemical Analysis of, 13
C 115–79b Fineness of Portland Cement by the Turbidimeter,

Partitions, Rec. Practice for, **18**
E 558–75 Torsion Testing of Wire, **10**
E 559 Discontinued
E 560–77 Reactor Vessel Surveillance Dosimetry Results, Rec. Practice for Extrapolating, **45**
E 561–80 *R*-Curve Determination, Rec. Practice for, **10**
E 562–76 Volume Fraction by Systematic Manual Point Count, Rec. Practice for Determining, **2, 11**
E 563–76 Freezing Point Reference Baths, Rec. Practice for Preparation and Use of, **44**
E 564–76 Static Load Test for Shear Resistance of Framed Walls for Buildings, **18**
E 565–76 Efficacy of a Single-Dose Rodenticide Under Laboratory Conditions, Test for, **46**
E 566–76 Electromagnetic (Eddy-Current) Sorting of Ferrous Metals, Rec. Practice for, **11**
E 567–76 Tertiary Hydroxyl Groups with Hydrogen Bromide, Test for, **30**
E 568 Discontinued—Replaced by E 372
E 569–76 Acoustic Emission Monitoring of Structures During Controlled Stimulation, Rec. Practice for, **11**
E 570–76 Flux Leakage Examination of Ferromagnetic Steel Tubular Products, Rec. Practice for, **11**
E 571–76 Electromagnetic (Eddy-Current) Examination of Nickel and Nickel Alloy Tubular Products, Rec. Practice for, **11**
E 572–76 X-Ray Emission Spectrometric Analysis of Stainless Steel, **42**
E 573–76 Internal Reflection Spectroscopy, Rec. Practices for, **42**
E 574–76 Duplex, Base Metal Thermocouple Wire with Glass Fiber or Silica Fiber Insulation, Spec. for, **44**
E 575–76 Reporting Data from Structural Tests of Building Constructions, Elements, Connections, and Assemblies, Rec. Practice for, **18**
E 576–79 Dew/Frost Point of Sealed Insulating Glass Units in Vertical Position, Test for, **18**
E 577–76 Dimensional Coordination of Rectilinear Building Parts and Systems, **18**
E 578–76 Linearity of Fluorescence Measuring Systems, Test for, **42**
E 579–76 Minimum Detectable Fluorescence of Quinine Sulfate and Cyclohexane, Test for, **42**
E 580–78 Application of Ceiling Suspension Systems for Acoustical Tile and Lay-in Panels in Areas Requiring Seismic Restraint, Rec. Practice for, **18**
E 581–76(1980) Manganese-Copper Alloys, Chemical Analysis of, **12**
E 582–76 Minimum Ignition Energy and Quenching Distance in Gaseous Mixtures, Test for, **41**
E 583–77 Systematizing the Development of (ASTM) Voluntary Consensus Standards for the Solution of Nuclear and Other Complex Problems, Rec. Practice for, **45**
E 584–77 Developing the (ASTM) Voluntary Consensus Standards Required to Help Implement the National Energy Plan, Rec. Guide for, **45**
E 585–76 Sheathed Base-Metal Thermocouple Material, Spec. for, **44**
E 586–76 Gamma and X-Radiography, Def. of Terms Relating to, **11**
E 587–76 Ultrasonic Angle-Beam Examination by the Contact Method, Rec. Practice for, **11**
E 588–76 Detection of Large Inclusions in Bearing Quality Steel by the Ultrasonic Method, Rec. Practice for, **11**
E 589–76 PA-14 Avian Stressing Agent, Guideline for Use and Develpment of, **46**
E 590–76 Sodium Monofluoroacetate (Compound 1080) as a Predacide, Guideline for Use and Development of, **46**
E 591–77 Safety and Health Requirements Relating to Occupational Exposure to Ozone, Practice for, **41**
E 592–77 Obtainable ASTM Equivalent Penetrameter Sensitivity for Radiography of Steel Plates ¼ to 2 in. (6 to 51 mm) Thick with X Rays and 1 to 6 in. (25 to 152 mm) Thick with Cobalt-60, Guide to, **11**
E 593–77 Efficacy of a Multiple-Dose Rodenticide Under Laboratory Conditions, Test for, **46**
E 594–77 Flame Ionization Detectors Used in Gas Chromatography, Rec. Practice for Testing, **42**
E 595–77 Total Mass Loss and Collected Volatile Condensable Materials from Outgassing in a Vacuum Environment, Test for, **41**
E 596–78 Noise Reduction of Sound-Isolating Enclosures, Laboratory Measurement of, **18**
E 597–77T Single-Number Rating of Airborne Sound Isolation in Multiunit Building Specifications, Rec. Practice for Determining, **18**
E 598–77 Extreme Heat-Transfer Rates from High-Energy Environments Using a Transient, Null-Point Calorimeter, Measuring, **41**
E 599–77 Efficacy of Slimicides for the Paper Industry—Fungal Slime, Test for, **46**
E 600–77 Efficacy of Slimicides for the Paper Industry—Bacterial Slime, Test for, **46**
E 601–77 EMF Stability of Single-Element Base-Metal Thermocouple Materials in Air, Test for Comparing, **44**
E 602–78T Sharp-Notch Tension Testing with Cylindrical Specimens, **7, 10**
E 603–77 Room Fire Experiments, Guide for, **18**
E 604–77 Dynamic Tear Energy of Metallic Materials, Test for, **10**
E 605–77 Thickness and Density of Sprayed Fire-Resistive Material Applied to Structural Members, Tests for, **18**
E 606–80 Constant-Amplitide Low-Cycle Fatigue Testing, Rec. Practice for, **10**
E 607–80 Aluminum and Aluminum Alloys by the Point-to-Plane Technique, Nitrogen Atmosphere, Optical Emission Spectrometric Analysis of, **42**
E 608–78 Metal-Sheathed Base-Metal Thermocouples, Spec. for, **44**
E 609–79a Pesticides, Def. of Terms Relating to, **46**
E 610–77 Acoustic Emission, Def. of Terms Relating to, **11**
E 611–77 Low Concentrations of Diethylene Glycol in Ethylene Glycol by Gas Chromatography, Test for, **30**
E 612–77 Field Evaluation of Nematode Control Agents—Site Selection Procedures, Guidelines for, **46**
E 613–77 Evaluation of Nematode Control Agents—Side Effects of Nematicide Application on Other Organisms, Guidelines for, **46**
E 614–77 Greenhouse or Growth Chamber Evaluation of Nematicies Against Root-Knot Nematode, Guidelines for, **46**
E 615–77 Sodium Cyanide as a Predacide, Guideline for Use and Development of, **46**
E 616–80 Fracture Testing, Terminology Relating to, **10**
E 617–78 Laboratory Weights and Precision Mass Standards, Spec. for, **41**
E 618–77T Evaluating Machining Performance Using an Automatic Screw/Bar Machine, **10**
E 619–77 Evaluating Foreign Odors in Paper Packaging, Practice for, **46**
E 620–77 Reporting Opinions of Technical Experts, Rec. Practice for, **41**
E 621–78 Use of Metric (SI) Units in Building Design and Construction, Practice for, **18**
E 622–77 Computerized Laboratory Systems, Generic Guidelines for, **42**
E 623–77 Developing Functional Requirements for Computerized Laboratory Systems, Guidelines for, **42**
E 624–77 Implementing Computerized Laboratory Systems, Guidelines for, **42**
E 625–79 Training Users of Computerized Laboratory Systems, Guidelines for, **42**
E 626–77 Evaluating Computerized Systems, Guidelines for, **42**
E 627–77 Documenting Computerized Laboratory Systems, Guidelines for, **42**
E 628–77 Field Evaluation of Nematode Control Agents—Test Materials and Environmental Conditions, Guidelines for, **46**
E 629–77 Field Evaluation of Nematode Control Agents—Determination of Nematode Population Responses to Control Agents, Guidelines for, **46**
E 630–77 Evaluation of Nematode Control Agents—Plant Responses, Guidelines for, **46**
E 631–80a Building Construction, Terminology Used in, **18**
E 632–78 Developing Short-Term Accelerated Tests for Prediction of the Service Life of Building Components and Materials, Rec. Practice for, **18**
E 634–78 Sampling of Zinc and Zinc Alloys for Optical Emission Spectrochemical Analysis, Practice for, **42**
E 637–78 Calculation of Stagnation Enthalpy from Heat Transfer Theory and Experimental Measurements of Stagnation-Point Heat Transfer and Pressure, **41**
E 638–78 Calibration of Heat Transfer Rate Calorimeters Using a Narrow-Angle Blackbody Radiation Facility, **41**
E 639–78 Total-Radiance Temperature of Heated Surfaces Using a Radiation Pyrometer, Measuring, **41**
E 640–78 Preservatives in Water-Containing Cosmetics, Test for, **46**
E 641–78 Agricultural Hydraulic Spray Nozzles, Testing, **46**
E 642–78 Application Rates and Distribution Patterns from Agricultural Aircraft, Practice for Determining, **46**
E 643–78 Conducting a Ball Punch Deformation Test of Metallic Sheet Material, **10**
E 644–78 Industrial Resistance Thermometers, Testing, **44**
E 645–78 Efficacy of Microbicides Used in Cooling Systems, Test for, **46**
E 646–78 Tensile Strain-Hardening Exponents (*n*-Values) of Metallic Sheet Materials, Test for, **10**
E 647–78T Constant-Load-Amplitude Fatigue Crack Growth Rates Above 10^{-8}m/Cycle, Test for, **10**
E 648–78 Critical Radiant Flux of Floor Covering Systems Using a Radiant Heat Energy Source, Test for, **18**
E 649–78 Bromine in Chlorine, Test for, **30**
E 650–78 Mounting Piezoelectric Acoustic Emission Contact Sensors, Practice for, **11**
E 651–78 Guidelines for Evaluating Capabilities of Agencies Involved in System Analysis and Compliance Assurance for Manufactured Building, **18**
E 652–78 Liquid Household Insecticides, Testing, **46**
E 653–78 Effectiveness of Aerosol and Pressurized Space Spray Insecticides Against Flying Insects, Testing, **46**
E 654–78 Effectiveness of Aerosol and Pressurized Spray Insecticides Against Cockroaches, Testing, **46**
E 655–78 Evaluation of Nematicides Against Root-Knot Nematode—Population Eradication Test, Guidelines for, **46**
E 656–78 Evaluation of Hatching Heterodera Schachtii Larvae, Guidelines for, **46**
E 657–78 Comparative Acute and Long-Term Oral or Gustatory Avian Repellency, Test for, **46**
E 658–78 Efficacy of Dog Repellents Designed to be Directly Applied to Garbage Bags, Test for, **46**
E 659–78 Autoignition Temperature of Liquid Chemicals, Test for, **41**
E 660–78 Accelerated Polishing of Aggregates or Pavement Surfaces Using a Small-Wheel Circular Track, Practice for, **15**
E 661–78 Performance of Wood and Wood-Based Floor and Roof Sheathing Under Concentrated Static and Impact Loads, Test for, **18**
E 662–79 Specific Optical Density of Smoke Generated by Solid Materials, Test for, **18**
E 663–78 Flame Atomic Absorption Analysis, Practice for, **42, 12**
E 664–78 Measurement of the Apparent Attenuation of Longitudinal Ultrasonic Waves by Immersion Method, Practice for the, **11**
E 665–78 Determining Absorbed Dose versus Depth in Materials Exposed to the X-Ray Output of Flash X-Ray Machines, Practice for, **45**
E 666–78 Calculation of Absorbed Dose from Gamma or X Radiation, Method for, **45**
E 667–79 Clinical Thermometers (Maximum Self-Registering, Mercury-in-Glass), Spec. for, **44**
E 668–78 Application of Thermoluminescence-Dosimetry (TLD) Systems for Determining Absorbed Dose in Radiation-Hardness Testing of Electronic Devices, Practice for, **45**
E 669–79 Master Matrix for Nuclear Fuel Cycle Standards, **45**
E 670–79 Side Force Friction on Paved Surfaces Using the Mu-Meter, Test for, **15**
E 671–79 Maximum Permissible Thermal Residual Stress in Annealed Glass Laboratory Apparatus, Spec. for, **41**
E 672–78 Disposable Glass Micropipets, Spec. for, **41**
E 673–79a Surface Analysis, Def. of Terms Relating to, **42**
E 674–79 Industrial Perforated Plate and Screens (Round Opening Series), Spec. for, **3, 41**
E 675–79 Interchangeable Stopcocks and Stoppers, Spec. for, **41**
E 676–79 Interchangeable Taper-Ground Joints, Spec. for, **41**
E 677–80 Interchangeable Spherical Ground Joints, Spec. for, **41**
E 678–80 Evaluation of Technical Data, Practice for, **41**
E 679–79 Determination of Odor and Taste Thresholds by a Forced Choice Ascending Concentration Series Method of Limits, Practice for, **46**
E 680–79 Drop Weight Impact Sensitivity of Solid-Phase Hazardous Materials, Test for, **41**
E 681–79 Limits of Flammability of Chemicals, Test for, **41**
E 682–79 Liquid Chromatography Terms and Relationships, Practice for, **42**
E 683–79 Installation and Service of Solar Space Heating Systems for One- and Two-Family Dwellings, Practice for, **41**
E 684–79 Approximate Determination of the Current Density of Large-Diameter Ion Beams for Depth Profiling of Solid Surfaces, Practice for, **42**
E 685–79 Fixed-Wavelength Photometric Detectors Used in Liquid Chromatography, Practice for Testing, **42**
E 686–80 Evaluation of Antimicrobial Agents in Aqueous Metal Working Fluids, **46**
E 687–79 Sensory Evaluation Procedure to Establish Guidelines for Open Dating Food and Beverage Products, Practice for, **46**
E 688–79 Waste Glass as a Raw Material for Manufacture of Glass Containers, Testing, **41**
E 689–79 Reference Radiographs for Ductile Iron Castings, **11**
E 690–79 In-Situ Electromagnetic (Eddy Current) Examination of Nonmagnetic Heat Exchanger Tubes, Practice for, **11**
E 691–79 Conducting an Interlaboratory Test Program to Determine the Precision of Test Methods, Practice for, **41**
E 692–79 High-Resolution Gamma-Ray Spectral Analysis for Cesium-137 in Irradiated Nuclear Fuels, **45**
E 693–79 Characterizing Neutron Exposures in Ferritic Steels in Terms of Displacements Per Atom (DPA), Practice for, **45**
E 694–79 Volumetric Ware, Spec. for, **41**
E 695–79 Relative Resistance of Wall, Floor, and Roof Constructions to Impact Loading, Measuring, **18**
E 696–79 Thermocouple Wire, 97 % Tungsten—3 % Rhenium and 75 % Tungsten—25 % Rhenium, Spec. for, **44**
E 697–79 Use of Electron-Capture Detectors Used in Gas Chromatography, Practice for, **42**
E 698–79 Arrhenius Kinetic Constants for Thermally Unstable Materials, Test for, **41**
E 699–79 Criteria for Evaluation of Agencies Involved in Testing, Quality Assurance, and Evaluating Building Components in Accordance with Test Methods Promulgated by ASTM Committee E-6, Practice for, **18**
E 700–79 Water in Gases Using Karl Fischer Reagent, Test for, **30**
E 701–80 Municipal Ferrous Scrap, Testing, **41**
E 702–79 Municipal Ferrous Scrap, Spec. for, **41**
E 703–79 Electromagnetic (Eddy Current) Sorting of Nonferrous Metals, Practice for, **11**
E 704–79 Fast-Neutron Flux Density by Radioactivation of Uranium-238, Determining, **45**
E 705–79 Fast-Neutron Flux Density by Radioactivation of Neptunium-237, Determining, **45**
E 706–79 Irradiation Surveillance Dosimetry of Pressure Vessels of Light-Water Reactors, Master Matrix of Procedures for, **45**
E 707–79 Skid Resistance of Paved Surfaces Using the North Carolina State University Variable-Speed Friction Tester, Test for, **15**
E 708–79 Waste Glass as a Raw Material for the Manufacture of Glass Containers, Spec. for, **41**
E 709–80 Magnetic Particle Examination, Practice for, **11**
E 712–80 Laboratory Screening of Metallic Containment Materials for Use with Liquids in Solar Heating and Cooling Systems, Guide for, **41**
E 713–80 Scales for Metric Building Drawings, **18**
E 714–80 Disposable Glass Serological Pipets, Spec. for, **41**
E 715–80 Gravity-Convection and Forced-Circulation Water Baths, Spec. for, **41**
E 716–80 Sampling of Aluminum and Its Alloys for Spectrochemical Analysis, Practices for, **42**
E 717–80 Preparation of the Accreditation Section of Acoustical Test Standards, Guide for, **18**
E 718–80 Cartridge Brass, Spectrographic Analysis of, **42**
E 719–80 Indentation of Building Materials Surfaces Under Concentrated Loads as a Measure of Serviceability, Test for, **18**
E 720–80 Selection of a Set of Neutron-Activation Foils for Determining Neutron Spectra Used in Radiation-Hardness Testing of Electronics, Guide for, **45**
E 722–80 Characterizing Neutron Energy Fluence Spectra in Terms of an Equivalent Monoenergetic Neutron Fluence for Radiation-Hardness Testing of Electronics, Practice for, **45**
E 723–80 Efficacy of Antimicrobials as Preservatives for Aqueous-Based Products Used in the Paper Industry (Bacterial Spoilage), Test for, **46**
E 724–80 Conducting Static Basic Acute Toxicity Tests with Larvae of Four Species of Bivalve Molluscs, Practice for, **46**
E 725–80 Granular Carriers and Granular Pesticides, Sampling, **46**
E 726–80 Particle Size Distribution of Granular Carriers or Granular Pesticides, Test for, **46**
E 727–80 Free-Fall Bulk Density, Test for, **46**
E 728–80 Resistance to Attrition of Granular Carriers and Granular Pesticides, Test for, **46**
E 729–80 Conducting Acute Toxicity Tests with Fishes, Macroinvertebrates, and Amphibians, Practice for, **46**
E 730–80 Developing Functional Designs for Computerized Systems, Guide for, **42**
E 731–80 Procurement of Commercially Available Computerized Systems, Guide for, **42**
E 732–80 Disposable Pasteur-Type Pipet, Spec. for, **41**
E 733–80 44.7-µL Disposable Glass Micropipets, Spec. for, **41**
E 734–80 Disposable Glass Blood Sample Capillary Tube (Microhematocrit), Spec. for, **41**
E 737–80 Installation of Storm Windows, Replacement

F 512–79 Smooth-Wall Poly(Vinyl Chloride) (PVC) Conduit and Fittings for Underground Installation, Spec. for, **34**
F 513–77 Eye and Face Protective Equipment for Hockey Players, Spec. for, **46**
F 515–80 Polished Monocrystalline Silicon Slices, Spec. for, **43**
F 516–77 Force and Moment Properties of Passenger Car Tires, Laboratory Test for, **38**
F 517–77 Aligning a Visible Beam from a Continuous-Wave Laser at a Desired Distance from a Reference Surface, Rec. Practice for, **43**
F 518–77 Effective Adhesion of Photoresist to Hard-Surface Photomask Blanks and Semiconductor Wafers During Etching, Rec. Practice for Determining the, **43**
F 519–78 Electronic Hydrogen Embrittlement Test for Cadmium Electroplating Processes, **25**
F 520–77 Environmental Resistance of Aerospace Transparencies, Test for, **25**
F 521–77 Bond Integrity of Transparent Laminates, Tests for, **25**
F 522–78 Stacking Fault Density of Epitaxial Layers of Silicon by Interference-Contrast Microscopy, Test for, **43**
F 523–80 Unaided Visual Inspection of Polished Silicon Slices, Practice for, **43**
F 524–77T Beam Divergence of Pulsed Lasers by the Apertured-Detector Technique, Measuring, **43**
F 525–77T Resistivity of Silicon Wafers Using a Spreading Resistance Probe, Measuring, **43**
F 526–77T Dose Measurement for Use in Linear Accelerator Pulsed Radiation Effects Tests, **43**
F 527–80 Photoresist Exposure Time, Rec. Practice for Adjusting, **43**
F 528–77T Common-Emitter D-C Current Gain of Junction Transistors, Measurement of, **43**
F 529–80 Interferograms of Nominally Plane Wavefronts, Interpretation of, **43**
F 530–77T Wavefront Distortion of Laser Rods, Test for, **43**
F 531–77T Wavefront Distortion and Face Parallelism of Laser Disks, Tests for, **43**
F 532–77T Width of Defects in Optical Surfaces, Using Nomarski Differential Microscopy, Measuring, **43**
F 533–79 Thickness and Thickness Variation of Silicon Slices, Test for, **43**
F 534–78 Bow of Silicon Slices, Test for, **43**
F 535–79 Electrical Performance Characteristics of Vacuum Cleaners, Spec. for, **46**
F 536–77 Size of Resilient Floor Tile by Dial Gage Method, Test for, **46**
F 537–78 Design, Fabrication, and Installation of Fences Constructed of Wood and Related Materials, Spec. for, **3**
F 538–79a Tires, Def. of Terms Relating to, **38**
F 539–78 Fitting of Athletic Footwear, Practice for, **46**
F 540–79 Squareness of Resilient Floor Tile by a Dial Gage, Test for, **46**
F 541–79 Alloy Steel Eyebolts, Spec. for, **4**
F 542–80 Exothermic Temperature of Encapsulating Compounds for Electronic and Microelectronic Encapsulation, Test for, **43**
F 543–77 Cortical Bone Screws, Spec. for, **46**
F 544–77 Reference Chart for Pictorial Bone Screw Classification, **46**
F 545–77 PVC and ABS Injected Solvent Cemented Plastic Pipe Joints, Spec. for, **34**
F 546–77 Perfluoro (Ethylene-Propylene) Copolymer (FEP) Plastic-Lined Ferrous Metal Pipe and Fittings, Spec. for, **34**
F 547–77 Nails for Use with Wood and Wood-Base Materials, Def. of Terms Relating to, **4, 22**
F 549–78a Carbonless Copy Products, Def. of Terms Relating to, **20**
F 550–77 Lithographic Properties of Imaging Materials, Test for, **20**
F 551–77 Using a Nominal 67.2-in. (1.707-m) Diameter Laboratory Test Roadwheel in Testing Passenger Car Tires, Practice for, **38**
F 552–78 Chain Link Fencing, Def. of Terms Relating to, **3**
F 553–79 Carbon Paper Durability, Test for, **20**
F 554–78 Wet Cornering Traction of Tires Using Over-the-Road Tire Tester, Test for, **38**
F 555–78 Service-Free Life Evaluation of Household Vacuum Cleaners, **46**
F 556–78 Curl of Carbonless Copy Papers, Test for, **20**
F 557–79 "Relative Work" for Straight-Line Movement of Cleaners While Cleaning Carpets, Test for, **46**
F 558–78 Air Performance Characteristics of Vacuum Cleaners, Measuring, **46**
F 559–78 Measuring Length of Road Test Courses Using a Fifth Wheel, **38**
F 560–78 Unalloyed Tantalum for Surgical Implant Applications, Spec. for, **46**
F 561–78 Retrieval and Analysis of Metabllic Orthopedic Implants, Practice for, **46**
F 562–78 Wrought Cobalt-Nickel-Chromium-Molybdenum Alloy for Surgical Implant Applications, Spec. for, **46**
F 563–78 Wrought Cobalt-Nickel-Chromium-Molybdenum-Tungsten-Iron Alloy for Surgical Implant Applications, Spec. for, **46**
F 564–78 Bone Staples, Spec. for, **46**
F 565–78 Care and Handling of Orthopedic Implants and Instruments, Practice for, **46**
F 567–78 Installation of Chain-Link Fence, Practice for, **3**
F 568–79 Carbon and Alloy Steel Externally Threaded Metric Fasteners, Spec. for, **4**
F 569–78 Filterability Index of Reagent-Grade Water and High-Purity Waters for Microelectronic Device Processing, Test for, **43**
F 570–80 Transistor Collector-Emitter Saturation Voltage, Tests for, **43**
F 571–79 Installation of Exit Devices in Security Areas, Practice for, **46**
F 572–78 Application of Photographic Security Cameras in Financial Institutions, Practice for, **46**
F 573–78 Residential Zinc-Coated Steel Chain-Link Fence Fabric, Spec. for, **3**
F 574–78 Evaluation of Polysilicon, Test for, **43**
F 575–78 Particle Concentration in Liquids, Classification for, **43**
F 576–78 Insulator Thickness and Refractive Index on Silicon Substrates by Ellipsometry, Measurement of, **43**
F 577–78 Particle Size Measurement of Dry Toners, Test for, **20**
F 578–78 Lasing Threshold and Slope Efficiency of Neodymium-Doped Laser Rods, Test for, **43**
F 579–80 Face Flatness by Optical Non-Contact Technique, Test for, **43**
F 580–78 Adhesion Strength of Bondable Films to Substrates in Ribbon-Wire Bonds, Test for, **43**
F 581–78 Accelerated Aging of Photoresist, Practice for, **43**
F 582–78 Preparation of Photoresist for Analysis of Inorganic Contaminants, Practice for, **43**
F 583–78 Photoresist Cleanness-Filterability, Test for, **43**
F 584–78 Visual Inspection of Semiconductor Lead Bonding Wire, Practice for, **43**
F 585–78 Insertion of Flexible Pollyethylene Pipe into Existing Sewers, Practice for, **34**
F 586–79 Leak Rates Versus "y" Stresses and "m" Factors for Gaskets, Test for **38**
F 587–78 Sampling Ground Meat in Blenders, Practice for, **46**
F 588–79 Resistance of Window Assemblies to Forced Entry, Tests for, **46**
F 589–78 Non-Powder Guns, Consumer Safety Spec. for, **46**
F 590–78 Non-Powder Gun Projectiles and Propellants, Consumer Safety Spec. for, **46**
F 591–78 Using the Computer Impact Print-Out Unit as a Test Instrument, Practice for, **20**
F 592–78 Collated and Cohered Fasteners and Their Application Tools, Def. of Terms Relating to, **4**
F 593–78 Stainless Steel Bolts, Hex Cap Screws, and Studs, Spec. for, **4**
F 594–78 Stainless Steel Nuts, Spec. for, **4**
F 595–78 Vacuum Cleaner Hose for Durability and Reliability (All-Plastic Hose), Testing, **46**
F 596–78 Comparative Evaluation of the Imaging Properties of Dry Electrostatic Toners, Practice for, **20**
F 597–78 Evaluation of One-Time carbon Paper in Carbon Interleaved Business Forms by Use of an Electric Typewriter, Practice for, **20**
F 598–78 Resistance of Carbonless Papers to Capsular Damage, Practice for Determining the, **20**
F 599–78 Poly(Vinylidene Chloride) (PVDC) Plastic-Lined Ferrous Metal Pipe and Fittings, Spec. for, **34**
F 600–78 Nondestructive Ultrasonic Evaluation of Socket and Butt Joints on Thermoplastic Piping, Practice for, **34**
F 601–78 Fluorescent Penetrant Inspection of Metallic Surgical Implants, Practice for, **46**
F 602–78 Description for Implantable Thermoset Epoxy Plastics, **46**
F 603–78 High-Purity Dense Aluminum Oxide for Surgical Implant Application, Spec. for, **46**
F 604–78 Silicone Elastomers Used in Medical Applications, Classification for, **46**
F 605–78 Determining the Compatibility of One-Time Carbon Paper with Carbonless Copy Papers When Interleaved into the Same Form, Practice for, **20**
F 606–79a Conducting Tests to Determine the Mechanical Properties of Externally and Internally Threaded Fasteners, Washers, and Rivets, **4**
F 607–79 Adhesion of Gasket Materials to Metal Surfaces, Test for, **38**
F 608–79 Laboratory Method for Evaluation of Carpet-Embedded Dirt Removal Effectiveness of Household Vacuum Cleaners, **46**
F 609–79 Static Slip Resistance of Footwear, Sole, Heel, or Related Materials by Horizontal Pull Slipmeter (HPS), Test for, **46**
F 610–79 Estimating the Quality of Molded Poly (Vinyl Chloride) (PVC) Plastic Pipe Fittings by the Heat Reversion Technique, Practice for, **34**
F 611–79 Wavefront Distortion of Nominally Plane Optical Elements Due to Refractive Index Inhomogeneity, Test for, **43**
F 612–80 Cleaning Surfaces of Polished Silicon Slices, Practice for, **43**
F 613–79 Measuring Diameter of Silicon Slices and Wafers, **43**
F 614–80 Distortion of Optical Lenses Used in Photomask Fabrication, Test for, **43**
F 615–79 Determining Safe Current Pulse Operating Regions for Metallization on Semiconductor Components, Practice for, **43**
F 616–80 Measuring MOSFET Drain Leakage Current, **43**
F 617–79 Measuring MOSFET Linear Threshold Voltage, **43**
F 618–79 Measuring MOSFET Saturated Threshold Voltage, **43**
F 619–79 Extraction of Medical Plastics, Practice for, **46**
F 620–79 Titanium 6Al-4V ELI Alloy Forgings for Surgical Implants, Spec. for, **46**
F 621–79 Stainless Steel Forgings for Surgical Implants, Spec. for, **46**
F 622–79 Preformed Cranioplasty Plates That Can Be Altered, Spec. for, **46**
F 625–79 Environmental Conditions Relevant to Spill Control Systems for Use on Water, Description of, **46**
F 626–79 Fence Fittings, Spec. for, **3**
F 627–79 Testing Flake of Film Typewriter Ribbons, Practice for, **20**
F 628–79 Acrylonitrile-Butadiene-Styrene (ABS) Plastic Drain, Waste, and Vent Pipe Having a Foam Core, Spec. for, **34**
F 629–79 Radiography of Cast Metallic Surgical Implants, Practice for, **46**
F 630–80 Safety Consideration for Household Vacuum Cleaners, Spec. for, **46**
F 631–80 Full-Scale Advancing Spill Removal Devices, Testing, **46**
F 632–79 Small-Signal Common Emitter Current Gain of Transistors at High Frequencies, Measurement of, **43**
F 633–79 Use of the High-Speed Printer as a Test Instrument for Carbon Paper, Practice for, **20**
F 634–79 Measurement of the Coating Transfer Resistance of Mechanical Carbonless CB Paper, Practice for, **20**
F 635–80 Selection of Tests for Material Properties of Liquid Thermoset Encapsulating Compounds for Electronic and Microelectronic Encapsulation, Guide for, **43**
F 636–80 Selection of Tests for Material Properties of Transfer Molding Compounds for Electronic and Microelectronic Encapsulation, Guide for, **43**
F 637–79 Format of 19 and 35-mm Wide Testable Tape Carrier for Tape Carrier-Bonded Semiconductor Devices, Spec. for, **43**
F 638–79 Fine Aluminum-1 % Magnesium Wire for Semiconductor Lead-Bonding, Spec. for, **43**
F 639–79 Polyethylene Plastics for Medical Applications, Spec. for, **46**
F 640–79 Radiopacity of Plastics for Medical Use, Tests for, **46**
F 641–79 Implantable Epoxy Electronic Encapsulants, Spec. for, **46**
F 642–79 Stainless Steel Flexible Wire for Surgical Fixation for Soft Tissue, Spec. for, **46**
F 643–79 Wrought Cobalt-Chromium Alloy Flexible Wire for Surgical Fixations for Soft Tissue, Spec. for, **46**
F 644–79 Wrought Cobalt-Chromium Alloy Flexible Wire for Surgical Fixations for Bone, Spec. for, **46**
F 647–79 Evaluation and Specifying Implantable Shunt Assemblies for Neurosurgical Application, Practice for, **46**
F 648–80 Ultra-High-Molecular-Weight Polyethylene Powder and Fabricated Form for Surgical Implants, Spec. for, **46**
F 649–80 Secondary Calibration of Airborne Particle Counter Using Comparison Procedures, Practice for, **25**
F 650–80 Determining Relative Bias of Two Particle Counters Using Comparison Procedures, Practice for, **25**
F 651–80 Particle Counter Single-Point Calibration by the Median Method, **25**
F 652–68(1978) Mica Stampings or Substitutes Used in Electron Devices and Lamps, Measuring, **43**
F 655–80 Test Carpets and Pads for Vacuum Cleaner Testing, Spec. for, **46**
F 657–80 Measuring Warp and Total Thickness Variation on Silicon Slices and Wafers by a Noncontact Scanning Method, **43**
F 658–80 Defining, Counting, and Sizing Accuracy of a Liquid Borne Particle Using Wear-Monodisperse Spherical Particulate Materials, Practice for, **25**
F 659–80 Eye Protective Devices, Spec. for, **46**
F 661–80 Particle Count and Size Distribution Measurement in Batch Samples Using an Optical Particle Counter, Practice for, **46**
F 662–80 Particle Count and Size Distribution in Batch Samples for Filter Evaluation Using an Electrical Resistance Particle Counter, Measurement of, **46**
F 663–80 Manual Analysis of Interferometric Data by Least-Squares Fitting to a Plane Reference Surface, Practice for, **43**
F 664–80 Manual Analysis of Interferometric Data by Least-Squares Fitting to a Spherical Reference Surface and for Computer-Aided Analysis of Interferon Metric Data by Least-Squares Fitting to Both Plane and Spherical Reference Surfaces, Practice for, **43**
F 665–80 Vinyl Chloride Plastics Used in Biomedical Application, Classification for, **46**
F 666–80 Stainless Steel Flexible Wire for Surgical Fixation for Bone, Spec. for, **46**
F 671–80 Measuring Fiducial Flat Length and Deviation, **43**
F 672–80 Measuring Resistivity Profile Perpendicular to the Surface of a Silicon Wafer Using a Spreading Resistance Probe, **43**
F 673–80 Measuring Resistivity of Semiconductor Slices with a Noncontact Eddy-Current Gage, **43**
F 674–80 Preparing High-Resistivity *n*-Type Silicon for Spreading Resistance Measurements, Practice for, **43**
F 675–80 Measuring Nonequilibrium Transient Photocurrents from *p-n* functions, **43**
F 676–80 Measuring Unsaturated TTL Sink Current, **43**
F 677–80 Fluid and Grease Resistance of Thermoset Encapsulating Compounds Used in Electronic and Microelectronic Applications, Test for, **43**

EXHIBIT 9

1981 Annual Book of ASTM Standards

Index

C 341–79 Length Change of Drilled or Sawed Specimens of Cement Mortar and Concrete, Test for, **14**
C 342–79 Potential Volume Change of Cement-Aggregate Combinations, Test for, **14**
C 343 Discontinued—Replaced by C 552
C 344 Discontinued—Replaced by C 533
C 345 Discontinued—Replaced by C 533
C 346–76 45-deg Specular Gloss of Ceramic Materials, Test for, **17**
C 347–57(1978) Reflectivity and Coefficient of Scatter of White Porcelain Enamels, Test for, **17**
C 348–80 Flexural Strength of Hydraulic Cement Mortars, Test for, **13**
C 349–77 Compressive Strength of Hydraulic Cement Mortars (Using Portions of Prisms Broken in Flexure), Test for, **13**
C 350 Discontinued—Replaced by C 618
C 351–61(1973) Mean Specific Heat of Thermal Insulation, Test for, **18**
C 352 Discontinued—Replaced by C 640
C 353–80 Adhesion of Dried Thermal Insulating or Finishing Cement, Test for, **18**
C 354–80 Compressive Strength of Thermal Insulating or Finishing Cement, Test for, **18**
C 355–64(1973) Water Vapor Transmission of Thick Materials, Tests for, **18**
C 356–60(1980) Linear Shrinkage of Preformed High-Temperature Thermal Insulation Subjected to Soaking Heat, Test for, **18**
C 357–70(1976) Bulk Density of Granular Refractory Materials, Test for, **17**
C 358 Discontinued—Replaced by C 595
C 359–75 Early Stiffening of Portland Cement (Mortar Method), Test for, **13**
C 360–63(1975) Ball Penetration in Fresh Portland Cement Concrete, Test for, **14**
C 361–78 Reinforced Concrete Low-Head Pressure Pipe, Spec. for, **16**
C 361M–78 Reinforced Concrete Low-Head Pressure Pipe (Metric), Spec. for, **16**
C 362 Discontinued
C 363–57(1980) Delamination Strength of Honeycomb Type Core Material, Test for, **25**
C 364–61(1980) Edgewise Compressive Strength of Flat Sandwich Constructions, Test for, **25**
C 365–57(1980) Flatwise Compressive Strength of Sandwich Cores, Test for, **25**
C 366–57(1980) Thickness of Sandwich Cores, Measurement of, **25**
C 367–78 Strength Properties of Prefabricated Architectural Acoustical Materials, Tests for, **18**
C 368–77 Impact Resistance of Ceramic Tableware, Test for, **17**
C 369 Discontinued—Replaced by C 674
C 370–56(1975) Moisture Expansion of Fired Whiteware Products, Test for, **17**
C 371–77 Wire-Cloth Sieve Analysis of Nonplastic Ceramic Powders, **17**
C 372–76 Linear Thermal Expansion of Porcelain Enamel and Glaze Frits and Fired Ceramic Whiteware Products by the Dilatometer Method, Test for, **17**
C 373–72(1977) Water Absorption, Bulk Density, Apparent Porosity, and Apparent Specific Gravity of Fired Whiteware Products, Test for, **17**
C 374–70(1976) Fusion Flow of Porcelain Enamel Frits (Flow-Button Methods), Tests for, **17**
C 375–58(1979) Water Used in Milling of Porcelain Enamel, Classification of, **17**
C 376 Discontinued
C 377–66(1977) Precast Reinforced Gypsum Slabs, Spec. for, **13**
C 378 Discontinued—Replaced by C 612
C 379 Discontinued—Replaced by C 593
C 380 Discontinued—Replaced by C 514
C 381 Discontinued—Replaced by C 552
C 382 Discontinued—Replaced by C 553
C 383–58(1979) Wet Adhesion of Thermal Insulating Cements to Metal, Test for, **18**
C 384–77 Impedance and Absorption of Acoustical Materials by the Impedance Tube Method, Test for, **18**
C 385–58(1977) Thermal Shock Resistance of Porcelain-Enameled Utensils, Test for, **17**
C 386–77 Chemical-Resistant Sulfur Mortars, Rec. Practice for Use of, **16**
C 387–80 Packaged, Dry, Combined Materials for Mortar and Concrete, Spec. for, **14**
C 388 Discontinued
C 389 Discontinued
C 390–79 Preformed Thermal Insulation Lots, Criteria for Sampling and Acceptance of, **18**
C 391 Discontinued
C 392 Discontinued—Replaced by C 612
C 393–62(1980) Flexure Test of Flat Sandwich Constructions, **25**
C 394–62(1980) Shear Fatigue of Sandwich Core Materials, Test for, **25**
C 395–80 Chemical-Resistant Resin Mortars, Spec. for, **16**
C 396–76 Compressive Strength of Chemically Setting Silicate and Silica Chemical-Resistant Mortars, Test for, **16**
C 397–79 Chemically Setting Chemical-Resistant Silicate and Silica Mortars, Rec. Practice for Use of, **16**
C 398–79 Hydraulic Cement Mortars in Chemical-Resistant Masonry, Rec. Practice for Use of, **16**
C 399–74(1980) Chemical-Resistant Resin Mortars, Rec. Practice for Use of, **16**
C 400–64(1981) Quicklime and Hydrated Lime for Neutralization of Waste Acid, Testing, **13**
C 401–77 Castable Refractories, Classification of, **17**
C 402 Discontinued—Replaced by C 618
C 403–80 Time of Setting of Concrete Mixtures by Penetration Resistance, Test for, **14**
C 404–76(1981) Aggregates for Masonry Grout, Spec. for, **14, 16**
C 405–60(1979) Consistency of Wet-Mixed Thermal Insulating Cement, Tests for, **18**
C 406–58(1976) Roofing Slate, Spec. for, **19**
C 407 Discontinued—Replaced by C 773
C 408–76 Thermal Conductivity of Whiteware Ceramics, Test for, **17**
C 409–79 Torsion Resistance of Laboratory Specimens of Porcelain Enameled Iron and Steel, Test for, **17**
C 410–60(1978) Industrial Floor Brick, Spec. for, **16**
C 411–61(1975) Hot-Surface Performance of High-Temperature Thermal Insulation, Test for, **18**
C 412–80 Concrete Drain Tile, Spec. for, **16**
C 412M–80a Concrete Drain Tile (Metric), Spec. for, **16**
C 413–80 Absorption of Chemical-Resistant, Mortars, Grouts, and Monolithic Surfacings, Test for, **16**
C 414–77 Working and Setting Times of Chemical-Resistant Silicate and Silica Mortars, Tests for, **16**
C 415–72(1976) Quicklime and Hydrated Lime for Calcium Silicate Products, Spec. for, **13**
C 416–70(1976) Silica Refractory Brick, Classification of, **17**
C 417–72(1978) Thermal Conductivity of Unfired Monolithic Refractories, Test for, **17**
C 418–76 Abrasion Resistance of Concrete by Sandblasting, Test for, **14**
C 419–81 Test Specimens of Mastic Thermal Insulation Coatings, Making and Curing, **18**
C 420 Discontinued
C 421–77 Tumbling Friability of Preformed Block-Type Thermal Insulation, Test for, **18**
C 422 Discontinued
C 423–81 Sound Absorption and Sound Absorption Coefficient by the Reverberation Room Method, Test for, **18**
C 424–80 Crazing Resistance of Fired Glazed Whitewares by Autoclave Treatment, Test for, **17**
C 425–77 Compression Joints for Vitrified Clay Pipe and Fittings, Spec. for, **16**
C 426–70(1976) Drying Shrinkage of Concrete Block, Test for, **16**
C 427–64(1972) Moisture Condition of Hardened Concrete by the Relative Humidity Method, Test for, **16**
C 428–80 Asbestos-Cement Nonpressure Sewer Pipe, Spec. for, **16**
C 429–65(1977) Sieve Analysis of Raw Materials for Glass Manufacture, **17**
C 430–79 Fineness of Hydraulic Cement by the No. 325 (45-μm) Sieve, Test for, **13**
C 431 Discontinued
C 432 Discontinued—Replaced by C 593
C 433–63(1976) Quicklime and Hydrated Lime for Hypochlorite Bleach Manufacture, Spec. for, **13**
C 434–61(1976) Insulating Firebrick for Linings of Industrial Furnaces Operated with a Neutral or Oxidizing Atmosphere, Spec. for, **17**
C 435–70(1976) Steel Pouring Pit Refractories, Classification of, **17**
C 436–70(1976) Reheat Change of Carbon Refractory Brick and Shapes, Test for, **17**
C 437 Discontinued—Replaced by C 134
C 438 Discontinued—Replaced by C 417
C 439–61(1977) Resistance to Thermal Spalling of Silica Brick, Test for, **17**
C 440 Discontinued
C 441–81 Effectiveness of Mineral Admixtures in Preventing Excessive Expansion of Concrete Due to the Alkali-Aggregate Reaction, Test for, **14**
C 442–81 Gypsum Backing Board, Spec. for, **13**
C 443–79 Joints for Circular Concrete Sewer and Culvert Pipe, Using Rubber Gaskets, Spec. for, **16**
C 443M–80 Joints for Circular Concrete Sewer and Culvert Pipe, Using Rubber Gaskets (Metric), Spec. for, **16**
C 444–80 Perforated Concrete Pipe, Spec. for, **16**
C 444M–80a Perforated Concrete Pipe (Metric), Spec. for, **16**
C 445 Discontinued
C 446–64(1977) Breaking Load and Calculated Modulus of Rupture of Preformed Insulation for Pipes, Test for, **18**
C 447–76 Maximum Use Temperature of Preformed Homogeneous Thermal Insulations, Rec. Practice for Estimating the, **18**
C 448–64(1972) Abrasion Resistance of Porcelain Enamels, Tests for, **17**
C 449–77 Mineral Fiber Hydraulic-Setting Thermal Insulating and Finishing Cement, Spec. for, **18**
C 450–76 Prefabrication and Field Fabrication of Thermal Insulating Fitting Covers for NPS Piping, Vessel Lagging, and Dished Head Segments, Rec. Practice for, **18**
C 451–75 Early Stiffening of Portland Cement (Paste Method), Test for, **13**
C 452–75(1981) Potential Expansion of Portland Cement Mortars Exposed to Sulfate, Test for, **13**
C 453 Discontinued—Replaced by C 580
C 454–77 Disintegration of Carbon Refractories by Alkali, Rec. Practice for, **17**
C 455–76 Chrome Brick, Chrome-Magnesite Brick, Magnesite-Chrome Brick, and Magnesite Brick, Classification of, **17**
C 456–68(1978) Hydration Resistance of Basic Brick, Test for, **17**
C 457–80 Microscopical Determination of Air-Void Content and Parameters of the Air-Void System in Hardened Concrete, Rec. Practice for, **14**
C 458–62(1977) Organic Fiber Content of Asbestos-Cement Products, Test for, **16**
C 459–63(1976) Asbestos-Cement Flat Sheets, Roofing and Siding Shingles, and Clapboards, Sampling and Testing, **16**
C460–74a(1979) Asbestos-Cement and Related Products, Def. of Terms Relating to, **16**
C 461–81 Bituminous Mastic Coating Used in Conjunction with Thermal Insulation, Testing, **18**
C 462 Discontinued—Replaced by C 700
C 463 Discontinued—Replaced by C 700
C 464–64(1976) Corrosion Effect of Thermal Insulating Cements on Base Metal, Test for, **18**
C 465–74(1979) Processing Additions for Use in the Manufacture of Hydraulic Cements, Spec. for, **13**
C 466–74(1979) Chemically Setting Silicate and Silica Chemical-Resistant Mortars, Spec. for, **16**
C 467–72(1977) Mullite Refractories, Classification of, **17**
C 468–70(1976) Granular Refractory Dolomite, Classification of, **17**
C 469–65(1975) Static Modulus of Elasticity and Poisson's Ratio of Concrete in Compression, Test for, **14**
C 470–79a Molds for Forming Concrete Test Cylinders Vertically, Spec. for, **14**
C 471–76 Gypsum and Gypsum Products, Chemical Analysis of, **13**
C 472–79 Gypsum Plasters and Gypsum Concrete, Physical Testing of, **13**
C 473–81 Gypsum Board Products, Gypsum Lath, Gypsum Partition Tile or Block, and Precast Reinforced Gypsum Slabs, Physical Testing of, **13**
C 474–67(1978) Joint Treatment Materials for Gypsum Wallboard Construction, Testing, **13**
C 475–81 Joint Treatment Materials for Gypsum Wallboard Construction, Spec. for, **13**
C 476–80 Grout for Reinforced and Nonreinforced Masonry, Spec. for, **16**
C 477 Discontinued
C 478–80 Precast Reinforced Concrete Manhole Sections, Spec. for, **16**
C 478M–80a Precast Reinforced Concrete Manhole Sections (Metric), Spec. for, **16**
C 479–77 Vitrified Clay Liner Plates, Spec. for, **16**
C 480–62(1980) Flexure Creep of Sandwich Constructions, Test for, **25**
C 481–62(1980) Laboratory Aging of Sandwich Constructions, Test for, **25**
C 482–78 Bond Strength of Ceramic Tile to Portland Cement, Test for, **17**
C 483–66(1975) Electrical Resistance of Conductive Ceramic Tile, Test for, **17**
C 484–66(1975) Thermal Shock Resistance of Glazed Ceramic Tile, Test for, **17**
C 485–73(1978) Warpage of Ceramic Tile, Measuring, **17**
C 486 Discontinued—Replaced by C 703
C 487–64(1976) Resistance to Dropping of Preformed Block-Type Thermal Insulation, Test for, **18**
C 488–79 Exterior Exposure Tests of Finishes for Thermal Insulation, Rec. Practice for Conducting, **18**
C 489 Discontinued
C 490–77 Apparatus for Use in Measurement of Length Change of Hardened Cement Paste, Mortar, and Concrete, Spec. for, **13, 14**
C 491–72(1977) Modulus of Rupture of Air-Setting Plastic Refractories, Test for, **17**
C 492–66(1977) Hydration of Granular Dead-Burned Refractory Dolomite, Test for, **17**
C 493–70(1976) Bulk Density and Porosity of Granular Refractory Materials by Mercury Displacement, Test for, **17**
C 494–80 Chemical Admixtures for Concrete, Spec. for, **14**
C 495–80 Compressive Strength of Lightweight Insulating Concrete, Test for, **14**
C 496–71(1979) Splitting Tensile Strength of Cylindrical Concrete Specimens, Test for, **14**
C 497–80 Concrete Pipe, Sections, or Tile, Testing, **16**
C 497M–80a Concrete Pipe, Sections, or Tile (Metric), Testing, **16**
C 498–65(1975) Perforated Clay Drain Tile, Spec. for, **16**
C 499–78 Facial Dimensions and Thickness of Flat, Rectangular Ceramic Wall and Floor Tile, Test for, **17**
C 500–79a Asbestos-Cement Pipe, Testing, **16**
C 501–80 Relative Resistance to Wear of Unglazed Ceramic Tile by the Taber Abraser, Test for, **17**
C 502–78 Wedging of Flat, Rectangular Ceramic Wall and Floor Tile, Test for, **17**
C 503–79 Marble Building Stone (Exterior), Spec. for, **19**
C 504 Discontinued
C 505–80 Nonreinforced Concrete Irrigation Pipe with Rubber Gasket Joints, Spec. for, **16**
C 505M–80a Nonreinforced Concrete Irrigation Pipe with Rubber Gasket Joints (Metric), Spec. for, **16**
C 506–80 Reinforced Concrete Arch Culvert, Storm Drain, and Sewer Pipe, Spec. for, **16**
C 506M–80a Reinforced Concrete Arch Culvert, Storm Drain, and Sewer Pipe (Metric), Spec. for, **16**
C 507–80 Reinforced Concrete Elliptical Culvert, Storm Drain, and Sewer Pipe, Spec. for, **16**
C 507M–80a Reinforced Concrete Elliptical Culvert, Storm Drain, and Sewer Pipe (Metric), Spec. for, **16**
C 508–78a Asbestors-Cement Underdrain Pipe, Spec. for, **16**
C 509–79 Cellular Elastomeric Preformed Gasket and Sealing Material, Spec. for, **18, 38**
C 510–77 Staining and Color Change of Single- or Multicomponent Joint Sealants, Test for, **18**
C 511–80 Moist Cabinets and Rooms Used in the Testing of Hydraulic Cements and Concretes, Spec. for, **13, 14**
C 512–76 Creep of Concrete in Compression, Test for, **14**
C 513–69(1976) Securing, Preparing, and Testing Specimens from Hardened Lightweight Insulating Concrete for Compressive Strength, **14**
C 514–77 Nails for the Application of Gypsum Wallboard, Spec. for, **13**
C 515–70(1976) Chemical-Resistant Ceramic Tower Packings, Spec. for, **16**
C 516–80 Vermiculite Loose Fill Insulation, Spec. for, **18**
C 517–71(1979) Diatomaceous Earth Block and Pipe Thermal Insulation, Spec. for, **18**
C 518–76 Steady-State Thermal Transmission Properties by Means of the Heat Flow Meter, Test for, **18, 44**
C 519–65(1975) Density of Fibrous Loose Fill Building Insulations, Test for, **18**
C 520–81 Density of Granular Loose Fill Insulations, Test for, **18**
C 521 Discontinued—Replaced by C 585
C 522–80 Airflow Resistance of Acoustical Materials, Test for, **18**
C 523–68(1981) Light Reflectance of Acoustical Materials by the Integrating Sphere Reflectometer, Test for, **18, 46**
C 524 Redesignated F 130
C 525 Redesignated F 131
C 526 Redesignated F 132
C 527 Redesignated F 133
C 528 Discontinued—Replaced by C 773
C 529 Discontinued
C 530–70(1975) Structural Clay Non-Load-Bearing Screen Tile, Spec. for, **16**
C 531–74 Shrinkage and Coefficient of Thermal Expansion of Chemical-Resistant Mortars, Grouts, and Monolithic Surfacings, Test for, **16**
C 532–66(1979) Structural Insulating Formboard (Cellulosic

a Radiant Heat Energy Source, Test for, 18
E 649–78 Bromine in Chlorine, Test for, 30
E 650–78 Mounting Piezoelectric Acoustic Emission Contact Sensors, Practice for, 11
E 651–78 Evaluating Capabilities of Agencies Involved in System Analysis and Compliance Assurance for Manufactured Building, Guidelines for, 18
E 652–78 Liquid Household Insecticides, Testing, 46
E 653–78 Effectiveness of Aerosol and Pressurized Space Spray Insecticides Against Flying Insects, Testing, 46
E 654–78 Effectiveness of Aerosol and Pressurized Spray Insecticides Against Cockroaches, Testing, 46
E 655–78 Evaluation of Nematicides Against Root-Knot Nematode—Population Eradication Test, Guidelines for, 46
E 656–78 Evaluation of Hatching Heterodera Schachtii Larvae, Guidelines for, 46
E 657–78 Comparative Acute and Long-Term Oral or Gustatory Avian Repellency, Test for, 46
E 658–78 Efficacy of Dog Repellents Designed to be Directly Applied to Garbage Bags, Test for, 46
E 659–78 Autoignition Temperature of Liquid Chemicals, Test for, 41
E 660–78 Accelerated Polishing of Aggregates or Pavement Surfaces Using a Small-Wheel Circular Track, Practice for, 15
E 661–78 Performance of Wood and Wood-Based Floor and Roof Sheathing Under Concentrated Static and Impact Loads, Test for, 18
E 662–79 Specific Optical Density of Smoke Generated by Solid Materials, Test for, 18
E 663–78 Flame Atomic Absorption Analysis, Practice for, 42, 12
E 664–78 Measurement of the Apparent Attenuation of Longitudinal Ultrasonic Waves by Immersion Method, Practice for the, 11
E 665–78 Determining Absorbed Dose versus Depth in Materials Exposed to the X-Ray Output of Flash X-Ray Machines, Practice for, 45
E 666–78 Absorbed Dose from Gamma or X Radiation, Practice for Calculating, 45
E 667–79 Clinical Thermometers (Maximum Self-Registering, Mercury-in-Glass), Spec. for, 44
E 668–78 Application of Thermoluminescence-Dosimetry(TLD) Systems for Determining Absorbed Dose in Radiation-Hardness Testing of Electronic Devices, Practice for, 45
E 669–79 Master Matrix for Nuclear Fuel Cycle Standards, 45
E 670–79 Side Force Friction on Paved Surfaces Using the Mu-Meter, Test for, 15
E 671–79 Maximum Permissible Thermal Residual Stress in Annealed Glass Laboratory Apparatus, Spec. for, 41
E 672–78 Disposable Glass Micropipets, Spec. for, 41
E 673–79a Surface Analysis, Def. of Terms Relating to, 42
E 674–80 Industrial Perforated Plate and Screens (Round Opening Series), Spec. for, 3, 41
E 675–79 Interchangeable Stopcocks and Stoppers, Spec. for, 41
E 676–79 Interchangeable Taper-Ground Joints, Spec. for, 41
E 677–80 Interchangeable Spherical Ground Joints, Spec. for, 41
E 678–80 Evaluation of Technical Data, Practice for, 41
E 679–79 Determination of Odor and Taste Thresholds by a Forced Choice Ascending Concentration Series Method of Limits, Practice for, 46
E 680–79 Drop Weight Impact Sensitivity of Solid-Phase Hazardous Materials, Test for, 41
E 681–79 Limits of Flammability of Chemicals, Test for, 41
E 682–79 Liquid Chromatography Terms and Relationships, Practice for, 42
E 683–79 Installation and Service of Solar Space Heating Systems for One- and Two-Family Dwellings, Practice for, 41
E 684–79 Approximate Determination of the Current Density of Large-Diameter Ion Beams for Depth Profiling of Solid Surfaces, Practice for, 42
E 685–79 Fixed-Wavelength Photometric Detectors Used in Liquid Chromatography, Practice for Testing, 42
E 686–80 Evaluation of Antimicrobial Agents in Aqueous Metal Working Fluids, 46
E 687–79 Sensory Evaluation Procedure to Establish Guidelines for Open Dating Food and Beverage Products, Practice for, 46
E 688–79 Waste Glass as a Raw Material for Manufacture of Glass Containers, Testing, 41
E 689–79 Reference Radiographs for Ductile Iron Castings, 2, 11
E 690–79 In-Situ Electromagnetic (Eddy Current) Examination of Nonmagnetic Heat Exchanger Tubes, Practice for, 11
E 691–79 Conducting an Interlaboratory Test Program to Determine the Precision of Test Methods, Practice for, 21, 41
E 692–79 Cesium-137 in Irradiated Nuclear Fuels by High-Resolution Gamma-Ray Spectral Analysis, Test for, 45
E 693–79 Characterizing Neutron Exposures in Ferritic Steels in Terms of Displacements Per Atom (DPA), Practice for, 45
E 694–79 Volumetric Ware, Spec. for, 41
E 695–79 Relative Resistance of Wall, Floor, and Roof Constructions to Impact Loading, Measuring, 18
E 696–79 Thermocouple Wire, 97 % Tungsten—3 % Rhenium and 75 % Tungsten—25 % Rhenium, Spec. for, 44
E 697–79 Use of Electron-Capture Detectors Used in Gas Chromatography, Practice for, 42
E 698–79 Arrhenius Kinetic Constants for Thermally Unstable Materials, Test for, 41
E 699–79 Criteria for Evaluation of Agencies Involved in Testing, Quality Assurance, and Evaluating Building Components in Accordance with Test Methods Promulgated by ASTM Committee E-6, Practice for, 18
E 700–79 Water in Gases Using Karl Fischer Reagent, Test for, 30
E 701–80 Municipal Ferrous Scrap, Testing, 41
E 702–79 Municipal Ferrous Scrap, Spec. for, 41
E 703–79 Electromagnetic (Eddy Current) Sorting of Nonferrous Metals, Practice for, 11
E 704–79 Fast-Neutron Flux Density by Radioactivation of Uranium-238, Measuring, 45
E 705–79 Fast-Neutron Flux Density by Radioactivation of Neptunium-237, Measuring, 45
E 706–79 Irradiation Surveillance Dosimetry of Pressure Vessels of Light-Water Reactors, Master Matrix of Procedures for, 45
E 707–79 Skid Resistance of Paved Surfaces Using the North Carolina State University Variable-Speed Friction Tester, Test for, 15
E 708–79 Waste Glass as a Raw Material for the Manufacture of Glass Containers, Spec. for, 41
E 709–80 Magnetic Particle Examination, Practice for, 11
E 710–79 Comparing EMF Stabilities of Base-Metal Thermoelements in Air Using Dual, Simultaneous, Thermal-EMF Indicators, 44
E 712–80 Laboratory Screening of Metallic Containment Materials for Use with Liquids in Solar Heating and Cooling Systems, Practice for, 41
E 713–80 Scales for Metric Building Drawings, 18
E 714–80 Disposable Glass Serological Pipets, Spec. for, 41
E 715–80 Gravity-Convection and Forced-Circulation Water Baths, Spec. for, 41
E 716–80 Sampling of Aluminum and Its Alloys for Spectrochemical Analysis, Practices for, 42
E 717–80 Preparation of the Accreditation Section of Acoustical Test Standards, Guide for, 18
E 718–80 Cartridge Brass, Spectrographic Analysis of, 42
E 719–80 Indentation of Building Materials Surfaces Under Concentrated Loads as a Measure of Serviceability, Test for, 18
E 720–80 Selection of a Set of Neutron-Activation Foils for Determining Neutron Spectra Used in Radiation-Hardness Testing of Electronics, Guide for, 45
E 721–80 Determining Neutron Energy Spectra with Neutron-Activation Foils for Radiation Hardness Testing of Electronics, 45
E 722–80 Characterizing Neutron Energy Fluence Spectra in Terms of an Equivalent Monoenergetic Neutron Fluence for Radiation-Hardness Testing of Electronics, Practice for, 45
E 723–80 Efficacy of Antimicrobials as Preservatives for Aqueous-Based Products Used in the Paper Industry (Bacterial Spoilage), Test for, 46
E 724–80 Conducting Static Basic Acute Toxicity Tests with Larvae of Four Species of Bivalve Molluscs, Practice for, 46
E 725–80 Granular Carriers and Granular Pesticides, Sampling, 46
E 726–80 Particle Size Distribution of Granular Carriers or Granular Pesticides, Test for, 46
E 727–80 Free-Fall Bulk Density, Test for, 46
E 728–80 Resistance to Attrition of Granular Carriers and Granular Pesticides, Test for, 46
E 729–80 Conducting Acute Toxicity Tests with Fishes, Macroinvertebrates, and Amphibians, Practice for, 46
E 730–80 Developing Functional Designs for Computerized Systems, Guide for, 42
E 731–80 Procurement of Commercially Available Computerized Systems, Guide for, 42
E 732–80 Disposable Pasteur-Type Pipet, Spec. for, 41
E 733–80 44.7-μL Disposable Glass Micropipets, Spec. for, 41
E 734–80 Disposable Glass Blood Sample Capillary Tube (Microhematocrit), Spec. for, 41
E 735–80 Minimum Performance Standards for Hand-Held Pipettors with Pipet Tips, Spec. for, 41
E 736–80 Cohesion/Adhesion of Sprayed Fire-Resistive Materials Applied to Structural Members, Test for, 18
E 737–80 Installation of Storm Windows, Replacement Windows, Multi-Glazing, Storm Doors, and Replacement Doors, Practice for, 18
E 738–80 Aluminum in Iron Ores by Complexometric Titration, Test for, 12
E 739–80 Statistical Analysis of Linear or Linearized Stress-Life (*S-N*) and Strain-Life (*ε-N*) Fatigue Data, Practice for, 10
E 740–80 Fracture Testing with Surface-Crack Tension Specimens, Practice for, 10
E 741–80 Measuring Air Leakage Rate by the Tracer Dilution Method, Practice for, 18
E 742–81 Fluid Aqueous and Chemical Environmentally Affected Fatigue Testing, Def. of Terms Relating to, 10
E 743–80 Spectrochemical Laboratory Quality Assurance, Guide for, 42
E 744–80 Evaluating Solar Absorptive Materials for Thermal Applications, Practice for, 41
E 745–80 Simulated Service Testing for Corrosion of Metallic Containment Materials for Use with Heat Transfer Fluids in Solar Heating and Cooling Systems, Practice for, 41
E 746–80 Determining Relative Image Quality Response of Industrial Radiographic Film, 11
E 747–80 Controlling Quality of Radiographic Testing Using Wire Penetrameters, 11
E 748–80 Thermal Neutron Radiography of Materials, Practice for, 11
E 749–80 Acoustic Emission Monitoring During Continuous Welding, Practice for, 11
E 750–80 Measuring Operating Characteristics of Acoustic Emission Instrumentation, Practice for, 11
E 751–80 Acoustic Emission Monitoring During Resistance Spot Welding, Practice for, 11
E 752–81 Safety and Health Requirements Relating to Occupational Exposure to Carbon Disulfide, Practice for, 41
E 753–80 Municipal Aluminum Scrap (MAS), Spec. for, 41
E 754–80 Pullout Resistance of Tires and Anchors Embedded in Masonry Mortar Joints, Test for, 18
E 755–80 Assay of Dicumyl Peroxide by Liquid Chromatography, 30
E 756–80 Measuring Vibration-Damping Properties of Materials, 18
E 757–80 Efficacy of Canine Reproduction Inhibitors, Test for, 46
E 758–80 Mammalian Acute Percutaneous Toxicity, Test for, 46
E 759–80 Effect of Deflection of Sprayed Fire-Resistive Material Applied to Structural Members, Test for, 18
E 760–80 Effect of Impact on Bonding of Sprayed Fire-Resistive Material Applied to Structural Members, Test for, 18
E 761–80 Compressive Strength of Sprayed Fire-Resistive Material Applied to Structural Members, Test for, 18
E 763–80 Calculation of Absorbed Dose from Neutron Irradiation by Application of Threshold-Foil Measurement Data, 45
E 764–80 Identifying Test Methods for Breeder Reactor Core Materials, Practice for, 45
E 765–80 Evaluation of Cover Materials for Flat Plate Solar Collectors, Practice for, 41
E 766–80 Calibrating the Magnification of SEM Using NBS SRM-484, Practice for, 11
E 767–80 Shear Resistance of Steel Truss Plates, Test for, 18
E 768–80 Preparing and Evaluating Specimens for Automatic Inclusion Assessment of Steel, Practice for, 11
E 769–81 Odor of Methanol, Ethanol, *n*-Propanol, and Isopropanol, Tests for, 46
E 770–80 Classifying Pavement Surface Textures, 15
E 771–81 Spontaneous Heating Tendency of Materials, Test for, 41
E 772–80 Solar Energy Conversion, Def. of Terms Relating to, 41
E 773–81 Seal Durability of Sealed Insulating Glass Units, Test for, 18
E 774–81 Sealed Insulating Glass Units, Spec. for, 18
E 775–81 Total Sulfur in the Analysis Sample of Refuse-Derived Fuel, Tests for, 41
E 776–81 Forms of Chlorine in Refuse-Derived Fuel, Test for, 41
E 771–81 Carbon and Hydrogen in the Analysis Sample of Refuse-Derived Fuel, Test for, 41
E 778–81 Nitrogen in the Analysis Sample of Refuse-Derived Fuel, Test for, 41
E 779–81 Measuring Air Leakage by the Fan Pressurization Method, Practice for, 18
E 781–81 Evaluating Absorptive Solar Receiver Materials When Exposed to Conditions Simulating Stagnation in Solar Collectors with Cover Plates, Practice for, 41
E 782–81 Exposure of Cover Materials for Solar Collectors to Natural Weathering Under Conditions Simulating Operational Mode, Practice for, 41
E 783–81 Field Measurement of Air Leakage Through Installed Exterior Windows and Doors, 18
E 784–81 Clamps, Utility, Laboratory, and Holders, Buret and Clamp, Spec. for, 41
E 785–81 Crucibles, Ignition, Laboratory Metal, Spec. for, 41
E 786–81 Dishes, Evaporating, Platinum, Spec. for, 41
E 787–81 Disposable Glass Micro Blood Collection Pipets, Spec. for, 41
E 789–81 Pressure and Rate of Pressure Rise for Dust Explosions in a Closed Vessel, Test for, 41
E 790–81 Residual Moisture in Refuse-Derived Fuel Analysis Sample, Test for, 41
E 791–81 Calculating Refuse-Derived Fuel Analysis Data from As-Determined to Different Bases, 41
E 792–81 Computer Automation in the Clinical Laboratory, Guide for, 42
E 793–81 Heats of Fusion and Crystallization by Differential Scanning Calorimetry, Test for, 41
E 794–81 Melting Temperatures and Crystallization Temperatures by Thermal Analysis, Test for, 41
E 795–81 Mounting Test Specimens During Sound Absorption Test, Practices for, 18
E 796–81 Ductility Testing of Metallic Foil, 10
E 797–81 Measuring Thickness by Manual Ultrasonic Pulse-Echo Contact Method, Practice for, 11
E 798–81 Conducting Irradiations at Accelerator-Based Neutron Sources, Practice for, 45
E 800–81 Measurement of Gases Present or Generated During Fires, Guide for, 18
E 801–81 Controlling Quality of Radiographic Testing of Electronic Devices, 11
E 803–81 Determining the *L/D* Ratio of Neutron Radiography Beams, 11
E 804–81 Calibration of the Ultrasonic Test System by Extrapolation Between Flat Botton Hole Sizes, Practice for, 11
E 805–81 Identification of Instrumental Methods of Color or Color-Difference, Practice for, 46
E 806–81 Carbon Tetrachloride and Chloroform in Liquid Chlorine by Direct Injection (Gas Chromatographic Procedure), Test for, 30
E 807–81 Metallographic Laboratory Evaluation, Practice for, 11
E 808–81 Describing Retroreflection, Practice for, 46
E 809–81 Measuring Photometric Characteristics of Retroreflectors, Practice for, 46
E 810–81 Coefficient of Retroreflection or Retroreflective Sheeting, Test for, 46
E 811–81 Measuring Colorimetric Characteristics of Retroreflectors Under Nighttime Conditions, Practice for, 46
E 813–81 J_{Ic}, a Measure of Fracture Toughness, Test for, 10
E 814–81 Fire Tests of Through-Penetration Fire Stops, 18
E 815–81 Calcium Fluoride in Fluorspar by Complexometric Titration, Test for, 12
E 820–81 Determining Absolute Absorbed Dose Rates for Electron Beams, Practice for, 45
E 821–81 Measurement of Mechanical Properties During Charged-Particle Irradiation, Practice for, 45

F 601–78 Fluorescent Penetrant Inspection of Metallic Surgical Implants, Practice for, **46**
F 602–78 Criteria for Implantable Thermoset Epoxy Plastics, **46**
F 603–78 High-Purity Dense Aluminum Oxide for Surgical Implant Application, Spec. for, **46**
F 604–78 Silicone Elastomers Used in Medical Applications, Classification for, **46**
F 605–78 Determining the Compatibility of One-Time Carbon Paper with Carbonless Copy Papers When Interleaved into the Same Form, Practice for, **20**
F 606–79a Conducting Tests to Determine the Mechanical Properties of Externally and Internally Threaded Fasteners, Washers, and Rivets, **4**
F 607–79 Adhesion of Gasket Materials to Metal Surfaces, Test for, **38**
F 608–79 Laboratory Method for Evaluation of Carpet-Embedded Dirt Removal Effectiveness of Household Vacuum Cleaners, **46**
F 609–79 Static Slip Resistance of Footwear, Sole, Heel, or Related Materials by Horizontal Pull Slipmeter (HPS), Test for, **46**
F 610–79 Estimating the Quality of Molded Poly (Vinyl Chloride) (PVC) Plastic Pipe Fittings by the Heat Reversion Technique, Practice for, **34**
F 611–79 Wavefront Distortion of Nominally Plane Optical Elements Due to Refractive Index Inhomogeneity, Test for, **43**
F 612–80 Cleaning Surfaces of Polished Silicon Slices, Practice for, **43**
F 613–79 Measuring Diameter of Silicon Slices and Wafers, **43**
F 614–80 Distortion of Optical Lenses Used in Photomask Fabrication, Test for, **43**
F 615–79 Determining Safe Current Pulse Operating Regions for Metallization on Semiconductor Components, Practice for, **43**
F 616–80 Measuring MOSFET Drain Leakage Current, **43**
F 617–79 Measuring MOSFET Linear Threshold Voltage, **43**
F 618–79 Measuring MOSFET Saturated Threshold Voltage, **43**
F 619–79 Extraction of Medical Plastics, Practice for, **46**
F 620–79 Titanium 6Al-4V ELI Alloy Forgings for Surgical Implants, Spec. for, **46**
F 621–79 Stainless Steel Forgings for Surgical Implants, Spec. for, **46**
F 622–79 Preformed Cranioplasty Plates That Can Be Altered, Spec. for, **46**
F 623–81 Foley Catheter, Performance Spec. for, **46**
F 625–79 Environmental Conditions Relevant to Spill Control Systems for Use on Water, Description of, **46**
F 626–79 Fence Fittings, Spec. for, **3**
F 627–79 Testing Flake of Film Typewriter Ribbons, Practice for, **20**
F 628–79 Acrylonitrile-Butadiene-Styrene(ABS) Plastic Drain, Waste, and Vent Pipe Having a Foam Core, Spec. for, **34**
F 629–79 Radiography of Cast Metallic Surgical Implants, Practice for, **46**
F 630–80 Safety Consideration for Household Vacuum Cleaners, Spec. for, **46**
F 631–80 Full-Scale Advancing Spill Removal Devices, Testing, **46**
F 632–79 Small-Signal Common Emitter Current Gain of Transistors at High Frequencies, Measurement of, **43**
F 633–79 Use of the High-Speed Printer as a Test Instrument for Carbon Paper, Practice for, **20**
F 634–79 Measurement of the Coating Transfer Resistance of Mechanical Carbonless CB Paper, Practice for, **20**
F 635–80 Selection of Tests for Material Properties of Liquid Thermoset Encapsulating Compounds for Electronic and Microelectronic Encapsulation, Guide for, **43**
F 636–80 Selection of Tests for Material Properties of Transfer Molding Compounds for Electronic and Microelectronic Encapsulation, Guide for, **43**
F 637–79 Format of 19 and 35-mm Wide Testable Tape Carrier for Tape Carrier-Bonded Semiconductor Devices, Spec. for, **43**
F 638–79 Fine Aluminum-1 % Magnesium Wire for Semiconductor Lead-Bonding, Spec. for, **43**
F 639–79 Polyethylene Plastics for Medical Applications, Spec. for, **46**
F 640–79 Radiopacity of Plastics for Medical Use, Tests for, **46**
F 641–79 Implantable Epoxy Electronic Encapsulants, Spec. for, **46**
F 642–79 Stainless Steel Flexible Wire for Surgical Fixation for Soft Tissue, Spec. for, **46**
F 643–79 Wrought Cobalt-Chromium Alloy Flexible Wire for Surgical Fixations for Soft Tissue, Spec. for, **46**
F 644–79 Wrought Cobalt-Chromium Alloy Flexible Wire for Surgical Fixations for Bone, Spec. for, **46**
F 647–79 Evaluation and Specifying Implantable Shunt Assemblies for Neurosurgical Application, Practice for, **46**
F 648–80 Ultra-High-Molecular-Weight Polyethylene Powder and Fabricated Form for Surgical Implants, Spec. for, **46**
F 649–80 Secondary Calibration of Airborne Particle Counter Using Comparison Procedures, Practice for, **25**
F 650–80 Determining Relative Bias of Two Particle Counters Using Comparison Procedures, Practice for, **25**
F 651–80 Particle Counter Single-Point Calibration by the Median Method, **25**
F 652–68(1978) Mica Stampings or Substitutes Used in Electron Devices and Lamps, Measuring, **43**
F 653–80 Electrostatic Masters, Evaluation of, **20**
F 654–80 Residential Chain Link Fence Gates, Spec. for, **3**
F 655–80 Test Carpets and Pads for Vacuum Cleaner Testing, Spec. for, **46**
F 656–80 Primers for Use in Solvent Cement Joints of Poly(Vinyl Chloride) (PVC) Plastic Pipe and Fittings, Spec. for, **34**
F 657–80 Measuring Warp and Total Thickness Variation on Silicon Slices and Wafers by a Noncontact Scanning Method, **43**
F 658–80 Defining, Counting, and Sizing Accuracy of a Liquid Borne Particle Using Wear-Monodisperse Spherical Particulate Materials, Practice for, **25**
F 659–80 Eye Protective Devices, Spec. for, **46**
F 661–80 Particle Count and Size Distribution Measurement in Batch Samples Using an Optical Particle Counter, Practice for, **46**
F 662–80 Particle Count and Size Distribution in Batch Samples for Filter Evaluation Using an Electrical Resistance Particle Counter, Measurement of, **46**
F 663–80 Manual Analysis of Interferometric Data by Least-Squares Fitting to a Plane Reference Surface, Practice for, **43**
F 664–80 Manual Analysis of Interferometric Data by Least-Squares Fitting to a Spherical Reference Surface and for Computer-Aided Analysis of Interferon Metric Data by Least-Squares Fitting to Both Plane and Spherical Reference Surfaces, Practice for, **43**
F 665–80 Vinyl Chloride Plastics Used in Biomedical Application, Classification for, **46**
F 666–80 Stainless Steel Flexible Wire for Surgical Fixation for Bone, Spec. for, **46**
F 667–80 10, 12, and 15-in. Corrugated Polyethylene Tubing, Spec. for, **34**
F 670–80 Tanks, 5 and 10-gal (20 and 40-L) Dispensing, Spec. for, **46**
F 671–81 Measuring Fiducial Flat Length and Deviation, **43**
F 672–80 Measuring Resistivity Profile Perpendicular to the Surface of a Silicon Wafer Using a Spreading Resistance Probe, **43**
F 673–80 Measuring Resistivity of Semiconductor Slices with a Noncontact Eddy-Current Gage, **43**
F 674–80 Preparing High-Resistivity *n*-Type Silicon for Spreading Resistance Measurements, Practice for, **43**
F 675–80 Measuring Nonequilibrium Transient Photocurrents from *p-n* Functions, **43**
F 676–80 Measuring Unsaturated TTL Sink Current, **43**
F 677–80 Fluid and Grease Resistance of Thermoset Encapsulating Compounds Used in Electronic and Microelectronic Applications, Test for, **43**
F 678–80 Polyethylene Gas Pressure Pipe, Tubing, and Fittings, Spec. for, **34**
F 679–80 Poly(Vinyl Chloride) (PVC) Large-Diameter Plastic Gravity Sewer Pipe and Fittings, Spec. for, **34**
F 680–80 Nails, Testing, **4**
F 681–80 Use of Branch Connections, Practice for, **46**
F 682–80 Wrought Carbon Steel Sleeve-Type Pipe Couplings, Spec. for, **46**
F 683–80 Selection and Application of Thermal Insulation for Piping and Machinery, Practice for, **46**
F 685–80 Determining Toner Usage, Efficiency, and Dusting in Copiers Using Single-Component Toner Systems, Practice for, **20**
F 686–80 Evaluation of Image Quality Produced by a Carbonless Copy Paper with an Electric Typewriter, Practice for, **20**
F 687–80 On-Site Calibration of Liquid-borne Automatic Particle Counters with Adjustable Individual Size Thresholds, Practice for, **25**
F 688–80 Wrought Cobalt-Nickel-Chromium-Molybdenum Alloy Plate, Sheet, and Foil for Surgical Implants, Spec. for, **46**
F 689–80 Determination of the Temperature of Above-Ground Plastic Gas Pressure Pipe Within Metallic Casings, Practice for, **34**
F 690–80 Underground Installation of Thermoplastic Pressure Piping Irrigation Systems, Practice for, **34**
F 691–80 Preparing Photoplates for Measuring Flatness Deviation, Practice for, **43**
F 692–80 Measuring Adhesion Strength of Solderable Films to Substrates, **43**
F 693–80 Sealing Seams of Resilient Sheet Floor Products by Use of Liquid Seam Sealers, Practice for, **46**
F 694–80 Heel Attaching Strength of Women's Shoes, Test for, **46**
F 695–80 Evaluation of Test Data Obtained by Using the Horizontal Pull Slipmeter (HPS) or the James Machine for Measurement of Static Slip Resistance of Footwear Sole, Heel, or Related Materials, Practice for, **46**
F 696–80 Leather Protectors for Rubber Insulating Gloves and Mittens, Spec. for, **40**
F 697–80 Care and Use of Mouthguards, Practice for, **46**
F 698–81 Physical Information to Be Provided for Amusement Rides and Devices, Spec. for, **46**
F 700–81 Care and Handling of Intracranial Aneurysm Clips and Instruments, Practice for, **46**
F 701–81 Care and Handling of Neurosurgical Implants and Instruments, Practice for, **46**
F 702–81 Polysulfone Resin for Medical Applications, Spec. for, **46**
F 703–81 Implantable Breast Prostheses, Spec. for, **46**
F 704–81 Selecting Bolting Lengths for Piping System Flanged Joints, Practice for, **46**
F 707–81 Modular Gage Boards, Spec. for, **46**
F 708–81 Design and Installation of Rigid Pipe Hangers, Practice for, **46**
F 709–81 Gasket—Asbestos Metallic Cloth Material, Spec. for, **38**
F 715–81 Spill Control Barrier Membrane Materials, Testing, **46**
F 718–81 Shipbuilders and Marine Paints and Coatings Products/Procedure Data Sheet, Standard for, **46**
F 719–81 Biomaterials in Rabbits for Primary Skin Irritation, Practice for Testing, **46**
F 720–81 Guinea Pigs for Contact Allergens: Guinea Pig Maximization Test, Practice for Testing, **46**
F 721–81 Gage Piping Assemblies, Spec. for, **46**
F 722–81 Weld Joint Design for Shipboard Piping Systems, Spec. for, **46**
F 723–81 Conversion Between Resistivity and Dopant Density for Boron-Doped and Phosphorus-Doped Silicon, Practice for, **43**
F 727–81 Measurement of Transmittance of See-Through Photoplate, **43**
F 728–81 Preparation of an Optical Microscope for Dimensional Measurements, Practice for, **43**
F 729–81 Temperature Coefficient of Resistance of Film Resistors, Tests for, **43**
F 730–81 Hermeticity of Electron Devices by a Weight-Gain Test, Tests for, **43**
F 733–81 Optical Distortion and Deviation of Transparent Parts Using the Double-Exposure Method, Test for, **25**
F 734–81 Shear Strength of Fusion-Bonded Polycarbonate Aerospace Glazing Material, Test for, **25**
F 735–81 Abrasion Resistance of Transparent Plastics and Coatings Using the Oscillating Sand Method, Practice for, **25**
F 736–81 Impact Resistance of Monolithic Polycarbonate Sheet by Means of a Falling Weight, Test for, **25**

EXHIBIT 10

1982 Annual Book of ASTM Standards

Index

C 442–81 Gypsum Backing Board, Spec. for, 13
C 443–79 Joints for Circular Concrete Sewer and Culvert Pipe, Using Rubber Gaskets, Spec. for, 16
C 443M–80 Joints for Circular Concrete Sewer and Culvert Pipe, Using Rubber Gaskets (Metric), Spec. for, 16
C 444–80 Perforated Concrete Pipe, Spec. for, 16
C 444M–80a Perforated Concrete Pipe (Metric), Spec. for, 16
C 445 Discontinued
C 446–82 Breaking Load and Calculated Modulus of Rupture of Preformed Insulation for Pipes, Test for, 18
C 447–76(1982) Maximum Use Temperature of Preformed Homogeneous Thermal Insulations, Rec. Practice for Estimating the, 18
C 448–81 Abrasion Resistance of Porcelain Enamels, Tests for, 17
C 449–82 Mineral Fiber Hydraulic-Setting Thermal Insulating and Finishing Cement, Spec. for, 18
C 450–76(1981) Prefabrication and Field Fabrication of Thermal Insulating Fitting Covers for NPS Piping, Vessel Lagging, and Dished Head Segments, Rec. Practice for, 18
C 451–75 Early Stiffening of Portland Cement (Paste Method), Test for, 13
C 452–75(1981) Potential Expansion of Portland Cement Mortars Exposed to Sulfate, Test for, 13
C 453 Discontinued—Replaced by C 580
C 454–77 Disintegration of Carbon Refractories by Alkali, Rec. Practice for, 17
C 455–76(1981) Chrome Brick, Chrome-Magnesite Brick, Magnesite-Chrome Brick, and Magnesite Brick, Classification of, 17
C 456–68(1978) Hydration Resistance of Basic Brick, Test for, 17
C 457–82 Microscopical Determination of Air-Void Content and Parameters of the Air-Void System in Hardened Concrete, Rec. Practice for, 14
C 458–62(1977) Organic Fiber Content of Asbestos-Cement Products, Test for, 16
C 459–63(1976) Asbestos-Cement Flat Sheets, Roofing and Siding Shingles, and Clapboards, Sampling and Testing, 16
C 460–81 Asbestos-Cement and Related Products, Def. of Terms Relating to, 16
C 461–81 Bituminous Mastic Coating Used in Conjunction with Thermal Insulation, Testing, 18
C 462 Discontinued—Replaced by C 700
C 463 Discontinued—Replaced by C 700
C 464–64(1976) Corrosion Effect of Thermal Insulating Cements on Base Metal, Test for, 18
C 465–74(1979) Processing Additions for Use in the Manufacture of Hydraulic Cements, Spec. for, 13
C 466–74(1979) Chemically Setting Silicate and Silica Chemical-Resistant Mortars, Spec. for, 16
C 467–72(1977) Mullite Refractories, Classification of, 17
C 468–70(1976) Granular Refractory Dolomite, Classification of, 17
C 469–81 Static Modulus of Elasticity and Poisson's Ratio of Concrete in Compression, Test for, 14
C 470–81 Molds for Forming Concrete Test Cylinders Vertically, Spec. for, 14
C 471–76 Gypsum and Gypsum Products, Chemical Analysis of, 13
C 472–79 Gypsum Plasters and Gypsum Concrete, Physical Testing of, 13
C 473–81 Gypsum Board Products, Gypsum Lath, Gypsum Partition Tile or Block, and Precast Reinforced Gypsum Slabs, Physical Testing of, 13
C 474–67(1978) Joint Treatment Materials for Gypsum Wallboard Construction, Testing, 13
C 475–81 Joint Treatment Materials for Gypsum Wallboard Construction, Spec. for, 13
C 476–80 Grout for Reinforced and Nonreinforced Masonry, Spec. for, 16
C 477 Discontinued
C 478–80 Precast Reinforced Concrete Manhole Sections, Spec. for, 16
C 478M–80a Precast Reinforced Concrete Manhole Sections (Metric), Spec. for, 16
C 479–77 Vitrified Clay Liner Plates, Spec. for, 16
C 480–62(1980) Flexure Creep of Sandwich Constructions, Test for, 25
C 481–62(1980) Laboratory Aging of Sandwich Constructions, Test for, 25
C 482–81 Bond Strength of Ceramic Tile to Portland Cement, Test for, 17
C 483–66(1981) Electrical Resistance of Conductive Ceramic Tile, Test for, 17
C 484–66(1981) Thermal Shock Resistance of Glazed Ceramic Tile, Test for, 17
C 485–73(1978) Warpage of Ceramic Tile, Measuring, 17
C 486 Discontinued—Replaced by C 703
C 487–64(1976) Resistance to Dropping of Preformed Block-Type Thermal Insulation, Test for, 18
C 488–79 Exterior Exposure Tests of Finishes for Thermal Insulation, Rec. Practice for Conducting, 18
C 489 Discontinued
C 490–77 Apparatus for Use in Measurement of Length Change of Hardened Cement Paste, Mortar, and Concrete, Spec. for, 13, 14
C 491–72(1977) Modulus of Rupture of Air-Setting Plastic Refractories, Test for, 17
C 492–66(1977) Hydration of Granular Dead-Burned Refractory Dolomite, Test for, 17
C 493–70(1976) Bulk Density and Porosity of Granular Refractory Materials by Mercury Displacement, Test for, 17
C 494–81 Chemical Admixtures for Concrete, Spec. for, 14
C 495–80 Compressive Strength of Lightweight Insulating Concrete, Test for, 14
C 496–71(1979) Splitting Tensile Strength of Cylindrical Concrete Specimens, Test for, 14
C 497–81 Concrete Pipe, Sections, or Tile, Testing, 16
C 497M–81 Concrete Pipe, Sections, or Tile (Metric), Testing, 16
C 498–65(1981) Perforated Clay Drain Tile, Spec. for, 16
C 499–78 Facial Dimensions and Thickness of Flat, Rectangular Ceramic Wall and Floor Tile, Test for, 17
C 500–79a Asbestos-Cement Pipe, Testing, 16
C 501–80 Relative Resistance to Wear of Unglazed Ceramic Tile by the Taber Abraser, Test for, 17
C 502–78 Wedging of Flat, Rectangular Ceramic Wall and Floor Tile, Test for, 17
C 503–79 Marble Building Stone (Exterior), Spec. for, 19
C 504 Discontinued
C 505–80 Nonreinforced Concrete Irrigation Pipe with Rubber Gasket Joints, Spec. for, 16
C 505M–80a Nonreinforced Concrete Irrigation Pipe with Rubber Gasket Joints (Metric), Spec. for, 16
C 506–81a Reinforced Concrete Arch Culvert, Storm Drain, and Sewer Pipe, Spec. for, 16
C 506M–81a Reinforced Concrete Arch Culvert, Storm Drain, and Sewer Pipe (Metric), Spec. for, 16
C 507–81a Reinforced Concrete Elliptical Culvert, Storm Drain, and Sewer Pipe, Spec. for, 16
C 507M–81a Reinforced Concrete Elliptical Culvert, Storm Drain, and Sewer Pipe (Metric), Spec. for, 16
C 508–81 Asbestos-Cement Underdrain Pipe, Spec. for, 16
C 509–79 Cellular Elastomeric Preformed Gasket and Sealing Material, Spec. for, 18, 38
C 510–77 Staining and Color Change of Single- or Multicomponent Joint Sealants, Test for, 18
C 511–80 Moist Cabinets, Moist Rooms and Water Storage Tanks Used in the Testing of Hydraulic Cements and Concretes, Spec. for, 13, 14
C 512–76 Creep of Concrete in Compression, Test for, 14
C 513–69(1976) Securing, Preparing, and Testing Specimens from Hardened Lightweight Insulating Concrete for Compressive Strength, 14
C 514–77 Nails for the Application of Gypsum Wallboard, Spec. for, 13
C 515–70(1976) Chemical-Resistant Ceramic Tower Packings, Spec. for, 16
C 516–80 Vermiculite Loose Fill Insulation, Spec. for, 18
C 517–71(1979) Diatomaceous Earth Block and Pipe Thermal Insulation, Spec. for, 18
C 518–76 Steady-State Thermal Transmission Properties by Means of the Heat Flow Meter, Test for, 18, 44
C 519–65(1975) Density of Fibrous Loose Fill Building Insulations, Test for, 18
C 520–81 Density of Granular Loose Fill Insulations, Test for, 18
C 521 Discontinued—Replaced by C 585
C 522–80 Airflow Resistance of Acoustical Materials, Test for, 18
C 523–68(1981) Light Reflectance of Acoustical Materials by the Integrating Sphere Reflectometer, Test for, 18, 46
C 524 Redesignated F 130
C 525 Redesignated F 131
C 526 Redesignated F 132
C 527 Redesignated F 133
C 528 Discontinued—Replaced by C 773
C 529 Discontinued
C 530–70(1981) Structural Clay Non-Load-Bearing Screen Tile, Spec. for, 16

C 531–81 Linear Shrinkage and Coefficient of Thermal Expansion of Chemical Resistant Mortars, Tile Grouts, and Monolithic Surfacings, Test for, 16
C 532–66(1979) Structural Insulating Formboard (Cellulosic Fiber), Spec. for, 18
C 533–80 Calcium Silicate Block and Pipe Thermal Insulation, Spec. for, 18
C 534–77 Preformed Flexible Elastomeric Cellular Thermal Insulation in Sheet and Tubular Form, Spec. for, 18
C 535–81 Resistance to Degradation of Large-Size Coarse Aggregate by Abrasion and Impact in the Los Angeles Machine, Test for, 14, 15
C 536–77 Continuity of Coatings in Glassed Steel Equipment by Electrical Testing, Test for, 17
C 537–81 Reliability of Glass Coatings on Glassed Steel Reaction Equipment by High Voltage, Test for, 17
C 538–67(1977) Color Retention of Red, Orange, and Yellow Porcelain Enamels, Test for, 17
C 539–78 Linear Thermal Expansion of Porcelain Enamel and Glaze Frits and Ceramic Whiteware Materials by the Interferometric Method, Test for, 17
C 540–78 Image Gloss of Porcelain Enamel Surfaces, Test for, 17
C 541–81 Linings for Asbestos-Cement Pipe, Spec. for, 16
C 542–76(1982) Lock-Strip Gaskets, Spec. for, 18, 38
C 543–81 Slate Blackboards, Spec. for, 19
C 544–68(1979) Hydration of Magnesite or Periclase Grain, Test for, 17
C 545–70(1976) Zircon Refractories, Classification of, 17
C 546–67(1977) Load Testing Refractory Brick at High Temperatures, Long-Time, 17
C 547–77 Mineral Fiber Preformed Pipe Insulation, Spec. for, 18
C 548–71(1977) Dimensional Stability of Low-Temperature Thermal Block and Pipe Insulation, Test for, 18
C 549–81 Perlite Loose Fill Insulation, Spec. for, 18
C 550–81 Measuring Trueness and Squareness of Rigid Block Thermal Insulation, Practice for, 18
C 551–78 Asbestos-Cement Fiberboard Insulating Panels, Spec. for, 16
C 552–79 Cellular Glass Block and Pipe Thermal Insulation, Spec. for, 17, 18
C 553–70(1977) Mineral Fiber Blanket and Felt Insulation (Industrial Type), Spec. for, 18
C 554–77 Crazing Resistance of Fired Glazed Ceramic Whitewares by a Thermal Shock Method, Test for, 17
C 555 Discontinued—Replaced by C 738
C 556–81 Resistance of Overglaze Decorations to Attack by Detergents, Test for, 17
C 557–73(1978) Adhesives for Fastening Gypsum Wallboard to Wood Framing, Spec. for, 13, 22
C 558 Discontinued
C 559–79 Bulk Density by Physical Measurement of Manufactured Carbon and Graphite Articles, Test for, 17
C 560–77 Graphite, Chemical Analysis of, 17
C 561–69(1979) Ash in Graphite, Test for, 17
C 562–69(1979) Moisture in Graphite, Test for, 17
C 563–79 Optimum SO_3 in Portland Cement, Test for, 13
C 564–70(1982) Rubber Gaskets for Cast Iron Soil Pipe and Fittings, Spec. for, 2, 18, 38
C 565–78 Methods of Tension Testing of Carbon and Graphite Mechanical Materials, 17
C 566–78 Total Moisture Content of Aggregate by Drying, Test for, 14
C 567–80 Unit Weight of Structural Lightweight Concrete, Test for, 14
C 568–79 Limestone Building Stone, Spec. for, 19
C 569–68(1975) Indentation Hardness of Preformed Thermal Insulations, Test for, 18
C 570–72(1978) Oil- and Resin-Base Caulking Compound for Building Construction, Spec. for, 18
C 571–81 Carbon and Carbon-Ceramic Refractories, Chemical Analysis of, 17
C 572–81 Chrome-Containing Refractories and Chrome Ore, Chemical Analysis of, 17
C 573–81 Fireclay and High-Alumina Refractories, Chemical Analysis of, 17
C 574–71(1977) Magnesite and Dolomite Refractories, Chemical Analysis of, 17
C 575–81 Silica Refractories, Chemical Analysis of, 17
C 576–81 Zircon Refractories, Chemical Analysis of, 17
C 577–68(1978) Permeability of Refractories, Test for, 17
C 578–69 Preformed, Block-Type Cellular Polystyrene Thermal Insulation, Spec. for, 18
C 579–75 Compressive Strength of Chemical-Resistant Mortars and Monolithic Surfacings, Test for, 16
C 580–74(1978) Flexural Strength and Modulus of Elasticity of Chemical-Resistant Mortars, Grouts, and Monolithic Surfacings, Test for, 16
C 581–74(1978) Chemical Resistance of Thermosetting Resins Used in Glass Fiber Reinforced Structures, Test for, 34, 35
C 582–68(1974) Reinforced Plastic Laminates for Self-Supporting Structures for Use in a Chemical Environment, Spec. for, 34
C 583–80 Modulus of Rupture of Refractory Materials at Elevated Temperatures, Test for, 17
C 584–81 60-deg Specular Gloss of Glazed Ceramic Whitewares and Related Products, Test for, 17
C 585–76(1982) Inner and Outer Diameters of Rigid Thermal Insulation for Nominal Sizes of Pipe and Tubing (NPS System), Rec. Practice for, 18
C 586–69(1981) Potential Alkali Reactivity of Carbonate Rocks for Concrete Aggregates (Rock Cylinder Method), Test for, 14
C 587–68(1978) Gypsum Veneer Plaster, Spec. for, 13
C 588–80 Gypsum Base for Veneer Plasters, Spec. for, 13
C 589–68(1975) Apparent Impact Strength of Preformed Block-Type Insulating Materials, Test for, 18
C 590–75(1979) Action on Substrates by Coatings, Adhesives, and Joint Sealants Used on or with Thermal Insulations, Test for, 18
C 591–69 Rigid Preformed Cellular Urethane Thermal Insulation, Spec. for, 18
C 592–80 Mineral Fiber Blanket Insulation and Blanket-Type Pipe Insulation (Metal-Mesh Covered) (Industrial Type), Spec. for, 18
C 593–76a(1981) Fly Ash and Other Pozzolans for Use with Lime, Spec. for, 13
C 594 Discontinued—Replaced by C 425
C 595–82 Blended Hydraulic Cements, Spec. for, 13, 14
C 596–82 Drying Shrinkage of Mortar Containing Portland Cement, Measuring the, 13
C 597–71(1979) Pulse Velocity Through Concrete, Test for, 14
C 598–72(1978) Annealing Point and Strain Point of Glass by Beam Bending, Test for, 17
C 599–70(1977) Process Glass Pipe and Fittings, Spec. for, 17
C 600–70(1977) Thermal Shock Test on Glass Pipe, 17
C 601–70(1977) Pressure Test on Glass Pipe, 17
C 602–69(1980) Agricultural Liming Materials, Spec. for, 13
C 603–82 Extrusion Rate and Application Life of Elastomeric Sealants, Test for, 18
C 604–79 True Specific Gravity of Refractory Materials by Gas-Comparison Pycnometer, Test for, 17
C 605–72(1977) Reheat Change of Fireclay Nozzles and Sleeves, Test for, 17
C 606–70(1976) Lap-joint Strength of Refractory Mortar at Elevated Temperatures, Test for, 17
C 607–67(1977) Modulus of Rupture of Coked Pitch-Bearing Brick and Shapes, Test for, 17
C 608–71(1977) Brittle Ring Tensile Strength of Chemically Setting Silicate and Silica Chemical-Resistant Mortars, Test for, 16
C 609–81 Small Color Differences Between Ceramic Wall or Floor Tile, Measurement of, 17
C 610–67(1974) Expanded Perlite Block and Pipe Thermal Insulation, Spec. for, 18
C 611–69(1976) Electrical Resistivity of Manufactured Carbon and Graphite Articles at Room Temperature, Test for, 17
C 612–77 Mineral Fiber Block and Board Thermal Insulation, Spec. for, 18
C 613–67(1980) Resin Content of Carbon and Graphite Prepregs by Solvent Extraction, Test for, 36
C 614–74(1980) Alkali Resistance of Porcelain Enamels, Test for, 17
C 615–80 Granite Building Stone, Spec. for, 19
C 616–80 Sandstone Building Stone, Spec. for, 19
C 617–76 Capping Cylindrical Concrete Specimens, 14
C 618–80 Fly Ash and Raw or Calcined Natural Pozzolan for Use as a Mineral Admixture in Portland Cement Concrete, Spec. for, 14
C 619 Discontinued
C 620–70(1976) Hydration Resistance of Pitch-Bearing Basic Refractory Brick, Test for, 17
C 621–68(1978) Static Test for Corrosion Resistance of Refractories to Molten Glass, 17
C 622–68(1978) Simulated Service Test for Corrosion Resistance of Refractories to Molten Glass, 17
C 623–71(1981) Young's Modulus, Shear Modulus, and Poisson's Ratio for Glass and Glass-Ceramics by Resonance, Test for, 17
C 624 Discontinued

Aviation-Turbine Fuels and Aircraft Fuel System Materials, Practice for, 25
D 4055–81 Pentane Insolubles by Membrane Filtration, Test for, 25
D 4056–81 Estimation of Solubility of Water in Hydrocarbon and Aliphatic Ester Lubricants, 25
D 4057–81 Manual Sampling of Petroleum and Petroleum Products, Practice for, 25
D 4058–81 Attrition and Abrasion of Catalysts and Catalyst Carriers, Test for, 25
D 4059–82 Analysis of Polychlorinated Biphenyls in Mineral Insulating Oils by Gas Chromatography, 40
D 4060–81 Abrasion Resistance of Organic Coatings by the Taber Abraser, Test for, 27
D 4061–81 Specific Luminance of Horizontal Coatings, Test for, 27
D 4062–81 Leveling of Paints by Draw-Down Method, Test for, 27
D 4063–81 Electrical Insulating Board (Pressboard), Spec. for, 40
D 4064–81 Preservative Treatment of Utility Poles by the Thermal Process, Practice for, 22
D 4066–81 Nylon Injection and Extrusion Materials, Spec. for, 36
D 4067–81 Reinforced and Filled Polyphenylene Sulfide Injection Molding and Extrusion Materials, Spec. for, 36
D 4068–81 Chlorinated Polyethylene (CPE) Sheeting for Concealed Water Containment Membrane, Spec. for, 34
D 4069–81 Impregnated Activated Carbon Used to Remove Gaseous Radio-Iodines from Gas Streams, Spec. for, 30
D 4070–81 Adhesive-Lubricant for Installation of Preformed Elastomeric Bridge Compression Seals in Concrete Structures, Spec. for, 15
D 4071–81 Use of Portland Cement Concrete Bridge Deck Waterproof Membrane Systems, Practice for, 15
D 4072–81 Toluene-Insoluble (TI) Content of Tar and Pitch, Test for, 15
D 4073–81 Tensile-Tear Strength of Bituminous Roofing Membranes, 15
D 4074–81 Bitumen and Aggregate Content of Bitumen-Aggregate Mixtures from Built-Up Roofing Samples, Test for, 15
D 4075–81 Compounding Materials—Flame Atomic Absorption Technique—Determination of Metals, Test for, 37
D 4076–81 o-Xylene 950, Spec. for, 29
D 4077–81 Isoprooxylbenzene (Cumene), Spec. for, 29
D 4078–81 Water Emulsion Floor Finish, Spec. for, 30
D 4079–81 Vapor-Degreasing Grade Methylene Chloride, Spec. for, 30
D 4080–81 Vapor-Degreasing Grade Trichloroethylene, Spec. for, 30
D 4081–82 Drycleaning Grade Perchloroethylene, Spec. for, 30
D 4084–82 Hydrogen Sulfide in Gaseous Fuels (Lead Acetate Reaction Rate Method), Analysis of, 26
D 4085–81 Metals in Cellulose by Atomic Adsorption Spectrophotometry, Test for, 21
D 4087–82 Pipeline Quality Natural Gas, Spec. for, 26
D 4088–82 Preparation for Shipment of Solid Electrical Insulating Materials, Practice for, 39
D 4089–82 Heavy Duty Chlorinated Polyethylene (CPE) Jacket for Wire and Cable, Spec. for, 40
D 4090–82 General-Purpose Chlorinated Polyethylene (CPE) Jacket for Wire and Cable, Spec. for, 40
D 4091–82 Extra-Heavy-Duty Black Chlorinated Polyethylene (CPE) Jacket for Wire and Cable, Spec. for, 40
D 4092–82 Dynamic Mechanical Measurements on Plastics, Def. and Description of Terms Relating to, 35
D 4093–82 Photoelastic Measurements of Birefringence and Residual Strains in Transparent or Translucent Plastic Materials, 35
D 4094–82 Acid Content of Ethylene-Acrylic Acid Copolymer, Test for, 35
D 4095–82 Use of The Refractometer for Determining Nonvolatile Matter (Total-Solids) in Floor Polishes, Practice for, 30
D 4096–82 Application of Hi-Vol (High-Volume) Sampler Method for Collection and Mass Determination of Airborne Particulate Matter, Practice for, 26
D 4098–82 Evaluating High-Density Rigid Cellular Thermosets, Practice for, 36
D 4099–82 Poly(Vinyl Chloride) (PVC) Prime Windows, Spec. for, 36
D 4101–82 Propylene Plastic Injection and Extrusion Materials, Spec. for, 36
D 4102–82 Thermal Oxidate Resistance of Carbon Fibers, Test for, 36
D 4103–82 Preparation of Substrate Surfaces for Coefficient of Friction Testing, Practice for, 30
D 4108–82 Thermal Protective Performance of Materials for Clothing by Open-Flame Method, Test for, 32
D 4109–82 Mens' and Boys' Woven Coverall, Dungaree, Overall, and Shop Coat Fabrics, Performance Spec. for, 32
D 4110–82 Men's and Boys' Knitted Bathrobe, Dressing Gown, and Pajama Fabrics, Performance Spec. for, 32
D 4111–82 Woven Napery and Tablecloth Fabrics: Household and Institutional, Performance Spec. for, 32
D 4112–82 Woven Umbrella Fabrics, Performance Spec. for, 32
D 4113–82 Woven Slipcover Fabrics, Performance Spec. for, 32
D 4114–82 Woven Flat Lining Fabrics for Women's and Girls' Apparel, Performance Spec. for, 32
D 4115–82 Women's and Girls' Knitted and Woven Dress Glove Fabrics, Performance Spec. for, 32
D 4116–82 Women's and Girls' Knitted and Woven Corset Girdle-Combination Fabrics, Performance Spec. for, 32
D 4117–82 Women's and Girls' Woven Robe, Negligee, Nightgown, Pajama, Slip, and Lingerie Fabrics, Performance Spec. for, 32
D 4118–82 Women's Woven Coverall, Dungaree, Overall, and Shop Coat Fabrics, Performance Spec. for, 32
D 4119–82 Men's and Boys' Knitted Dress Shirt Fabrics, Performance Spec. for, 32
D 4120–82 Fiber Cohesion in Roving, Sliver, and Top (Dynamic Tests), Test for, 33
D 4121–82 Photographic Documentation of Coating and Lining Failures and Defects, Practice for, 45
D 4138–82 Dry Film Thickness of Protective Coating Systems by Destructive Means, Measurement of, 45
D 4150–82 Gaseous Fuels, Terminology Relating to, 26
D 4151–82 Flammability of Blankets, Test for, 32
D 4154–82 Men's and Boys' Knitted and Woven Beachwear and Sports Shirts, Performance Spec. for, 32
D 4155–82 Women's and Girls' Woven Sportswear, Shorts, Slacks, and Suiting Fabrics, Spec. for, 32
D 4156–82 Women's and Girls' Knitted Sportswear Fabrics, Spec. for, 32
D 4157–82 Abrasion Resistance of Textile Fabrics (Oscillatory Cylinder Method), Test for, 32
D 4158–82 Abrasion Resistance of Textile Fabrics (Uniform Abrasion Method), Test for, 32
D 4159–82 Resistance to Yarn Slippage in Woven Upholstery Fabrics—Plain, Tufted, or Flocked (Using a Simulated Seam), Test for, 32
D 4164–82 Mechanically Tapped Apparent Packing Density of Formed Catalyst Particles, Test for, 25
D 4170–82 Fretting Wear Protection by Lubricating Greases, Test for, 25
D 4171–82 Fuel System Icing Inhibitors, Spec. for, 25
D 4174–82 Cleaning, Flushing, and Purification of Petroleum Fluid Hydraulic Systems, Practice for, 25
D 4176–82 Free Water and Particulate Contamination in Distillate Fuels (Clear and Bright Pass/Fail Proceedings, Test for, 25
D 4179–82 Single Pellet Crush Strength of Formed Catalyst Shapes, Test for, 25
D 4180–82 Vibrated Apparent Packing Density of Formed Catalyst Particles, Test for, 25

E. MISCELLANEOUS SUBJECTS

E 1–80 ASTM Thermometers, Spec. for, 25, 44
E 2–62(1974) Micrographs of Metals and Alloys, Preparation of, (Including Recommended Practice for Photography as Applied to Metallography), 11
E 3–80 Metallographic Specimens, Preparation of, 11
E 4–82 Load Verification of Testing Machines 10, 14, 32, 35, 41
E 5 Discontinued—Replaced by E 3
E 6–81 Methods of Mechanical Testing, Def. of Terms Relating to, 10, 35
E 7–80 Metallography, Def. of Terms Relating to, 11
E 8–81 Tension Testing of Metallic Materials, 6, 7, 10
E 9–81 Compression Testing of Metallic Materials at Room Temperature, 10
E 10–78 Brinell Hardness of Metallic Materials, Test for, 10
E 11–81 Wire-Cloth Sieves for Testing Purposes, Spec. for, 13, 14, 15, 18, 26, 30, 41
E 12–70(1981) Density and Specific Gravity of Solids, Liquids, and Gases, Def. of Terms Relating to, 14, 30
E 13 Discontinued
E 14–63(1975) Thermal Analysis of Metals and Alloys, Rec. Practice for, 11, 41
E 15 Discontinued
E 16 Discontinued
E 17 Discontinued—Replaced by E 11
E 18–79 Rockwell Hardness and Rockwell Superficial Hardness of Metallic Materials, Tests for, 10
E 19 Discontinued—Replaced by E 112
E 20–68(1974) Particle-Size Distribution of Particulate Substances of Subsieve Sizes, Rec. Practice for Analysis by Microscopical Methods for, 41
E 21–79 Elevated Temperature Tension Tests of Metallic Materials, Rec. Practice for, 10
E 22 Discontinued—Replaced by E 139
E 23–82 Notched Bar Impact Testing of Metallic Materials, 10
E 24 Discontinued
E 25 Discontinued
E 26 Discontinued—Replaced by E 27
E 27–64(1981) Zinc and Zinc Alloys by the Solution-Residue Technique, Spectrographic Analysis of, 42
E 28–67(1977) Softening Point by Ring-and-Ball Apparatus, Test for, 29, 41
E 29–67(1980) Indicating Which Places of Figures Are to Be Considered Significant in Specified Limiting Values, Rec. Practice for, 10, 11, 12, 35, 39, 41
E 30–77(1980) Steel, Cast Iron, Open-Hearth Iron, and Wrought Iron, Chemical Analysis of, 12
E 31–75(1979) Ferroalloys, Chemical Analysis of, 12
E 32–42(1978) Ferroalloys for Determination of Chemical Composition, Sampling, 12
E 33 Discontinued—Replaced by E 140
E 34–81a Aluminum and Aluminum Alloys, Chemical Analysis of, 12
E 35–63(1980) Magnesium and Magnesium Alloys, Chemical Analysis of, 12
E 36 Discontinued—Replaced by E 478
E 37–76(1980) Pig Lead, Chemical Analysis of, 12
E 38–76a(1980) Nickel-Chromium and Nickel-Chromium-Iron Alloys, Chemical Analysis of, 12
E 39–75(1980) Nickel, Chemical Analysis of, 12
E 40–77 Slab Zinc (Spelter), Chemical Analysis of, 12
E 41–79 Conditioning, Def. of Terms Relating to, 35, 41
E 42 Redesignated G 23
E 43 Discontinued
E 44–80 Heat Treatment of Metals, Def. of Terms Relating to, 2, 11
E 45–81 Inclusion Content of Steel, Rec. Practice for Determining the, 11
E 46–66(1978) Lead- and Tin-Base Solder, Chemical Analysis of, 12
E 47–77 Zinc Die-Casting Alloys, Chemical Analysis of, 12
E 48 Discontinued—Replaced by E 140
E 49 Discontinued
E 50–75 Apparatus, Reagents, and Safety Precautions for Chemical Analysis of Metals, Rec. Practices for, 12
E 51–67(1978) Tin Alloys by the Powder Technique, Spectrographic Analysis of, 42
E 52 Discontinued
E 53–48(1978) Copper (Electrolytic Determination of Copper), Chemical Analysis of, 12
E 54–80 Special Brasses and Bronzes, Chemical Analysis of, 12
E 55–48(1978) Wrought Nonferrous Metals and Alloys for Determination of Chemical Composition, Sampling, 6, 7, 12
E 56–63(1978) Silver Brazing Alloys, Chemical Analysis of, 12
E 57–60(1978) White Metal Bearing Alloys, Chemical Analysis of, 12
E 58 Discontinued—Combined with E 37
E 59–78 Steel and Iron for Determination of Chemical Composition, Sampling, 12
E 60–80 Photometric Methods for Chemical Analysis of Metals, Rec. Practice for, 12
E 61 Redesignated E 35
E 62–76(1980) Copper and Copper Alloys, Photometric Methods for Chemical Analysis of, 12
E 63 Discontinued—Combined with E 75
E 64 Discontinued—Combined with E 40
E 65 Discontinued
E 66 Discontinued—Combined with A 146
E 67 Discontinued—Replaced by E 87
E 68 Discontinued
E 69–80 Combustible Properties of Treated Wood by the Fire-Tube Apparatus, Test for, 18
E 70–77 pH of Aqueous Solutions with the Glass Electrode, Test for, 22, 30, 41
E 71 Discontinued—Replaced by E 446
E 72–80 Strength Tests of Panels for Building Construction, Conducting, 18
E 73–74 Truss Assemblies, Testing, 18
E 74–81 Force-Measuring Instruments for Verifying the Load Indication of Testing Machines, Calibration of, 10, 41
E 75–76(1980) Copper-Nickel and Copper-Nickel-Zinc Alloys, Chemical Analysis of, 12
E 76–56(1978) Nickel-Copper Alloys, Chemical Analysis of, 12
E 77–74(1980) Verification and Calibration of Liquid-in-Glass Thermometers, 44
E 78 Discontinued—Combined with E 9
E 79 Discontinued—Replaced by E 112
E 80–63(1975) Dilatometric Analysis of Metallic Materials, Rec. Practice for, 11, 41, 43
E 81–77(1982) Quantitative Pole Figures of Metals, Preparing, 11
E 82–63(1979) Orientation of a Metal Crystal, Determining the, 11
E 83–67(1980) Verification and Classification of Extensometers, 10, 41
E 84–81a Surface Burning Characteristics of Building Materials, Test for, 18
E 85 Discontinued—Replaced by E 139
E 86–57(1978) Antimony, Chemical Analysis of, 12
E 87–58(1978) Lead, Tin, Antimony, and Their Alloys, Photometric Methods for Chemical Analysis of, 12
E 88–58(1978) Nonferrous Metals and Alloys in Cast Form for Determination of Chemical Composition, Sampling, 6, 7, 12
E 89 Discontinued—Replaced by E 112
E 90–81 Airborne-Sound Transmission Loss of Building Partitions, Laboratory Measurement of, 18
E 91 Discontinued—Replaced by E 112
E 92–72(1977) Vickers Hardness of Metallic Materials, Test for, 10
E 93 Discontinued—Replaced by E 140
E 94–77 Radiographic Testing, Rec. Practice for, 11
E 95–68(1981) Cell-Type Oven with Controlled Rates of Ventilation, Spec. for, 39, 40, 41
E 96–80 Water Vapor Transmission of Materials, Tests for, 20, 21, 35, 41
E 97–77 45-deg, 0-deg Directional Reflectance Factor of Opaque Specimens by Broad-Band Filter Reflectometry, Test for, 17, 20, 27, 46
E 98 Discontinued—Replaced by E 155
E 99 Discontinued—Replaced by E 390
E 100–81 ASTM Hydrometers, Spec. for, 25, 41, 44
E 101–67(1978) Aluminum and Aluminum Alloys by the Point-to-Plane Technique, Spectrographic Analysis of, 42
E 102–81 Saybolt Furol Viscosity of Bituminous Materials at High Temperatures, Test for, 15
E 103–61(1979) Rapid Indentation Hardness Testing of Metallic Materials, 7, 10
E 104–51(1971) Constant Relative Humidity by Means of Aqueous Solutions, Rec. Practice for Maintaining, 26, 35,

Fittings, Spec. for, **34**

F 679–80 Poly(Vinyl Chloride) (PVC) Large-Diameter Plastic Gravity Sewer Pipe and Fittings, Spec. for, **34**

F 680–80 Nails, Testing, **4**

F 681–80 Use of Branch Connections, Practice for, **46**

F 682–82 Wrought Carbon Steel Sleeve-Type Pipe Couplings, Spec. for, **46**

F 683–80 Selection and Application of Thermal Insulation for Piping and Machinery, Practice for, **46**

F 684 Not yet assigned

F 685–80 Toner Usage, Efficiency, and Dusting in Copiers Using Single-Component Toner Systems, Practice for Determining, **20**

F 686–80 Evaluation of Image Quality Produced by a Carbonless Copy Paper with an Electric Typewriter, Practice for, **20**

F 687–80 On-Site Calibration of Liquid-borne Automatic Particle Counters with Adjustable Individual Size Thresholds, Practice for, **25**

F 688–80 Wrought Cobalt-Nickel-Chromium-Molybdenum Alloy Plates, Sheet, and Foil for Surgical Implants, Spec. for, **46**

F 689–80 Determination of the Temperature of Above-Ground Plastic Gas Pressure Pipe Within Metallic Casings, Practice for, **34**

F 690–80 Underground Installation of Thermoplastic Pressure Piping Irrigation Systems, Practice for, **34**

F 691–80 Preparing Photoplates for Measuring Flatness Deviation, Practice for, **43**

F 692–80 Adhesion Strength of Solderable Films to Substrates, Measuring, **43**

F 693–80 Sealing Seams of Resilient Sheet Floor Products by Use of Liquid Seam Sealers, Practice for, **46**

F 694–80 Heel Attaching Strength of Women's Shoes, Test for, **46**

F 695–80 Evaluation of Test Data Obtained by Using the Horizontal Pull Slipmeter (HPS) or the James Machine for Measurement of Static Slip Resistance of Footwear Sole, Heel, or Related Materials, Practice for, **46**

F 696–80 Leather Protectors for Rubber Insulating Gloves and Mittens, Spec. for, **40**

F 697–80 Care and Use of Mouthguards, Practice for, **46**

F 698–81 Physical Information to Be Provided for Amusement Rides and Devices, Spec. for, **46**

F 699–81 Accelerated Conditioning of Polybutylene Pipe and Tubing for Subsequent Quality Control Testing, Practice for, **34**

F 700–81 Care and Handling of Intracranial Aneurysm Clips and Instruments, Practice for, **46**

F 701–81 Care and Handling of Neurosurgical Implants and Instruments, Practice for, **46**

F 702–81 Polysulfone Resin for Medical Applications, Spec. for, **46**

F 703–81 Implantable Breast Prostheses, Spec. for, **46**

F 704–81 Selecting Bolting Lengths for Piping System Flanged Joints, Practice for, **46**

F 705 Not yet assigned

F 706–81 Fusion Temperature of Dry Electrostatic Heat Fixing Toners, Practice for Determination of, **20**

F 707–81 Modular Gage Boards, Spec. for, **46**

F 708–81 Design and Installation of Rigid Pipe Hangers, Practice for, **46**

F 709–81 Gasket—Asbestos Metallic Cloth Material, Spec. for, **38**

F 710–81 Preparing Concrete Floors and Other Monolithic Floors to Receive Resilient Flooring, Practice for, **46**

F 711–81 Fiberglass-Reinforced Plastic (FRP) Rod and Tube Used in Live Line Tools, Spec. for, **40**

F 712–81 Electrically Insulating Plastic Guard Equipment for Protection of Workers, Testing, **10**

F 713 Not yet assigned

F 714–81 Polyethylene (PE) Plastic Pipe (SDR-PR) Based on Outside Diameter, Spec. for, **34**

F 715–81 Spill Control Barrier Membrane Materials, Testing, **46**

F 716–82 Sorbent Performance—Absorbents, Testing, **46**

F 717–81 Football Helmets, Spec. for, **46**

F 718–81 Shipbuilders and Marine Paints and Coatings Products/Procedure Data Sheet, Standard for, **46**

F 719–81 Biomaterials in Rabbits for Primary Skin Irritation, Practice for Testing, **46**

F 720–81 Guinea Pigs for Contact Allergens: Guinea Pig Maximization Test, Practice for Testing, **46**

F 721–81 Gage Piping Assemblies, Spec. for, **46**

F 722–81 Welded Joints for Shipboard Piping Systems, Spec. for, **46**

F 723–81 Conversion Between Resistivity and Dopant Density for Boron-Doped and Phosphorus-Doped Silicon, Practice for, **43**

F 724–81 Outdoor Evaluation of Tire Sidewall Component Cracking Resistance, Practice for, **38**

F 725–81 Drifting Impact Test Requirements in Thermoplastic Pipe and Fittings Standards, Practice for, **34**

F 726–81 Sorbent Performance of Adsorbents, Testing, **46**

F 727–81 Transmittance of See-Through Photoplate, Measurement of, **43**

F 728–81 Optical Microscope for Dimensional Measurements, Practice for, Preparation of an, **43**

F 729–81 Temperature Coefficient of Resistance of Film Resistors, Tests for, **43**

F 730–81 Hermeticity of Electron Devices by a Weight-Gain Test, Tests for, **43**

F 731–81 Expanded PTFE Cord-Type Gasket Material, Spec. for, **38**

F 732–82 Reciprocating Pin on Flat Evaluation of Friction and Wear Properties of Polymeric Materials for Use in Total Joint Prostheses, Practice for, **46**

F 733–81 Optical Distortion and Deviation of Transparent Parts Using the Double-Exposure Method, Test for, **25**

F 734–81 Shear Strength of Fusion-Bonded Polycarbonate Aerospace Glazing Material, Test for, **25**

F 735–81 Abrasion Resistance of Transparent Plastics and Coatings Using the Oscillating Sand Method, Practice for, **25**

F 736–81 Impact Resistance of Monolithic Polycarbonate Sheet by Means of a Falling Weight, Test for, **25**

F 737–81 Ice Hockey Skate Blades, Performance Spec. for, **46**

F 738–81 Stainless Steel Metric Bolts, Screws, and Studs, Spec. for, **4**

F 739–81 Resistance of Protective Clothing Materials to Permeation by Hazardous Liquid Chemicals, Test for, **46**

F 740–81 Filtration, Def. of Terms Relating to, **46**

F 741–81 Crystallographic Axes and Contrast Ratio of a Pockels Cell Electro-Optic Crystal Operating in the Longitudinal Mode, Determining the, **43**

F 742–81 Evaluating an Interferometer, Practice for, **43**

F 743–81 Contrast Ratio of a Pair of Linear Polarizers for Visible Radiation, Measuring, **43**

F 744–81 Dose Rate Threshold for Upset of Digital Integrated Circuits, Measuring, **43**

F 745–81 Stainless Steel for Cast and Solution Annealed Surgical Implant Applications, Spec. for, **46**

F 746–81 Pitting or Crevice Corrosion of Metallic Surgical Materials, Test for, **10, 46**

F 747–81 Amusement Rides and Devices, Def. of Terms Relating to, **46**

F 748–82 Selecting Generic Biological Test Methods for Materials and Devices, Practice for, **46**

F 749–82 Evaluating Material Extracts by Intracutaneous Injection in the Rabbit, Practice for, **46**

F 750–82 Evaluating Material Extracts by Systemic Injection in the Mouse, Practice for, **46**

F 752–82 Effective Series Resistance (ESR) and Capitance of Multilayer Ceramic Capacitors at High Frequencies, Test for, **43**

F 753–82 Brassieres, Classification of, **46**

F 754–82 Implantable Polytetrafluoroethylene (PTFE) Polymer Fabricated in Sheet, Tube, and Rod Shapes, Spec. for, **46**

F 755–82 Selection of Porous Polyethylene for Use in Surgical Implants, Spec. for, **46**

F 756–82 Assessment of the Hemolytic Properties of Materials, Practice for, **46**

F 759–82 Hot Chocolate Beverage Dispensers, Spec. for, **46**

F 760–82 Food Service Equipment Manuals, Spec. for, **46**

F 762–82 Change in Groove (or Void) Depth with Distance Traveled for Passenger Car Tires, Practice for Determining, **38**

F 763–82 Short-Term Screening of Implant Materials, Practice for, **46**

F 764–82 Compatibility of Materials with High-Energy Propellants (Impact Sensitivity Threshold Technique), Practice for, **25**

F 765–82 Wildcats, Ship Anchor Chain, Spec. for, **46**

F 768–82 Specular Reflectance and Transmittance Measurements of Optically Flat-Coated and Non-Coated Specimens, **43**

F 769–82 Transistor and Diode Leakage Currents, Measuring, **43**

F 772–82 Noise Quality of Film-Type Resistors, Test for, **43**

F 773–82 Dose Rate Response of Linear Integrated Circuits, Measuring, **43**

F 774–82 Latchup Susceptibility in Bipolar Integrated Circuits, Guide for Analysis of, **43**

F 775–82 Water and Substrate Surface Topography by Interferometric, Non-Contract Technique, Test for, **43**

F 776–82 Resistance of Materials to Horizontal Flame Propagation (for Aerospace Vehicles, Standard Conditions), Test for, **25**

F 777–82 Resistance of Electrical Wire Insulation Materials to Flame at 60°, Test for, **25**

F 790–82 Materials for Aerospace Plastic Transparent Enclosures, Testing, **25**

F 791–82 Stress Crazing of Transparent Plastics, Practice for, **25**

EXHIBIT 11

1983 Annual Book of ASTM Standards

Index

Water, **11.01**
D 513–82 Test Methods for Carbon Dioxide and Bicarbonate and Carbonate Ions in Water, **11.01**
D 514–80 Test Method for Hydroxide Ion in Water, **11.01**
D 515–82 Test Methods for Phosphorus in Water, **11.01**
D 516–82 Test Methods for Sulfate Ion in Water, **11.01**
D 517–70(1981) Specification for Asphalt Plank, **04.03**
D 518–83 Test Method for Rubber Deterioration—Surface Cracking, **09.01**
D 519–78(1983) Test Method for Length of Fiber in Wool Top, **07.02**
D 520–82 Specification for Zinc Dust (Metallic Zinc Powder) Pigment, **06.02**
D 521–81 Chemical Analysis of Zinc Dust (Metallic Zinc Powder), **06.02**
D 522–60(1979) Test Method for Elongation of Attached Organic Coatings with Conical Mandrel Apparatus, **06.01**
D 523–80 Test Method for Specular Gloss, **06.01, 08.01**
D 524–81 Test Method for Ramsbottom Carbon Residue of Petroleum Products, **05.01**
D 525–80 Test Method for Oxidation Stability of Gasoline (Induction Period Method), **05.01**
D 526 Discontinued
D 527 Discontinued
D 528–76 Test Method for Machine Direction of Paper and Paperboard, **15.09**
D 529–82 Recommended Practice for Accelerated Weathering Test of Bituminous Materials, **04.04**
D 530–81 Testing Hard Rubber Products, **09.01**
D 531–83 Test Method for Rubber Property—Pusey & Jones Indentation, **09.01**
D 532–73(1978) Specification for Natural Rubber Jacket for Wire and Cable, **10.02**
D 533–60(1979) Specification for Built Soap, Powdered, **15.04**
D 534–74(1979) Specification for Alkaline Soap Powder, **15.04**
D 535 Discontinued
D 536 Discontinued
D 537–57(1980) Specification for Sodium Metasilicate, **15.04**
D 538–60(1980) Specification for Trisodium Phosphate, **15.04**
D 539 Discontinued
D 540 Discontinued
D 541–79a Specification for Single Jute Yarn, **07.02**
D 542–50(1977) Test Methods for Index of Refraction of Transparent Organic Plastics, **08.01**
D 543–67(1978) Test Method for Resistance of Plastics to Chemical Reagents, **08.01**
D 544 Discontinued—Replaced by D 1751, D 1752
D 545–77(1982) Testing Preformed Expansion Joint Fillers for Concrete (Nonextruding and Resilient Types), **04.02, 04.03**
D 546–78 Sieve Analysis of Mineral Filler for Road and Paving Materials, **04.03, 04.08**
D 547–41(1980) Test Method for Index of Dustiness of Coal and Coke, **05.05**
D 548 Discontinued
D 549–74(1982) Test Methods for Rosin in Paper and Paperboard, **15.09**
D 550 Discontinued
D 551 Discontinued
D 552 Discontinued—Replaced by D 1055, D 1056
D 553 Discontinued—Replaced by D 1084
D 554 Discontinued
D 555–78 Testing Drying Oils, **06.03**
D 556 Discontinued—Replaced by D 1241
D 557 Discontinued—Replaced by D 1241
D 558–82 Test Method for Moisture-Density Relations of Soil-Cement Mixtures, **04.08**
D 559–82 Wetting-and-Drying Tests of Compacted Soil-Cement Mixtures, **04.08**
D 560–82 Freezing-and-Thawing Tests of Compacted Soil-Cement Mixtures, **04.08**
D 561–82 Specification for Carbon Black Pigment for Paint, **06.02**
D 562–81 Test Method for Consistency of Paints Using the Stormer Viscometer, **06.01**
D 563–80 Test Method for Phthalic Anhydride Content of Alkyd Resins and Resin Solutions, **06.02**
D 564–81 Testing Liquid Paint Driers, **06.03**
D 565–45(1979) Test Method for Carbonizable Substances in White Mineral Oil (Liquid Petrolatum), **05.01**
D 566–76(1982) Test Method for Dropping Point of Lubricating Grease, **05.01**
D 567 Discontinued—Replaced by D 2270
D 568–77 Test Method for Rate of Burning and/or Extent and Time of Burning of Flexible Plastics in a Vertical Position, **08.01**
D 569–82 Measuring the Flow Properties of Thermoplastic Molding Materials, **08.01**
D 570–81 Test Method for Water Absorption of Plastics, **08.01**
D 571 Discontinued
D 572–81 Test Method for Rubber Deterioration by Heat and Oxygen, **09.01**
D 573–81 Test Method for Rubber—Deterioration in an Air Oven, **09.01**
D 574–79 Specification for Ozone-Resisting Insulation for Wire and Cable, **10.02**
D 575–83 Test Methods for Rubber Properties in Compression, **09.01**
D 576 Discontinued
D 577 Discontinued—Replaced by D 1571
D 578–83 Specification for Glass Fiber Yarns, **07.02**
D 579–83 Specification for Greige Woven Glass Fabrics, **07.02**
D 580–83 Testing and Tolerances for Woven Glass Tapes, **07.02**
D 581–83 Specification for Glass Fiber Greige Braided Tubular Sleeving, **07.02**
D 582 Discontinued
D 583 Discontinued
D 584–77(1983) Test Method for Wool Content of Raw Wool—Laboratory Scale, **07.02**
D 585–74(1982) Sampling and Accepting a Single Lot of Paper, Paperboard, Fiberboard, or Related Product, **15.09**
D 586 Discontinued
D 587 Discontinued
D 588 Discontinued
D 589 Discontinued
D 590–65(1971) Test Method for Petroleum Wax in Paper, **15.09**
D 591 Discontinued
D 592 Discontinued
D 593 Discontinued
D 594–41(1980) Specification for Sodium Sesquisilicate, **15.04**
D 595–45(1980) Specification for Tetrasodium Pyrophosphate (Anhydrous), **15.04**
D 596–69(1980) Reporting Results of Analysis of Water, **11.01**
D 597 Discontinued—Replaced by D 2028
D 598 Discontinued—Replaced by D 2027
D 599 Discontinued
D 600–80 Specification for Liquid Paint Driers, **06.03**
D 601–55(1981) Specification for Oiticica Oil (Permanently Liquid), **06.03**
D 602–81 Specification for Barium Sulfate Pigments, **06.02**
D 603–66(1979) Specification for Aluminum Silicate Pigments (Hydrous), **06.02**
D 604–81 Specification for Diatomaceous Silica Pigment, **06.02**
D 605–82 Specification for Magnesium Silicate Pigment (Talc), **06.02**
D 606 Discontinued
D 607–82 Specification for Wet Ground Mica Pigment, **06.02**
D 608–80 Specification for Dibutyl Phthalate, **06.03**
D 609–73(1980) Preparation of Steel Panels for Testing Paint, Varnish, Lacquer, and Related Products, **06.01**
D 610–68(1981) Evaluating Degree of Rusting on Painted Steel Surfaces, **06.01**
D 611–82 Test Method for Aniline Point and Mixed Aniline Point of Petroleum Products and Hydrocarbon Solvents, **05.01, 06.03, 10.03**
D 612–45(1978) Test Method for Carbonizable Substances in Paraffin Wax, **05.01, 15.09**
D 613–82 Test Method for Ignition Quality of Diesel Fuels by the Cetane Method (Not Available as Separate Reprint), **05.04**
D 614 Discontinued—Replaced by D 2700
D 615 Discontinued
D 616 Discontinued—Replaced by D 709
D 617–80 Test Method for Punching Quality of Phenolic Laminated Sheets, **10.01**
D 618–61(1981) Conditioning Plastics and Electrical Insulating Materials for Testing, **08.01, 10.01, 10.02**
D 619–82 Testing Vulcanized Fibre Used for Electrical Insulation, **10.01**
D 620 Discontinued
D 621–64(1976) Test Methods for Deformation of Plastics Under Load, **08.01**
D 622–81 Testing Rubber Hose for Automotive Air and Vacuum Brake System, **09.02**
D 623–78 Test Methods for Rubber Property—Heat Generation and Flexing Fatigue in Compression, **09.01**
D 624–81 Test Method for Rubber Property—Tear Resistance, **09.01**
D 625 Discontinued
D 626 Discontinued
D 627 Discontinued
D 628–80 Specification for Asbestos Tubular Sleeving, **07.02**
D 629–77 Quantitative Analysis of Textiles, **07.02**
D 630 Discontinued
D 631 Discontinued—Replaced by D 977

D 632–72(1978) Specification for Sodium Chloride, **04.02, 04.03, 04.08**
D 633–74(1980) Volume Correction Table for Road Tar, **04.03**
D 634 Discontinued
D 635–81 Test Method for Rate of Burning and/or Extent and Time of Burning of Self-Supporting Plastics in a Horizontal Position, **08.01**
D 636 Discontinued
D 637–50(1977) Test Method for Surface Irregularities of Flat Transparent Plastic Sheets, **08.01**
D 638–82a Test Method for Tensile Properties of Plastics, **08.01**
D 638M–81 Test Method for Tensile Properties of Plastics [Metric], **08.01**
D 639–81 Testing Battery Containers Made from Hard Rubber or Equivalent Materials, **09.01**
D 640 Discontinued—Replaced by D 1076
D 641 Discontinued—Replaced by D 685
D 642–76 Compression Test for Shipping Containers, **15.09**
D 643 Discontinued
D 644–55(1982) Test Method for Moisture Content of Paper and Paperboard by Oven Drying, **15.09**
D 645 Discontinued
D 646 Discontinued
D 647–68(1981) Recommended Practice for Design of Molds for Test Specimens of Plastic Molding Materials, **08.01**
D 648–82 Test Method for Deflection Temperature of Plastics Under Flexural Load, **08.01**
D 649 Discontinued—Replaced by D 695
D 650 Discontinued—Replaced by D 790
D 651–80 Test Method for Tensile Strength of Molded Electrical Insulating Materials, **10.01**
D 652 Redesignated F 652
D 653–82 Definitions of Terms and Symbols Relating to Soil and Rock Mechanics, **04.08**
D 654 Discontinued
D 655 Discontinued
D 656–81 Specification for Pure Toluidine Red Toner, **06.02**
D 657 Discontinued
D 658–81 Test Method for Abrasion Resistance of Organic Coatings by the Air Blast Abrasion Test, **06.01**
D 659–80 Evaluating Degree of Chalking of Exterior Paints, **06.01**
D 660–44(1981) Evaluating Degree of Checking of Exterior Paints, **06.01**
D 661–44(1981) Evaluating Degree of Cracking of Exterior Paints, **06.01**
D 662–44(1981) Evaluating Degree of Erosion of Exterior Paints, **06.01**
D 663 Discontinued—Replaced by D 974
D 664–81 Test Method for Neutralization Number by Potentiometric Titration, **05.01, 10.03**
D 665–82 Test Method for Rust-Preventing Characteristics of Inhibited Mineral Oil in the Presence of Water, **05.01**
D 666 Discontinued—Replaced by D 2161
D 667 Discontinued—Combined with D 116
D 668–79 Measuring Dimensions of Rigid Rods and Tubes Used for Electrical Insulation, **10.01**
D 669–82 Test Method for Dissipation Factor and Permittivity Parallel with Laminations of Laminated Sheet and Plate Materials, **10.01**
D 670 Discontinued—Replaced by D 1313
D 671–71(1978) Test Method for Flexural Fatigue of Plastics by Constant-Amplitude-of-Force, **08.01**
D 672 Discontinued—Replaced by D 791
D 673–70(1982) Test Method for Mar Resistance of Plastics, **08.01**
D 674 Discontinued—Replaced by D 2990 and D 2991
D 675 Discontinued—Combined with D 883
D 676 Discontinued—Replaced by D 2240
D 677 Discontinued—Replaced by D 1571
D 678 Discontinued
D 679 Discontinued—Replaced by D 2514
D 680 Discontinued—Replaced by D 2514
D 681–81 Specification for Jute Rove and Plied Yarn for Electrical and Packing Purposes, **07.02**
D 682 Discontinued
D 683 Discontinued
D 684 Discontinued
D 685–73(1980) Conditioning Paper and Paper Products for Testing, **15.09**
D 686–76(1982) Qualitative Examination of Mineral Filler and Mineral Coating of Paper, **15.09**
D 687 Discontinued
D 688 Discontinued
D 689–79 Test Method for Internal Tearing Resistance of Paper, **15.09**
D 690 Discontinued
D 691 Discontinued
D 692–79 Specification for Coarse Aggregate for Bituminous Paving Mixtures, **04.03, 04.08**
D 693–77 Specification for Crushed Stone, Crushed Slag, and Crushed Gravel for Dry-Bound or Water-Bound Macadam Base Courses and Bituminous Macadam Base and Surface Courses of Pavements, **04.03, 04.08**
D 694 Discontinued—Replaced by D 693
D 695–80 Test Method for Compressive Properties of Rigid Plastics, **08.01**
D 696–79 Test Method for Coefficient of Linear Thermal Expansion of Plastics, **08.01, 14.01**
D 697 Discontinued—Replaced by E 96
D 698–78 Test Methods for Moisture-Density Relations of Soils and Soil-Aggregate Mixtures, Using 5.5-lb (2.49-kg) Rammer and 12-in. (304.8-mm) Drop, **04.08**
D 699 Discontinued
D 700–81 Specification for Phenolic Molding Compounds, **08.01**
D 701 Discontinued
D 702–81 Specification for Cast Methacrylate Plastic Sheets, Rods, Tubes, and Shapes, **08.01**
D 703–81 Specification for Polystyrene Molding and Extrusion Materials, **08.01**
D 704–82 Specification for Melamine-Formaldehyde Molding Compounds, **08.01**
D 705–81 Specification for Urea-Formaldehyde Molding Compounds, **08.01**
D 706–82 Specification for Cellulose Acetate Molding and Extrusion Compounds, **08.01**
D 707–82 Specification for Cellulose Acetate Butyrate Molding and Extrusion Compounds, **08.01, 08.04**
D 708 Discontinued—Replaced by D 2123
D 709–82 Specification for Laminated Thermosetting Materials, **10.01**
D 710–81 Specification for Vulcanized Fibre Sheets, Rods, and Tubes Used for Electrical Insulation, **10.01**
D 711–75 Test Method for No-Pick-Up Time of Traffic Paint, **06.01**
D 712 Discontinued
D 713–81 Conducting Road Service Tests on Traffic Paint, **06.01**
D 714–56(1981) Evaluating Degree of Blistering of Paints, **06.01**
D 715–75(1981) Analysis of Barium Sulfate Pigments, **06.02**
D 716–75(1981) Testing of Mica Pigments, **06.02**
D 717–73(1979) Analysis of Magnesium Silicate Pigment, **06.02**
D 718–73(1979) Analysis of Aluminum Silicate Pigment, **06.02**
D 719–81 Analysis of Diatomaceous Silica Pigments, **06.02**
D 720–67(1977) Test Method for Free-Swelling Index of Coal, **05.05**
D 721–68(1982) Test Method for Oil Content of Petroleum Waxes, **05.01, 15.09**
D 722 Discontinued
D 723–45(1971) Test for Degree of Staining of Paper by Alkali, **15.09**
D 724–45(1971) Test Method for Surface Wettability of Paper (Angle-of-Contact Method), **15.09**
D 725 Discontinued
D 726–58(1971) Test Methods for Resistance of Paper to Passage of Air, **15.09**
D 727–76 Test Method for Kerosine Number of Roofing and Flooring Felt by the Vacuum Method, **04.04, 15.09**
D 728 Discontinued—Replaced by D 2114
D 729–81 Specification for Vinylidene Chloride Molding Compounds, **08.01**
D 730 Discontinued
D 731–67(1976) Test Method for Molding Index of Thermosetting Molding Powder, **08.01**
D 732–78 Test Method for Shear Strength of Plastics by Punch Tool, **08.01**
D 733 Redesignated F 39
D 734 Discontinued—Replaced by D 2219, D 2220
D 735 Discontinued—Replaced by D 2000
D 736 Discontinued
D 737–75(1980) Test Method for Air Permeability of Textile Fabrics, **07.01**
D 738 Discontinued
D 739 Discontinued
D 740–79 Specification for Methyl Ethyl Ketone, **06.03**
D 741 Discontinued—Replaced by D 668
D 742 Discontinued
D 743 Discontinued
D 744 Discontinued
D 745 Discontinued
D 746–79 Test Method for Brittleness Temperature of Plastics and Elastomers by Impact, **08.01, 09.02**
D 747–70(1981) Test Method for Stiffness of Plastics by Means of a Cantilever Beam, **08.01**

E. MISCELLANEOUS SUBJECTS

E 1–83 Specification for ASTM Thermometers, **05.03, 14.01**
E 2 Discontinued
E 3–80 Preparation of Metallographic Specimens, **03.03**
E 4–83 Load Verification of Testing Machines, **04.02, 07.01, 08.03**
E 5 Discontinued—Replaced by E 3
E 6–81 Definitions of Terms Relating to Methods of Mechanical Testing, **03.01, 08.03**
E 7–83 Definitions of Terms Relating to Metallography, **03.03**
E 8–82 Tension Testing of Metallic Materials, **02.01, 02.02, 02.03, 03.01**
E 9–81 Compression Testing of Metallic Materials at Room Temperature, **03.01**
E 10–78 Test Method for Brinell Hardness of Metallic Materials, **03.01**
E 11–81 Specification for Wire-Cloth Sieves for Testing Purposes, **04.01, 04.02, 04.06, 05.05, 14.02**
E 12–70(1981) Definitions of Terms Relating to Density and Specific Gravity of Solids, Liquids, and Gases, **04.02, 15.05**
E 13 Discontinued
E 14 Discontinued
E 15 Discontinued
E 16 Discontinued
E 17 Discontinued—Replaced by E 11
E 18–79 Test Methods for Rockwell Hardness and Rockwell Superficial Hardness of Metallic Materials, **02.03, 03.01**
E 19 Discontinued—Replaced by E 112
E 20–68(1974) Recommended Practice for Analysis by Microscopical Methods for Particle-Size Distribution of Particulate Substances of Subsieve Sizes, **14.02**
E 21–79 Recommended Practice for Elevated Temperature Tension Tests of Metallic Materials, **03.01**
E 22 Discontinued—Replaced by E 139
E 23–82 Notched Bar Impact Testing of Metallic Materials, **03.01**
E 24 Discontinued
E 25 Discontinued
E 26 Discontinued—Replaced by E 27
E 27–64(1981) Spectrographic Analysis of Zinc and Zinc Alloys by the Solution-Residue Technique, **03.06**
E 28–67(1982) Test Method for Softening Point by Ring-and-Ball Apparatus, **06.03**
E 29–67(1980) Recommended Practice for Indicating Which Places of Figures Are to Be Considered Significant in Specified Limiting Values, **02.03, 03.01, 03.03, 03.05**
E 30–77(1980) Chemical Analysis of Steel, Cast Iron, Open-Hearth Iron, and Wrought Iron, **03.05**
E 31–75(1979) Method for Chemical Analysis of Ferroalloys, **03.05**
E 32–42(1978) Sampling Ferroalloys for Determination of Chemical Composition, **03.05**
E 33 Discontinued—Replaced by E 140
E 34–83a Chemical Analysis of Aluminum and Aluminum Alloys, **03.05**
E 35–63(1980) Chemical Analysis of Magnesium and Magnesium Alloys, **03.05**
E 36 Discontinued—Replaced by E 478
E 37–76(1980) Chemical Analysis of Pig Lead, **03.05**
E 38–76a(1980) Chemical Analysis of Nickel-Chromium and Nickel-Chromium-Iron Alloys, **03.05**
E 39–75(1980) Chemical Analysis of Nickel, **03.05**
E 40–77(1982) Chemical Analysis of Slab Zinc (Spelter), **03.05**
E 41–79 Definitions of Terms Relating to Conditioning, **08.03, 14.02**
E 42 Redesignated G 23
E 43 Discontinued
E 44–83 Definitions of Terms Relating to Heat Treatment of Metals, **01.02, 03.03**
E 45–81 Recommended Practice for Determining the Inclusion Content of Steel, **03.03**
E 46–66(1978) Chemical Analysis of Lead- and Tin-Base Solder, **03.05**
E 47–77(1982) Chemical Analysis of Zinc Die-Casting Alloys, **03.05**
E 48 Discontinued—Replaced by E 140
E 49 Discontinued
E 50–82 Recommended Practices for Apparatus, Reagents, and Safety Precautions for Chemical Analysis of Metals, **03.05**
E 51–67(1978) Spectrographic Analysis of Tin Alloys by the Powder Technique, **03.06**
E 52 Discontinued
E 53–82 Chemical Analysis of Copper (Electrolytic Determination of Copper), **03.05**
E 54–80 Chemical Analysis of Special Brasses and Bronzes, **03.05**
E 55–48(1982) Sampling Wrought Nonferrous Metals and Alloys for Determination of Chemical Composition, **02.01, 02.02, 03.05**
E 56–83 Chemical Analysis of Silver Brazing Alloys, **03.05**
E 57–60(1978) Chemical Analysis of White Metal Bearing Alloys, **03.05**
E 58 Discontinued—Combined with E 37
E 59–78(1982) Sampling Steel and Iron for Determination of Chemical Composition, **03.05**
E 60–80 Recommended Practice for Photometric Methods for Chemical Analysis of Metals, **03.05**
E 61 Redesignated E 35
E 62–76(1980) Photometric Methods for Chemical Analysis of Copper and Copper Alloys, **03.05**
E 63 Discontinued—Combined with E 75
E 64 Discontinued—Combined with E 40
E 65 Discontinued
E 66 Discontinued—Combined with A 146
E 67 Discontinued—Replaced by E 87
E 68 Discontinued
E 69–80 Test Method for Combustible Properties of Treated Wood by the Fire-Tube Apparatus, **04.07**
E 70–77(1982) Test Method for pH of Aqueous Solutions with the Glass Electrode, **15.05**
E 71 Discontinued—Replaced by E 446
E 72–80 Conducting Strength Tests of Panels for Building Construction, **04.07**
E 73–74 Testing Truss Assemblies, **04.07**
E 74–81 Calibration of Force-Measuring Instruments for Verifying the Load Indication of Testing Machines, **03.01**
E 75–76(1980) Chemical Analysis of Copper-Nickel and Copper-Nickel-Zinc Alloys, **03.05**
E 76–56(1978) Chemical Analysis of Nickel-Copper Alloys, **03.05**
E 77–82 Verification and Calibration of Liquid-in-Glass Thermometers, **14.01**
E 78 Discontinued—Combined with E 9
E 79 Discontinued—Replaced by E 112
E 80–63(1975) Recommended Practice for Dilatometric Analysis of Metallic Materials, **03.03, 10.04, 14.02**
E 81–77(1982) Preparing Quantitative Pole Figures of Metals, **03.03**
E 82–63(1979) Determining the Orientation of a Metal Crystal, **03.03**
E 83–67(1980) Verification and Classification of Extensometers, **03.01**
E 84–81a Test Method for Surface Burning Characteristics of Building Materials, **04.07**
E 85 Discontinued—Replaced by E 139
E 86 Discontinued
E 87–58(1978) Photometric Methods for Chemical Analysis of Lead, Tin, Antimony, and Their Alloys, **03.05**
E 88–58(1978) Sampling Nonferrous Metals and Alloys in Cast Form for Determination of Chemical Composition, **02.01, 02.02, 03.05**
E 89 Discontinued—Replaced by E 112
E 90–81 Laboratory Measurement of Airborne-Sound Transmission Loss of Building Partitions, **04.06**
E 91 Discontinued—Replaced by E 112
E 92–82 Test Method for Vickers Hardness of Metallic Materials, **03.01**
E 93 Discontinued—Replaced by E 140
E 94–77(1983) Recommended Practice for Radiographic Testing, **03.03**
E 95–68(1981) Specification for Cell-Type Oven with Controlled Rates of Ventilation, **14.02**
E 96–80 Test Methods for Water Vapor Transmission of Materials, **04.06, 08.03, 15.09**
E 97–82 Test Method for 45-deg, 0-deg Directional Reflectance Factor of Opaque Specimens by Broad-Band Filter Reflectometry, **06.01, 14.02, 15.09**
E 98 Discontinued—Replaced by E 155
E 99 Discontinued—Replaced by E 390
E 100–81 Specification for ASTM Hydrometers, **05.03, 14.01**
E 101–67(1983) Spectrographic Analysis of Aluminum and Aluminum Alloys by the Point-to-Plane Technique, **03.06**
E 102–81 Test Method for Saybolt Furol Viscosity of Bituminous Materials at High Temperatures, **04.04**
E 103–61(1979) Rapid Indentation Hardness Testing of Metallic Materials, **02.02, 03.01**
E 104–51(1971) Recommended Practice for Maintaining Constant Relative Humidity by Means of Aqueous Solutions, **08.03, 10.01, 10.02, 11.03**
E 105–58(1975) Recommended Practice for Probability Sampling of Materials, **04.03, 07.01, 14.02**
E 106–83 Chemical Analysis of Copper-Beryllium Alloys, **03.05**
E 107–64(1978) Chemical Analysis of Electronic Nickel, **03.05**
E 108–83 Fire Tests of Roof Coverings, **04.04, 04.07**
E 109 Discontinued—Replaced by E 709
E 110–82 Test Method for Indentation Hardness of Metallic Materials by Portable Hardness Testers, **03.01**
E 111–82 Test Method for Young's Modulus, Tangent Modulus, and Chord Modulus, **03.01**
E 112–82 Determining Average Grain Size, **03.03**
E 113 Discontinued
E 114–75(1981) Recommended Practice for Ultrasonic Pulse-Echo Straight-Beam Testing by the Contact Method, **03.03**
E 115–71(1979) Recommended Practices for Photographic Processing in Spectrochemical Analysis, **03.06**
E 116–81 Recommended Practice for Photographic Photometry in Spectrochemical Analysis, **03.06**
E 117–64(1981) Spectrographic Analysis of Pig Lead by the Point-to-Plane Technique, **03.06**
E 118–83 Chemical Analysis of Copper-Chromium Alloys, **03.05**
E 119–83 Fire Tests of Building Construction and Materials, **04.07**
E 120–75(1979) Chemical Analysis of Titanium and Titanium Alloys, **03.05**
E 121–83 Chemical Analysis of Copper-Tellurium Alloys, **03.05**
E 122–72(1979) Recommended Practice for Choice of Sample Size to Estimate the Average Quality of a Lot or Process, **14.02**
E 123–78 Specification for Apparatus for Determination of Water by Distillation, **05.03, 14.02**
E 124–61(1981) Specification for Weighing and Drying Apparatus for Microchemical Analysis, **14.02**
E 125–63(1980) Reference Photographs for Magnetic Particle Indications on Ferrous Castings, **03.03**
E 126–76(1982) Inspection, Test, and Standardization of Hydrometers, **14.01**
E 127–82a Recommended Practice for Fabricating and Checking Aluminum Alloy Ultrasonic Standard Reference Blocks, **03.03**
E 128–61(1981) Test Method for Maximum Pore Diameter and Permeability of Rigid Porous Filters for Laboratory Use, **14.02**
E 129–74(1979) Spectrographic Analysis of Thermionic Nickel Alloys by the Powder Techniques, **03.06, 10.04**
E 130–81 Recommended Practice for Designation of Shapes and Sizes of Graphite Electrodes, **03.06**
E 131–83 Definitions of Terms and Symbols Relating to Molecular Spectroscopy, **14.01**
E 132–61(1979) Test Method for Poisson's Ratio at Room Temperature, **03.01**
E 133–78 Specification for Distillation Equipment, **05.03, 14.02**
E 134–68(1981) Specification for Pensky-Martens Closed Flash Tester, **05.03, 14.02**
E 135–81 Definitions of Terms and Symbols Relating to Emission Spectroscopy, **03.06**
E 136–82 Test Method for Behavior of Materials in a Vertical Tube Furnace at 750°C, **04.07**
E 137–82 Recommended Practice for Evaluation of Mass Spectrometers for Quantitative Analysis from a Batch Inlet, **14.01**
E 138 Discontinued—Replaced by E 709
E 139–83 Recommended Practice for Conducting Creep, Creep-Rupture, and Stress-Rupture Tests of Metallic Materials, **03.01**
E 140–79 Standard Hardness Conversion Tables for Metals (Relationship Between Brinell Hardness, Vickers Hardness, Rockwell Hardness, Rockwell Superficial Hardness, and Knoop Hardness), **03.01**
E 141–69(1975) Recommended Practice for Acceptance of Evidence Based on the Results of Probability Sampling, **14.02**
E 142–77(1983) Controlling Quality of Radiographic Testing, **03.03**
E 143–61(1979) Test Method for Shear Modulus at Room Temperature, **03.01**
E 144–64(1981) Recommended Practice for Safe Use of Oxygen Combustion Bombs, **14.02**
E 145–68(1981) Specification for Gravity-Convection and Forced-Ventilation Ovens, **14.02**
E 146–68(1979) Chemical Analysis of Zirconium and Zirconium Alloys, **03.05**
E 147–61(1981) Specification for Apparatus for Microdetermination of Nitrogen by Kjeldahl Method, **14.02**
E 148–66(1981) Specification for Apparatus for Microdetermination of Nitrogen by Dumas Method, **14.02**
E 149 Redesignated C 952
E 150–64(1981) Recommended Practice for Conducting Creep and Creep-Rupture Tension Tests of Metallic Materials Under Conditions of Rapid Heating and Short Times (Intent to Withdraw), **03.01**
E 151–64(1981) Recommended Practice for Tension Tests of Metallic Materials at Elevated Temperatures with Rapid Heating and Conventional or Rapid Strain Rates (Intent to Withdraw), **03.01**
E 152–81a Fire Tests of Door Assemblies, **04.07**
E 153 Discontinued
E 154–68(1979) Testing Materials for Use as Vapor Barriers Under Concrete Slabs and as Ground Cover in Crawl Spaces, **04.07**
E 155–79 Reference Radiographs for Inspection of Aluminum and Magnesium Castings, **02.02, 03.03**
E 156–68(1979) Photometric Method for Determination of Phosphorus in High-Phosphorus Brazing Alloys, **03.05**
E 157–82a Assigning Phase Designations in Metallic Systems, **03.03**
E 158–81 Practice for Fundamental Calculations to Convert Intensities into Concentrations in Optical Emission Spectrochemical Analysis, **03.06**
E 159–68(1979) Test Method for Hydrogen Loss of Copper, Tungsten, and Iron Powders, **02.05, 03.05**
E 160–80 Test Method for Combustible Properties of Treated Wood by the Crib Test, **04.07**
E 161–70(1977) Specification for Precision Electroformed Sieves, **14.02**
E 162–81a Test Method for Surface Flammability of Materials Using a Radiant Heat Energy Source, **04.07**
E 163–80 Fire Tests of Window Assemblies, **04.07**
E 164–81 Recommended Practice for Ultrasonic Contact Examination of Weldments, **03.03**
E 165–80(1983) Recommended Practice for Liquid Penetrant Inspection, **03.03**
E 166 Discontinued—Replaced by E 167
E 167–77(1982) Recommended Practice for Goniophotometry of Objects and Materials, **06.01, 14.02**
E 168–67(1977) Recommended Practices for General Techniques of Infrared Quantitative Analysis, **14.01**
E 169–63(1981) Recommended Practices for General Techniques of Ultraviolet Quantitative Analysis, **14.01**
E 170–76 Definitions of Terms Relating to Dosimetry, **12.02**
E 171–82 Specification for Standard Atmospheres for Conditioning and Testing Materials, **08.03, 15.09**
E 172–67(1979) Recommended Practice for Describing and Specifying the Excitation Source in Emission Spectrochemical Analysis, **03.06**
E 173–80 Recommended Practices for Conducting Interlaboratory Studies of Methods for Chemical Analysis of Metals, **03.05**
E 174 Discontinued
E 175–82a Definitions of Terms Relating to Microscopy, **14.01**
E 176–83a Terminology Relating to Fire Standards, **04.07**
E 177–71(1980) Recommended Practice for Use of the Terms Precision and Accuracy as Applied to Measurement of a Property of a Material, **04.01, 14.02**
E 178–80 Recommended Practice for Dealing with Outlying Observations, **14.02**
E 179–81 Recommended Practice for Selection of Geometric Conditions for Measurement of Reflectance and Transmittance, **06.01, 14.02**
E 180–78 Recommended Practice for Developing Precision Data on ASTM Methods for Analysis and Testing of Industrial Chemicals, **06.03, 15.05**
E 181–82 Detector Calibration and Analysis of Radionuclides, **12.02**
E 182 Discontinued
E 183 Discontinued
E 184–79 Practice for Effects of High-Energy Neutron Radiation on the Mechanical Properties of Metallic Materials, **03.01, 12.02**
E 185–82 Practice for Conducting Surveillance Tests for Light Water-Cooled Nuclear Power Reactor Vessels, **03.01, 12.02**
E 186–81 Reference Radiographs for Heavy-Walled (2 to 4½-in. (51 to 114-mm)) Steel Castings, **01.02, 03.03**
E 187 Redesignated G 24
E 188 Redesignated G 25
E 189–63(1975) Recommended Practice for Determining Temperature-Electrical Resistance Characteristics (EMF) of Metallic Materials, **14.02**
E 190–80 Guided Bend Test for Ductility of Welds, **03.01**
E 191–64(1981) Specification for Apparatus for Microdetermination of Carbon and Hydrogen in Organic and Organo-Metallic Compounds, **14.02**

Counter, **14.02**

F 662–80 Measurement of Particle Count and Size Distribution in Batch Samples for Filter Evaluation Using an Electrical Resistance Particle Counter, **14.02**

F 663–80 Practice for Manual Analysis of Interferometric Data by Least-Squares Fitting to a Plane Reference Surface, **10.04**

F 664–80 Practice for Manual Analysis of Interferometric Data by Least-Squares Fitting to a Spherical Reference Surface and for Computer-Aided Analysis of Interferon Metric Data by Least-Squares Fitting to Both Plane and Spherical Reference Surfaces, **10.04**

F 665–80 Classification for Vinyl Chloride Plastics Used in Biomedical Application, **13.01**

F 666–80 Specification for Stainless Steel Flexible Wire for Surgical Fixation for Bone, **13.01**

F 667–82a Specification for 8, 10, 12, and 15-in. Corrugated Polyethylene Tubing, **08.04**

F 668–81 Specification for Poly(Vinyl Chloride) (PVC)-Coated Steel Chain-Link Fence Fabric, **01.06**

F 669–81 Specification for Strength Requirements of Metal Posts and Rails for Industrial Chain Link Fence, **01.06**

F 670–80 Specification for Dispensing Tanks, 5-gal (20-L) and 10-gal (40-L), **01.02**

F 671–83 Test for Measuring Flat Length on Slices of Electronic Materials, **10.05**

F 672–80 Measuring Resistivity Profile Perpendicular to the Surface of a Silicon Wafer Using a Spreading Resistance Probe, **10.05**

F 673–80 Measuring Resistivity of Semiconductor Slices with a Noncontact Eddy-Current Gage, **10.05**

F 674–80 Practice for Preparing High-Resistivity *n*-Type Silicon for Spreading Resistance Measurements, **10.05**

F 675–80 Measuring Nonequilibrium Transient Photocurrents from *p-n* Functions, **10.04**

F 676–83 Measuring Unsaturated TTL Sink Current, **10.04**

F 677–80 Test Method for Fluid and Grease Resistance of Thermoset Encapsulating Compounds Used in Electronic and Microelectronic Applications, **10.04**

F 678–82 Specification for Polyethylene Gas Pressure Pipe Tubing, and Fittings, **08.04**

F 679–80 Specification for Poly(Vinyl Chloride) (PVC) Large-Diameter Plastic Gravity Sewer Pipe and Fittings, **08.04**

F 680–80 Testing Nails, **01.04, 15.08**

F 681–82 Practice for Use of Branch Connections, **01.02**

F 682–82a Specification for Wrought Carbon Steel Sleeve-Type Pipe Couplings, **01.02**

F 683–80 Practice for Selection and Application of Thermal Insulation for Piping and Machinery, **01.02**

F 684 Not yet assigned

F 685–80 Practice for Determining Toner Usage, Efficiency, and Dusting in Copiers Using Single-Component Toner Systems, **15.09**

F 686–80 Practice for Evaluation of Image Quality Produced by a Carbonless Copy Paper with an Electric Typewriter, **15.09**

F 687–80 Practice for On-Site Calibration of Liquid-borne Automatic Particle Counters with Adjustable Individual Size Thresholds, **15.03**

F 688–80 Specification for Wrought Cobalt-Nickel-Chromium-Molybdenum Alloy Plate, Sheet, and Foil for Surgical Implants, **13.01**

F 689–80 Practice for Determination of the Temperature of Above-Ground Plastic Gas Pressure Pipe Within Metallic Casings, **08.04**

F 690–80 Practice for Underground Installation of Thermoplastic Pressure Piping Irrigation Systems, **08.04**

F 691–80 Practice for Preparing Photoplates for Measuring Flatness Deviation, **10.05**

F 692–80 Measuring Adhesion Strength of Solderable Films to Substrates, **10.04**

F 693–80 Practice for Sealing Seams of Resilient Sheet Floor Products by Use of Liquid Seam Sealers, **15.04**

F 694–80 Test Method for Heel Attaching Strength of Women's Shoes, **15.07**

F 695–81 Practice for Evaluation of Test Data Obtained by Using the Horizontal Pull Slipmeter (HPS) or the James Machine for Measurement of Static Slip Resistance of Footwear Sole, Heel, or Related Materials, **15.07**

F 696–80 Specification for Leather Protectors for Rubber Insulating Gloves and Mittens, **10.03**

F 697–80 Practice for Care and Use of Mouthguards, **15.07**

F 698–83 Specification for Physical Information to Be Provided for Amusement Rides and Devices, **15.07**

F 699–81 Practice for Accelerated Conditioning of Polybutylene Pipe and Tubing for Subsequent Quality Control Testing, **08.04**

F 700–81 Practice for Care and Handling of Intracranial Aneurysm Clips and Instruments, **13.01**

F 701–81 Practice for Care and Handling of Neurosurgical Implants and Instruments, **13.01**

F 702–81 Specification for Polysulfone Resin for Medical Applications, **13.01**

F 703–81 Specification for Implantable Breast Prostheses, **13.01**

F 704–81 Practice for Selecting Bolting Lengths for Piping System Flanged Joints, **01.02**

F 705 Not yet assigned

F 706–81 Practice for Determination of Fusion Temperature of Dry Electrostatic Heat Fixing Toners, **15.09**

F 707–82 Specification for Modular Gage Boards, **01.02**

F 708–81 Practice for Design and Installation of Rigid Pipe Hangers, **01.02**

F 709–81 Specification for Gasket—Asbestos Metallic Cloth Material, **09.02**

F 710–81 Practice for Preparing Concrete Floors and Other Monolithic Floors to Receive Resilient Flooring, **15.04**

F 711–81 Specification for Fiberglass-Reinforced Plastic (FRP) Rod and Tube Used in Live Line Tools, **10.03**

F 712–81 Testing Electrically Insulating Plastic Guard Equipment for Protection of Workers, **10.03**

F 713 Not yet assigned

F 714–81 Specification for Polyethylene (PE) Plastic Pipe (SDR-PR) Based on Outside Diameter, **08.04**

F 715–81 Testing Spill Control Barrier Membrane Materials, **11.04**

F 716–82 Testing Sorbent Performance—Absorbents, **11.04**

F 717–81 Specification for Football Helmets, **15.07**

F 718–81 Standard for Shipbuilders and Marine Paints and Coatings Products/Procedure Data Sheet, **01.02**

F 719–81 Practice for Testing Biomaterials in Rabbits for Primary Skin Irritation, **13.01**

F 720–81 Practice for Testing Guinea Pigs for Contact Allergens: Guinea Pig Maximization Test, **13.01**

F 721–81 Specification for Gage Piping Assemblies, **01.02**

F 722–82 Specification for Welded Joints for Shipboard Piping Systems, **01.02**

F 723–82 Practice for Conversion Between Resistivity and Dopant Density for Boron-Doped and Phosphorus-Doped Silicon, **10.05**

F 724–81 Practice for Outdoor Evaluation of Tire Sidewall Component Cracking Resistance, **09.02**

F 725–81 Practice for Drifting Impact Test Requirements in Thermoplastic Pipe and Fittings Standards, **08.04**

F 726–81 Testing Sorbent Performance of Adsorbents, **11.04**

F 727–81 Measurement of Transmittance of See-Through Photoplate, **10.05**

F 728–81 Preparation of an Optical Microscope for Dimensional Measurements Practice for, **10.05**

F 729–81 Test Methods for Temperature Coefficient of Resistance of Film Resistors, **10.04**

F 730–81 Test Methods for Hermeticity of Electron Devices by a Weight-Gain Test, **10.04**

F 731–81 Specification for Expanded PTFE Cord-Type Gasket Material, **09.02**

F 732–82 Practice for Reciprocating Pin on Flat Evaluation of Friction and Wear Properties of Polymeric Materials for Use in Total Joint Prostheses, **13.01**

F 733–81 Test Method for Optical Distortion and Deviation of Transparent Parts Using the Double-Exposure Method, **15.03**

F 734–81 Test Method for Shear Strength of Fusion-Bonded Polycarbonate Aerospace Glazing Material, **15.03**

F 735–81 Practice for Abrasion Resistance of Transparent Plastics and Coatings Using the Oscillating Sand Method, **15.03**

F 736–81 Test Method for Impact Resistance of Monolithic Polycarbonate Sheet by Means of a Falling Weight, **15.03**

F 737–81 Performance Specification for Ice Hockey Skate Blades, **15.07**

F 738–81 Specification for Stainless Steel Metric Bolts, Screws, and Studs, **15.08**

F 739–81 Test Method for Resistance of Protective Clothing Materials to Permeation by Hazardous Liquid Chemicals, **15.07**

F 740–82a Definitions of Terms Relating to Filtration, **14.02**

F 741–81 Determining the Crystallographic Axes and Contrast Ratio of a Pockets Cell Electro-Optic Crystal Operating in the Longitudinal Mode, **10.04**

F 742–81 Practice for Evaluating an Interferometer, **10.04**

F 743–81 Measuring Contrast Ratio of a Pair of Linear Polarizers for Visible Radiation, **10.04**

F 744–81 Measuring Dose Rate Threshold for Upset of Digital Integrated Circuits, **10.04**

F 745–81 Specification for Stainless Steel for Cast and Solution Annealed Surgical Implant Applications, **13.01**

F 746–81 Test Method for Pitting or Crevice Corrosion of Metallic Surgical Implant Materials, **03.02, 13.01**

F 747–82 Definitions of Terms Relating to Amusement Rides and Devices, **15.07**

F 748–82 Practice for Selecting Generic Biological Test Methods for Materials and Devices, **13.01**

F 749–82 Practice for Evaluating Material Extracts by Intracutaneous Injection in the Rabbit, **13.01**

F 750–82 Practice for Evaluating Material Extracts by Systemic Injection in the Mouse, **13.01**

F 751–83 Method for Measuring Particle Size of Wide Size Range Dry Toners, **15.09**

F 752–82 Test Method for Effective Series Resistance (ESR) and Capitance of Multilayer Ceramic Capacitors at High Frequencies, **10.05**

F 753–82 Classification of Brassieres, **15.07**

F 754–83 Specification for Implantable Polytetrafluoroethylene (PTFE) Polymer Fabricated in Sheet, Tube, and Rod Shapes, **13.01**

F 755–82 Specification for Selection of Porous Polyethylene for Use in Surgical Implants, **13.01**

F 756–82 Practice for Assessment of the Hemolytic Properties of Materials, **13.01**

F 757–82 Method for Determining Energy Consumption of Copier and Copier-Duplicating Equipment, **15.09**

F 758–82 Specification for Smooth-Wall Poly (Vinyl Chloride) (PVC) Plastic Underdrain Systems for Highway, Airport, and Similar Drainage, **08.04**

F 759–82 Specification for Hot Chocolate Beverage Dispensers, **15.07**

F 760–82 Specification for Food Service Equipment Manuals, **15.07**

F 761–82 Specification for Strength Requirements of Steel Posts and Rails for Residential Chain Link Fence, **01.06**

F 762–82 Practice for Determining Change in Groove (or Void) Depth with Distance Traveled for Passenger Car Tires, **09.02**

F 763–82 Practice for Short-Term Screening of Implant Materials, **13.01**

F 764–82 Practice for Compatibility of Materials with High-Energy Propellants (Impact Sensitivity Threshold Technique), **15.03**

F 765–82 Wildcats, Ship Anchor Chain, **01.02**

F 766–82 Test Method for Melting Point of Waxes, **15.09**

F 767–82 Test Method for Image Stability of Chemical Carbonless Paper to Light, **15.09**

F 768–82 Specular Reflectance and Transmittance Measurements of Optically Flat-Coated and Non-Coated Specimens, **10.04**

F 769–82 Measuring Transistor and Diode Leakage Currents, **10.04**

F 770–82 Practice for Operation Procedures for Amusement Rides and Devices, **15.07**

F 771–82 Specification for Polyethylene (PE) Thermoplastic High-Pressure Irrigation Pipeline Systems, **08.04**

F 772–82 Test Method for Noise Quality of Film-Type Resistors, **10.04**

F 773–82 Measuring Dose Rate Response of Linear Integrated Circuits, **10.04**

F 774–82 Guide for Analysis of Latchup Susceptibility in Bipolar Integrated Circuits, **10.04**

F 775–83 Test Method for Wafer Flatness by Interferometric, Non-Contact Technique, **10.05**

F 776–82 Test Method for Resistance of Materials to Horizontal Flame Propagation (for Aerospace Vehicles, Standard Conditions), **15.03**

F 777–82 Test Method for Resistance of Electrical Wire Insulation Materials to Flame at 60°, **15.03**

F 779–82 Test Method for Torsion Characteristic of Alpine Skis, **15.07**

F 780–82 Test Method for Linear Deformation and Breaking Strength of Alpine Skis, **15.07**

F 781–82 Perfluoro (alkoxyalkane) Copolymer (PFA) Plastic-Lined Ferrous Metal Pipe and Fittings, **08.04**

F 782–82 Specification for Doors, Furniture, Marine, **01.02**

F 783–82 Specification for Staple, Handgrab, Handle, and Stirrup Rung, **01.02**

F 784–82 Calibrating Radioisotope Hermetric Test Apparatus, **10.04**

F 785–82 Test Method for Hermeticity of Sealed Devices by a Radioisotope Test, **10.04**

F 786–82 Specification for Metallic Bone Plates, **10.04**

F 787–82 Specification for Metallic Nail-Plate Appliances, **13.01**

F 788–82 Specification for Surface Discontinuities of Bolts, Screws, and Studs, Inch and Metric Series, **15.08**

F 789–82 Specification for Type PS-46 Poly(Vinyl Chloride) (PVC) Plastic Gravity Flow Sewer Pipe and Fittings, **08.04**

F 790–82 Testing Materials for Aerospace Plastic Transparent Enclosures, **15.03**

F 791–82 Practice for Stress Crazing of Transparent Plastics, **15.03**

F 792–82 Practice for Design and Use of Ionizing Radiation Equipment for the Detection of Items Prohibited in Controlled Access Areas, **15.07**

F 793–82 Classification of Wallcovering by Durability Characteristics, **15.07**

F 794–83 Specification for Poly(Vinyl Chloride) (PVC) Large Diameter Ribbed Gravity Sewer Pipe and Fittings Based on Controlled Inside Diameter, **08.04**

F 795–82 Practice for Determining the Performance of a Filter Medium Employing a Single-Pass, Constant-Pressure, Liquid Test, **14.02**

F 796–82 Practice for Determining the Performance of a Filter Medium Employing a Single-Pass, Constant-Rate, Liquid Test, **14.02**

F 797–82 Practice for Determining the Performance of a Filter Medium Employing a Multipass, Constant-Rate, Liquid Test, **14.02**

F 798–82 Practice for Determining Gettering Rate, Sorption Capacity, and Gas Content of Nonevaporable Getters in the Molecular Flow Region, **10.04**

F 799–82 Specification for Thermomechanically Processed Cobalt-Chromium-Molybdenum Alloy for Surgical Implants, **13.01**

F 801–83 Method for Measuring Optical Angular Deviation of Transparent Parts, **15.03**

F 802–83 Guide for Selection of Certain Walkway Surfaces When Considering Footwear Traction, **15.07**

F 803–83 Specification for Eye Protectors for Use by Players of Racket Sports, **02.05**

F 804–83 Practice for Comparing Particle Size in the Use of Alternative Types of Particles Counters, **02.05**

F 805–83 Test Method for Photoplate Surface Flatness by Interferometric Non-Contact Technique, **10.04**

F 806–83 Test Method for Compressibility of Laminated Composite Gasket Materials, **09.02**

F 808–83 Guidelines for Collecting Skimmer Performance Data in Uncontrolled Environments, **11.04**

F 811–83 Practice for Accelerometer Use in Vehicles for Tire Testing, **09.02**

F 813–83 Practice for Direct Contact Cell Culture Evaluation of Materials for Medical Devices, **13.01**

F 814–83 Test Method for Specific Optical Density of Smoke Generated by Solid Materials for Aerospace Applications, **15.03**

F 815–83 Test Method for Detection of Epitaxial Spikes, **10.05**

F 816–83 Test Method for Combined Fine and Gross Leaks for Large Hybrid Microcircuit Packages, **10.04**

F 817–83 Method for Characterization of Film Resistor Materials and Processes, **10.04**

EXHIBIT 12

1984 Annual Book of ASTM Standards

Index

A 750–77(1984) Specification for Steel Air Ventilating Grille Units for Detention Areas, **01.05**
A 751–82 Methods, Practices, and Definitions for Chemical Analysis of Steel Products, **01.01, 01.02, 01.03, 01.04, 01.05, 03.05**
A 752–83 Specification for General Requirements for Wire Rods and Coarse Round Wire, Alloy Steel, **01.03**
A 752M–83 Specification for General Requirements for Wire Rods and Coarse Round Wire, Alloy Steel (Metric), **01.03**
A 753–78 Specification for Nickel-Iron Soft Maagnetic Alloys, **03.04**
A 754–79 Test Method for Coating Thickness by X-Ray Fluorescence, **01.06**
A 755–83 Specification for Steel Sheet Zinc-Coated (Galvanized) by the Hot-Dip Process and Coil-Coated for Roofing and Siding, General Requirements **01.06**
A 756–78 Specification for Stainless Steel for Bearing Applications, **01.05**
A 757–81 Specification for Steel Castings, Ferritic and Martensitic for Pressure-Containing and Other Applications for Low-Temperature Service, **01.01, 01.02**
A 758–83 Specification for Butt Welding, Wrought Carbon Steel, Piping Fittings With Improved Notch Toughness, **01.01**
A 759–78 Specification for Carbon Steel Crane Rails, **01.04**
A 760–79 Specification for Pipe, Corrugated Steel, Zinc-Coated (Galvanized), **01.06**
A 761–79 Specification for Steel, Galvanized, Corrugated Structural Plates and Fasteners for Pipe, Pipe-Arches, and Arches, **01.06, 15.08**
A 762–79 Specification for Precoated (Polymeric) Galvanized Steel Sewer and Drainage Pipe, **01.06**
A 763–83 Recommended Practices for Detecting Susceptibility to Intergranular Attack in Ferritic Stainless Steels, **01.03**
A 764–79 Specification for Steel Wire, Carbon, Drawn, Galvanized and Galvanized at Size for Mechanical Springs, **01.03, 01.05**
A 765–79 Specification for Carbon Steel and Low-Alloy Steel Pressure-Vessel-Component Forgings with Mandatory Toughness Requirements, **01.05**
A 766–79 Specification for Forgings, Leaded, and Resulfurized Carbon Steel for Pressure-Containing Applications, **01.01**
A 767–79 Specification for Zinc-Coated (Galvanized) Bars for Concrete Reinforcement, **01.04**
A 768–82 Specification for Vacuum-Treated 12 % Chromium Alloy Steel Forgings for Turbine Rotors and Shafts, **01.05**
A 769–79 Specification for Electric Resistance Welded Steel Shapes, **01.04**
A 770–82 Specification for Through-Thickness Tension Testing of Steel Plates for Special Applications, **01.04**
A 771–83 Specification for Austenitic Stainless Steel Tubing for Breeder Reactor Core Components, **01.01, 12.01**
A 772–80 Test Method for A-C Magnetic Permeability of Materials Using Sine Current, **03.04**
A 773–80 Test Method for D-C Magnetic Properties of Materials Using Ring and Permeameter Procedures with D-C Electronic Hysteresigraphs, **03.04**
A 774–83 Specification for As-Welded Wrought Austenitic Stainless Steel Fittings for General Corrosive Service at Low and Moderate Temperatures, **01.01**
A 775–81 Specification for Epoxy-Coated Reinforcing Steel Bars, **01.04**
A 777–80 Specification for Galvanized Round Steel Tying Wire, **01.06**
A 778–82 Specification for Welded, Unannealed Austenitic Stainless Steel Tubular Products, **01.01**
A 779–80 Specification for Steel Strand, Seven Wire, Uncoated, Compacted, Stress-Relieved for Prestressed Concrete, **01.04**
A 780–80 Practice for Repair of Damaged Hot-Dip Galvanized Coatings, **01.06**
A 781–82 Specification for Castings, Steel and Alloy, Common Requirements for General Industrial Use, **01.02**
A 782/A 782M–82 Specification for Pressure-Vessel Plates, Quenched and Tempered, Manganese-Chromium-Molybdenum-Silicon-Zirconium Alloy Steel, **01.04**
A 783–81 Specification for Aluminum-Zinc Alloy-Coated Steel Chain Link Fence Fabric, **01.06**
A 784–81 Specification for Aluminum-Zinc Alloy-Coated Steel Wire Rope and Fittings for Highway Guard Rail, **01.06**
A 785–81 Specification for Aluminum-Zinc Alloy-Coated Wire Strand, **01.06**
A 786–81 Specification for Rolled Steel Floor Plates, **01.04**
A 787–81 Specification for Electric-Resistance-Welded Metallic-Coated Carbon Steel Mechanical Tubing, **01.01**
A 788–81 Specification for General Requirements for Steel Forgings, **01.05**
A 789–82 Specification for Seamless and Welded Ferritic/Austenitic Stainless Steel Tubing for General Service, **01.01**
A 790–82 Specification for Seamless and Welded Ferritic/Austenitic Stainless Steel Pipe, **01.01**
A 791–83 Specification for Welded, Unannealed Ferritic Stainless Steel Tubing, **01.01**
A 792–83 Specification for Steel Sheet, Aluminum-Zinc Alloy-Coated by the Hot-Dip Process, **01.06**
A 793–81 Specification for Rolled Floor Plate, Stainless Steel, **01.03**
A 794–82 Specification for Steel, Carbon (0.16 Maximum to 0.25 Maximum %), Cold-Rolled Sheet, Commercial Quality, **01.03**
A 795–82 Specification for Black and Hot-Dipped Zinc-Coated (Galvanized) Welded and Seamless Steel Pipe for Fire Protection Use, **01.01**
A 796–82 Practice for Structural Design of Corrugated Steel Pipe, Pipe-Arches, and Arches for Storm and Sanitary Sewers, **01.06**
A 797–82 Specification for Aluminum-Zinc Alloy-Coated Steel Overhead Ground Wire Strand, **01.06**
A 798–82 Practice for Installing Factory-Made Corrugated Steel Sewer Pipe, **01.06**
A 799–82 Specification for Steel Castings, Stainless, Instrument Calibration, for Estimating Ferrite Content, **01.02**
A 800–82 Practice for Steel Castings, Austenitic Alloy, Estimating Ferrite Content, Thereof **01.02**
A 801–82 Specification for Iron-Cobalt High Magnetic Saturation Alloys, **03.04**
A 802–82 Practice for Steel Castings, Textures and Discontinuities, Evaluation and Specifying, by Visual Examination, **01.02**
A 803–83 Specification for Welded Ferritic Stainless Steel Feedwater Heater Tubes, **01.01**
A 804–82 Test Method for Alternating-Current Magnetic Properties of Materials at Power Frequencies Using Sheet-Type Test Specimens, **03.04**
A 805–82 Specification for Cold-Rolled Carbon Steel Flat Wire, **01.03**
A 806–83 Specification for Steel Sheet, Aluminum-Zinc Alloy Coated by the Hot-Dip Process for Storm Sewer and Drainage Pipe, **01.06**
A 807–82 Practice for Installing Corrugated Steel Structural Plate Pipe for Sewers, **01.06**
A 808–82 Specification for High-Strength, Low-Alloy Carbon, Manganese, Columbium, Vanadium Steel of Structural Quality with Improved Notch Toughness, **01.04**
A 809–83 Specification for Aluminum-Coated (Aluminized) Carbon Steel Wire, **01.06**
A 810–83 Specification for Zinc Coated (Galvanized) Steel Pipe Winding Mesh, **01.06**
A 811–83 Specification for Soft Magnetic Iron Fabricated by Powder Metallurgy Techniques, **03.04**
A 812/A 812M–83 Specification for Steel Sheet, Hot-Rolled, High-Strength, Low-Alloy for Welded Layered Pressure Vessels, **01.03**
A 813–83 Specification for Single or Double Welded Austenitic Stainless Steel Pipe, **01.01**
A 814–83 Specification for Cold Worked Welded Austenitic Stainless Steel Pipe, **01.01**
A 815–83 Specification for Wrought Ferritic and Ferritic/Austenitic Stainless Steel Piping Fittings, **01.01**
A 816–83 Specification for Steel Sheet, Zinc-Coated (Galvanized) by the Hot-Dip Process, High-Strength, Low Alloy, **01.06**
A 817–83 Specification for Metallic-Coated Steel Wire for Chain Link Fence Fabric, **01.06**
A 818–83 Specification for Coppered Carbon Steel Wire, **01.06**

B. NONFERROUS METALS

B 1–81 Specification for Hard-Drawn Copper Wire, **02.03**
B 2–81 Specification for Medium-Hard-Drawn Copper Wire, **02.03**
B 3–74(1980) Specification for Soft or Annealed Copper Wire, **02.03**
B 4 Discontinued
B 5–83a Specification for Electrolytic Tough-Pitch Copper Refinery Shapes, **02.01, 02.03, 02.04**
B 6–77(1983) Specification for Zinc (Slab Zinc), **02.02, 02.03, 02.04, 02.05**
B 7 Discontinued—Replaced by B 30
B 8–81 Specification for Concentric-Lay-Stranded Copper Conductors, Hard, Medium-Hard, or Soft, **02.03**
B 9–76(1980) Specification for Bronze Trolley Wire, **02.03**
B 10 Discontinued
B 11 Discontinued
B 12 Discontinued—Replaced by B 133
B 13 Discontinued
B 14 Discontinued
B 15 Discontinued—Replaced by B 124
B 16–83 Specification for Free-Cutting Brass Rod, Bar, and Shapes for Use in Screw Machines, **02.01**
B 16M–83 Specification for Free-Cutting Brass Rod, Bar, and Shapes for Use in Screw Machines [Metric], **02.01**
B 17 Discontinued—Replaced by B 66, B 67
B 18 Discontinued—Replaced by E 46, E 57
B 19–83 Specification for Cartridge Brass Sheet, Strip, Plate, Bar, and Disks (Blanks), **02.01**
B 20 Discontinued—Combined with B 19
B 21–83b Specification for Naval Brass Rod, Bar, and Shapes, **02.01**
B 21M–83b Specification for Naval Brass, Rod, Bar, and Shapes [Metric], **02.01**
B 22–82 Specification for Bronze Castings for Bridges and Turntables, **02.01**
B 23–83 Specification for White Metal Bearing Alloys (Known Commercially as "Babbitt Metal"), **02.04**
B 24 Discontinued
B 25 Discontinued—Replaced by B 209
B 26–82b Specification for Aluminum-Alloy Sand Castings, **02.02**
B 27 Discontinued—Replaced by E 54
B 28 Discontinued—Replaced by E 54
B 29–79(1984) Specification for Pig Lead, **02.03, 02.04**
B 30–83 Specification for Copper-Base Alloys in Ingot Form, **02.01, 02.02**
B 31 Discontinued—Replaced by B 30
B 32–83 Specification for Solder Metal, **02.04**
B 33–81 Specification for Tinned Soft or Annealed Copper Wire for Electrical Purposes, **02.03**
B 34 Redesignated E 53
B 35 Discontinued—Replaced by E 37
B 36–77(1983) Specification for Brass Plate, Sheet, Strip, and Rolled Bar, **02.01**
B 37–60(1984) Specification for Aluminum for Use in Iron and Steel Manufacture, **02.02**
B 38 Discontinued—Replaced by E 40
B 39–79 Specification for Nickel, **02.04**
B 40 Discontinued—Replaced by E 34
B 41 Discontinued—Replaced by E 39
B 42–84 Specification for Seamless Copper Pipe, Standard Sizes, **02.01**
B 43–84 Specification for Seamless Red Brass Pipe, Standard Sizes, **02.01**
B 44 Discontinued—Replaced by B 111
B 45 Discontinued—Replaced by E 36, E 54
B 46 Discontinued—Replaced by E 54
B 47–64(1980) Specification for Copper Trolley Wire, **02.03**
B 48–68(1983) Specification for Soft Rectangular and Square Bare Copper Wire for Electrical Conductors, **02.03**
B 49–78(1983) Specification for Hot-Rolled Copper Rods for Electrical Purposes, **02.03**
B 50 Discontinued
B 51 Discontinued
B 52 Discontinued—Replaced by B 644
B 53 Discontinued—Replaced by B 644
B 54 Discontinued—Replaced by B 132, B 147
B 55 Discontinued
B 56 Discontinued—Replaced by B 111
B 57 Discontinued—Replaced by B 171
B 58 Discontinued—Replaced by B 179
B 59 Discontinued—Replaced by B 148
B 60 Discontinued—Replaced by B 143
B 61–82a Specification for Steam or Valve Bronze Castings, **02.01**
B 62–82a Specification for Composition Bronze or Ounce Metal Castings, **02.01**
B 63–81 Test Method for Resistivity of Metallically Conducting Resistance and Contact Materials, **03.04**
B 64 Discontinued—Replaced by B 260
B 65 Discontinued—Replaced by B 146
B 66–82 Specification for Bronze Castings in the Rough for Locomotive Wearing Parts, **02.01**
B 67–82 Specification for Car and Tender Journal Bearings, Lined, **02.01, 02.04**
B 68–83 Specification for Seamless Copper Tube, Bright Annealed, **02.01**
B 68M–84 Specification for Seamless Copper Tube, Bright Annealed (Metric), **02.01**
B 69–66(1979) Specification for Rolled Zinc, **02.04**
B 70–81 Specification for Change of Resistance with Temperature of Metallic Materials for Electrical Heating, **03.04**
B 71 Discontinued—Replaced by E 38
B 72 Discontinued
B 73 Discontinued—Replaced by B 260
B 74 Discontinued—Replaced by B 144
B 75–83 Specification for Seamless Copper Tube, **02.01, 02.03**
B 75M–84 Specification for Seamless Copper Tube (Metric), **02.01**
B 76–81 Method for Accelerated Life Test of Nickel-Chromium and Nickel-Chromium-Iron Alloys for Electrical Heating, **03.04**
B 77–81 Test Method for Thermoelectric Power of Electrical-Resistance Alloys, **03.04**
B 78–81 Method for Accelerated Life Test of Iron-Chromium-Aluminum Alloys for Electrical Heating, **03.04**
B 79 Discontinued—Replaced by B 209
B 80–80 Specification for Magnesium-Alloy Sand Castings, **02.02**
B 81 Redesignated E 56
B 82 Discontinued—Replaced by B 344
B 83 Discontinued—Replaced by B 344
B 84–70(1981) Test Method for Temperature-Resistance Constants of Alloy Wires for Precision Resistors, **03.04**
B 85–84 Specification for Aluminum-Alloy Die Castings, **02.02**
B 86–83 Specification for Zinc-Alloy Die Castings, **02.02**
B 87 Discontinued—Replaced by B 8
B 88–83a Specification for Seamless Copper Water Tube, **02.01**
B 88M–83 Specification for Seamless Copper Water Tube [Metric], **02.01**
B 89 Discontinued—Replaced by B 211
B 90–81 Specification for Magnesium-Alloy Sheet and Plate, **02.02**
B 91–81 Specification for Magnesium-Alloy Forgings, **02.02**
B 92–80 Specification for Magnesium Ingot and Stick for Remelting, **02.02**
B 92M–83 Specification for Magnesium Ingot and Stick for Remelting [Metric], **02.02**
B 93–76 Specification for Magnesium Alloys in Ingot Form for Sand Castings, Permanent Mold Castings, and Die Castings, **02.02**
B 94–82 Specification for Magnesium-Alloy Die Castings, **02.02**
B 95–39(1979) Test Method for Linear Expansion of Metals, **03.01, 14.02**
B 96–84 Specification for Copper-Silicon Alloy Plate Sheet, Strip, and Rolled Bar for General Purposes and Pressure Vessels, **02.01**
B 97 Discontinued (To be combined with B 96)
B 98–83 Specification for Copper-Silicon Alloy Rod, Bar, and Shapes, **02.01**
B 99–81a Specification for Copper-Silicon Alloy Wire for General Purposes, **02.01**
B 99M–83 Specification for Copper-Silicon Alloy Wire for General Purposed (Metric), **02.01**
B 100–81 Specification for Rolled Copper-Alloy Bearing and Expansion Plates and Sheets for Bridge and Other Structural Uses, **02.01**
B 101–83 Specification for Lead-Coated Copper Sheets, **02.01, 02.04**
B 102–76(1980) Specification for Lead and Tin Alloy Die Castings, **02.02**

Brass) Rod (Metric), **02.01**

B 454 Discontinued—Replaced by B 695 and B 696

B 455–83 Specification for Copper-Zinc-Lead Alloy (Leaded Brass) Extruded Shapes, **02.01**

B 456–79 Specification for Electrodeposited Coatings of Copper Plus Nickel Plus Chromium and Nickel Plus Chromium, **02.05**

B 457–67(1980) Method for Measurement of Impedance of Anodic Coatings on Aluminum, **02.02, 02.05**

B 458–83a Specification for Sintered Nickel Silver Structural Parts, **02.05**

B 459 Discontinued

B 460–68(1980) Test Method for Dynamic Coefficient of Friction and Wear of Sintered Metal Friction Materials Under Dry Conditions, **02.05**

B 461–67(1980) Test Method for Frictional Characteristics of Sintered Metal Friction Materials Run in Lubricants, **02.05**

B 462–82 Specification for Forged or Rolled Chromium-Nickel-Iron-Molybdenum-Copper-Columbium Stabilized Alloy (UNS N08020) Pipe Flanges, Forged Fittings, and Valves and Parts for Corrosive High-Temperature Ser **02.04**

B 463–83 Specification for Chromium-Nickel-Iron-Molybdenum-Copper-Columbium Stabilized Alloy (UNS N08020) Plate, Sheet, and Strip, **02.04**

B 464–83 Specification for Welded Chromium-Nickel-Iron-Molybdenum-Copper-Columbium Stabilized Alloy (UNS N08020) Pipe, **02.04**

B 465–83 Specification for Copper-Iron Alloy Plate, Sheet, Strip, and Rolled Bar, **02.01**

B 466–83a Specification for Seamless Copper-Nickel Pipe and Tube, **02.01**

B 466M–84 Specification for Seamless Copper-Nickel Pipe and Tube [Metric], **02.01**

B 467–83 Specification for Welded Copper-Nickel Pipe, **02.01**

B 468–83 Specification for Welded Chromium-Nickel-Iron-Molybdenum-Copper-Columbium Stabilized Alloy (UNS N08020) Tubes, **02.04**

B 469–77 Specification for Seamless Copper Alloy Tubes for Pressure Applications, **02.01**

B 470–68(1978) Specification for Bonded Copper Conductors for Use in Hookup Wire for Electronic Equipment, **02.03**

B 471–79 Specification for Chromium-Nickel-Iron-Molybdenum-Copper-Columbium Stabilized Alloy (UNS N08020) Round Spring Wire, **02.04**

B 472–79 Specification for Chromium-Nickel-Iron-Molybdenum-Copper-Columbium Stabilized Alloy (UNS N08020) Billets and Bars for Reforging, **02.04**

B 473–82 Specification for Chromium-Nickel-Iron-Molybdenum-Copper-Columbium Stabilized Alloy (UNS N08020) Bar and Wire, **02.04**

B 474–82 Specification for Electric Fusion Welded Chromium-Nickel-Iron-Molybdenum-Copper-Columbium Stabilized Alloy (UNS N08020) Pipe, **02.04**

B 475–79 Specification for Chromium-Nickel-Iron-Molybdenum-Copper-Columbium Alloy (UNS N08020) Round Weaving Wire, **02.04**

B 476–72(1978) Specification for General Requirements for Wrought Precious Metal Electrical Contact Materials, **03.04**

B 477–82 Specification for Gold-Silver-Nickel Electrical Contact Alloy, **03.04**

B 478–79 Test Method for Cross Curvature of Thermostat Metals, **03.04**

B 479–82a Specification for Annealed Aluminum Foil for Flexible Barrier Applications, **02.02, 15.09**

B 480–68(1980) Practice for Preparation of Magnesium and Magnesium Alloys for Electroplating, **02.05**

B 481–68(1979) Practice for Preparation of Titanium and Titanium Alloys for Electroplating, **02.05**

B 482–68(1979) Practice for Preparation of Tungsten and Tungsten Alloys for Electroplating, **02.05**

B 483–83 Specification for Aluminum and Aluminum-Alloy Drawn Tubes for General Purpose Applications, **02.02**

B 483M–83 Specification for Aluminum and Aluminum-Alloy Drawn Tubes for General-Purpose Applications [Metric], **02.02**

B 484–83a Specification for Sintered Nickel Steel Structural Parts, **02.05**

B 485 Discontinued

B 486–74(1980) Specification for Paste Solder, **02.04**

B 487–79 Method for Measurement of Metal and Oxide Coating Thicknesses by Microscopical Examination of a Cross Section, **02.05**

B 488–80 Specification for Electrodeposited Coatings of Gold for Engineering Uses, **02.05, 03.04**

B 489–68(1979) Practice for Bend Test for Ductility of Electrodeposited and Autocatalytically Deposited Metal Coatings on Metals, **02.05**

B 490–68(1980) Practice for Micrometer Bend Test for Ductility of Electrodeposits, **02.05**

B 491–83 Specification for Aluminum-Alloy Extruded Round Tubes for General Purpose Applications, **02.02**

B 491M–83 Specification for Aluminum and Aluminum-Alloy Extruded Round Tubes for General Purpose Applications [Metric], **02.02**

B 492–82 Specification for Cast Copper-Nickel Ship Tailshaft Sleeves, **02.01**

B 493–83 Specification for Zirconium and Zirconium Alloy Forgings, **02.04**

B 494–79 Specification for Primary Zirconium, **02.04**

B 495–79 Specification for Zirconium and Zirconium Alloy Ingots, **02.04**

B 496–81 Specification for Compact Round Concentric-Lay-Stranded Copper Conductors, **02.03**

B 497–79 Practice for Measuring Voltage Drop on Closed Arcing Contacts, **03.04**

B 498–74(1979) Specification for Zinc-Coated (Galvanized) Steel Core Wire for Aluminum Conductors, Steel Reinforced (ACSR), **01.06, 02.03**

B 498M–83 Specification for Zinc-Coated (Galvanized) Steel Core Wire for Aluminum Conductors, Steel Reinforced (ACSR) [Metric], **01.06, 02.03**

B 499–75(1980) Method for Measurement of Coating Thicknesses by the Magnetic Method: Nonmagnetic Coatings on Magnetic Basis Metals, **02.05**

B 500–72(1982) Specification for Zinc-Coated (Galvanized) and Aluminum-Coated (Aluminized) Stranded Steel Core for Aluminum Conductors, Steel Reinforced (ACSR), **02.03**

B 501–69(1983) Specification for Silver-Coated Copper-Clad Steel Wire for Electronic Application, **02.03**

B 502–70(1980) Specification for Aluminum-Clad Steel Core Wire for Aluminum Conductors, Aluminum-Clad Steel Reinforced, **02.03**

B 503–69(1984) Recommended Practice for Use of Copper and Nickel Electroplating Solutions for Electroforming, **02.05**

B 504–82 Method for Measurement of Thickness of Metallic Coatings by the Coulometric Method, **02.05**

B 505–84 Specification for Copper-Base Alloy Continuous Castings, **02.01**

B 506–81 Specification for Copper-Clad Stainless Steel Sheet and Strip for Building Construction, **02.01**

B 507–70(1979) Practice for Design of Articles to Be Electroplated on Racks with Nickel, **02.05**

B 508–81 Specification for Copper Alloy Strip for Flexible Metal Hose, **02.01**

B 509–77(1983) Specification for Supplementary Requirements for Nickel Alloy Plate for Nuclear Applications, **02.04, 12.01**

B 510–77(1983) Specifications for Supplementary Requirements for Nickel Alloy Rod and Bar for Nuclear Applications, **02.04, 12.01**

B 511–81 Specification for Nickel-Iron-Chromium-Silicon Alloy Bars and Shapes, **02.04**

B 512–81 Specification for Nickel-Iron-Chromium-Silicon Alloy (UNS N08330) Billets and Bars, **02.04**

B 513–79 Specifications for Supplementary Requirements for Nickel Alloy Seamless Pipe and Tube for Nuclear Applications, **02.04, 12.01**

B 514–79 Specification for Welded Nickel-Iron-Chromium Alloy Pipe, **02.04**

B 515–79 Specification for Welded Nickel-Iron-Chromium Alloy (UNS N08800) Tubes, **02.04**

B 516–79 Specification for Welded Nickel-Chromium-Iron Alloy (UNS N06600) Tubes, **02.04**

B 517–79 Specification for Welded Nickel-Chromium-Iron-Alloy (UNS N06600) Pipe, **02.04**

B 518–81 Specification for Nickel-Chromium-Iron-Columbium-Molybdenum-Tungsten Alloy (UNS N06102) Rod and Bar, **02.04**

B 519–81 Specification for Nickel-Chromium-Iron-Columbium-Molybdenum-Tungsten Alloy (UNS N06102) Plate, Sheet, and Strip, **02.04**

B 520–70(1980) Specification for Tin-Coated Copper-Clad Steel Wire for Electronic Applications, **02.03**

B 521–82 Specification for Tantalum and Tantalum Alloy Seamless and Welded Tube, **12.01**

B 522–80 Specification for Gold-Silver-Platinum Electrical Contact Alloy, **03.04**

B 523–79 Specification for Seamless and Welded Zirconium and Zirconium Alloy Tubes for Condensers and Heat Exchangers, **02.04**

B 524–78 Specification for Concentric-Lay-Stranded Aluminum Conductors, Aluminum Alloy Reinforced (ACAR, 1350/6201), **02.03**

B 524M–82 Specification for Concentric-Lay-Stranded Aluminum Conductors, Aluminum Alloy Reinforced (ACAR, 1350/6201) [Metric], **02.03**

B 525–83a Specification for Sintered Austenitic Stainless Steel Structural Parts, **02.05**

B 526–70(1980) Test Method for Coefficient of Friction and Wear of Sintered Metals Friction Materials Under Dry Clutch Conditions, **02.05**

B 527–81 Test Method for Tap Density of Powders of Refractory Metals and Compounds by Tap-Pak Volumeter, **02.05**

B 528–83a Test Method for Transverse Rupture Strength of Sintered Metal Powder Specimens, **02.05**

B 529 Discontinued—Replaced by B 244

B 530–75(1980) Method for Measurement of Coating Thicknesses by the Magnetic Method: Electrodeposited Nickel Coatings on Magnetic and Nonmagnetic Substrates, **02.05**

B 531–78 Specification for Aluminum-Alloy 5005 Redraw Rod for Electrical Purposes, **02.03**

B 532–79 Specification for the Appearance of Electroplated Plastic Surfaces, **02.05**

B 533–79 Test Method for Peel Strength of Metal—Electroplated Plastics, **02.05**

B 534–83 Specification for Copper-Cobalt-Beryllium Alloy and Copper-Nickel-Beryllium Alloy Plate, Sheet, Strip, and Rolled Bar, **02.01**

B 535–82 Specification for Nickel-Iron-Chromium-Silicon Alloy (UNS N08330) Seamless and Welded Pipe, **02.04**

B 536–83 Specification for Nickel-Iron-Chromium-Silicon Alloy (UNS N08330 and N08332) Plate, Sheet, and Strip, **02.04**

B 537–70(1981) Recommended Practice for Rating of Electroplated Panels Subjected to Atmospheric Exposure, **02.05**

B 538–70(1979) Method of Testing FACT (Ford Anodized Aluminum Corrosion Test), **02.05**

B 539–80 Method for Measuring Contact Resistance of Electrical Connections (Static Contacts), **03.04**

B 540–80 Specification for Palladium Electrical Contact Alloy, **03.04**

B 541–78 Specification for Gold Electrical Contact Alloy, **03.04**

B 542–81 Definitions of Terms Relating to Electrical Contacts and Their Use, **03.04**

B 543–83d Specification for Welded Copper and Copper-Alloy Heat Exchanger Tube, **02.01**

B 543M–84 Specification for Welded Copper and Copper Alloy Heat Exchanger Tube (Metric), **02.01**

B 544 Discontinued—Replaced by B 609

B 545–83 Specification for Electrodeposited Coatings of Tin, **02.05**

B 546–83 Specification for Electric Fusion Welded Ni-Fe-Cr-Si Alloy (UNS N08330) Pipe, **02.04**

B 547–82a Specification for Aluminum-Alloy Formed and Arc-Welded Round Tube, **02.02**

B 548–82 Method and Specification for Ultrasonic Inspection of Aluminum-Alloy Plate for Pressure Vessels, **02.02**

B 549–82 Specification for Aluminum Conductors, Concentric-Lay-Stranded, Aluminum-Clad, Steel-Reinforced (ACSR/AW), **02.03**

B 550–83 Specification for Zirconium and Zirconium Bar and Wire, **02.04**

B 551–83 Specification for Zirconium and Zirconium Alloy Strip, Sheet, and Plate, **02.04**

B 552–84 Specification for Seamless and Welded Copper-Nickel Tubes for Water Desalting Plants, **02.01**

B 553–79 Test Method for Thermal Cycling of Electrooplated Plastics, **02.05**

B 554–78 Recommended Practice for Measurement of Thickness of Metallic Coatings on Nonmetallic Substrates, **02.05**

B 555–75(1980) Guidelines for Measurement of Electrodeposited Metallic Coating Thicknesses by the Dropping Test, **02.05**

B 556–84 Guidelines for Measurement of Thin Chromium Coatings by the Spot Test, **02.05**

B 557–84 Method of Tension Testing Wrought and Cast Aluminum- and Magnesium-Alloy Products, **02.02, 03.01**

B 557M–84 Method of Tension Testing Wrought and Cast Aluminum- and Magnesium-Alloy Products [Metric], **02.02, 03, 01**

B 558–79 Practice for Preparation of Nickel Alloys for Electroplating, **02.05**

B 559–72(1983) Specification for Nickel-Coated, Copper-Clad Steel Wire for Electronic Application, **02.03**

B 560–79 Specification for Modern Pewter Alloys, **02.04**

B 561–73(1984) Specification for Refined Platinum, **02.04**

B 562–73(1979) Specification for Refined Gold, **02.04**

B 563–72(1978) Specification for Palladium-Silver-Copper Electrical Contact Alloy, **03.04**

B 564–82 Specification for Nickel Alloy Forgings, **02.04**

B 565–76(1981) Method for Shear Testing of Aluminum and Aluminum-Alloy Rivets and Cold-Heading Wire and Rods, **02.02, 03.01**

B 566–72(1983) Specification for Copper-Clad Aluminum Wire, **02.03**

B 567–84 Method for Measurement of Coating Thickness by the Beta Backscatter Method, **02.05**

B 568–84 Method for Measurement of Coating Thickness by X-Ray Spectrometry, **02.05**

B 569–81 Specification for UNS No. C 26000 Brass Strip in Narrow Widths and Light Gage for Heat-Exchanger Tubing, **02.01**

B 570–83b Specification for Copper-Beryllium Alloy Forgings and Extrusions, **02.01**

B 571–79 Test Methods for Adhesion of Metallic Coatings, **02.05**

B 572–83 Specification for Nickel-Chromium-Molybdenum-Iron Alloy (UNS N06002) Rod, **02.04**

B 573–83 Specification for Nickel-Molybdenum-Chromium-Iron Alloy (UNS N10003) Rod, **02.04**

B 574–83 Specification for Low-Carbon Nickel-Molybdenum-Chromium Alloy Rod, **02.04**

B 575–83a Specification for Low-Carbon Nickel-Molybdenum-Chromium Alloy Plate, Sheet, and Strip, **02.04**

B 576–79 Guidelines for Arc Errosion Testing of Electrical Contacts, **03.04**

B 577–82 Test Method for Hydrogen Embrittlement of Copper, **02.01**

B 578–80 Test Method for Microhardness of Electroplated Coatings, **02.05, 03.04**

B 579–73(1982) Specification for Electrodeposited Coatings of Tin-Lead Alloy (Solder Plate), **02.05**

B 580–79 Specification for Anodic Oxide Coatings on Aluminum, **02.05**

B 581–81 Specification for Nickel-Chromium-Iron-Molybdenum-Copper Alloy Rod, **02.04**

B 582–81 Specification for Nickel-Chromium-Iron-Molybdenum-Copper Alloy Plate, Sheet, and Strip, **02.04**

B 583–83 Test Methods for Porosity in Gold Coatings on Metal Substrates, **02.05, 03.04**

B 584–83 Specification for Copper Alloy Sand Castings for General Applications, **02.01**

B 585–83 Specification for Seamless Copper-Alloy Water Tube, **02.01**

B 586–83 Specification for Welded Copper-Alloy Water Tube, **02.01**

B 587–80 Specification for Welded Brass Tube, **02.01**

B 588–75(1981) Method for Measurement of Thickness of Transparent or Opaque Coatings by Double-Beam Interference Microscope Technique, **02.05**

B 589–82 Specification for Refined Palladium, **02.04**

B 590 Discontinued

B 591–83 Specification for Copper-Zinc-Tin Alloys Plate, Sheet, Strip, and Rolled Bar, **02.01**

B 592–82 Specification for Copper-Zinc-Aluminum-(Cobalt or Nickel)-Alloy Plate, Sheet, Strip, and Rolled Bar, **02.01**

B 593–73(1980) Recommended Practice for Conducting Bending Fatigue Tests for Copper-Alloy Spring Materials, **02.01**

B 594–82 Method for Ultrasonic Inspection of Aluminum-Alloy Products for Aerospace Applications, **02.02**

B 595–73(1979) Specification for Sintered Aluminum Structural Parts, **02.05**

B 596–73(1978) Specification for Gold-Copper Alloy Electrical Contact Material, **03.04**

B 597–83 Practice for Heat Treatment of Aluminum Alloys, **02.02**

B 598–74(1980) Recommended Practice for Determining Offset Yield Strength for Copper Alloys, **02.01**

B 599–80 Specification for Nickel-Iron-Chromium-Molybdenum-Columbium Stabilized Alloy (UNS N08700) Plate, Sheet, and Strip, **02.04**

B 600–74 Recommended Practice for Descaling and Cleaning Titanium and Titanium Alloy Surfaces, **02.04, 12.01**

B 601–83a Recommended Practice for Temper Designations for Copper and Copper Alloys—Wrought and Cast, **02.01**

B 602–84 Method for Attribute Sampling of Electrodeposited Metallic Coatings and Related Finishes, **02.05**

B 603–77 Specification for Drawn or Rolled Iron-Chromium-Aluminum Alloys for Electrical Heating Elements, **03.04**

B 604–80 Specification for Decorative Electroplated Coatings of Copper/Nickel/Chromium on Plastic, **02.05**

B 605–75(1982) Specification for Electrodeposited Coatings of Tin-Nickel Alloy, **02.05**

B 606–79 Specification for High-Strength Zinc-Coated (Galvanized) Steel Core Wire for Aluminum and Aluminum Alloy Conductors, Steel Reinforced, **01.06, 02.03**

B 607 Not Yet Assigned

B 608–82 Specification for Welded Copper-Alloy Pipe, **02.01**

B 609–81 Specification for Aluminum 1350 Round Wire, Annealed and Intermediate Tempers, for Electrical

EXHIBIT 13

1985 Annual Book of ASTM Standards

Index

C 324–82 Test Method for Free Moisture in Ceramic Whiteware Clays, **15.02**
C 325–81 Method for Wet Sieve Analysis of Ceramic Whiteware Clays, **15.02**
C 326–82 Test Method for Drying and Firing Shrinkages of Ceramic Whiteware Clays, **15.02**
C 327 Discontinued—Replaced by C 539
C 328 Discontinued—Replaced by C 674
C 329–75(1981) Test Method for Specific Gravity of Fired Ceramic Whiteware Materials, **15.02**
C 330–85 Specification for Lightweight Aggregates for Structural Concrete, **04.02**
C 331–81 Specification for Lightweight Aggregates for Concrete Masonry Units, **04.02, 04.05**
C 332–83 Specification for Lightweight Aggregates for Insulating Concrete, **04.02**
C 333 Discontinued—Replaced by C 517
C 334 Discontinued—Replaced by C 517
C 335–84 Test Method for Steady-State Heat Transfer Properties of Horizontal Pipe Insulations, **04.06**
C 336–71(1981) Test Method for Annealing Point and Strain Point of Glass by Fiber Elongation, **15.02**
C 337 Discontinued—Replaced by E 228
C 338–73(1983) Test Method for Softening Point of Glass, **15.02**
C 339 Discontinued—Replaced by C 640
C 340 Discontinued—Replaced by C 595
C 341–84 Test Method for Length Change of Drilled or Sawed Specimens of Cement Mortar and Concrete, **04.02**
C 342–79 Test Method for Potential Volume Change of Cement-Aggregate Combinations, **04.02**
C 343 Discontinued—Replaced by C 552
C 344 Discontinued—Replaced by C 533
C 345 Discontinued—Replaced by C 533
C 346–76(1981) Test Method for 45-deg Specular Gloss of Ceramic Materials, **15.02**
C 347–57(1983) Test Method for Reflectivity and Coefficient of Scatter of White Porcelain Enamels, **15.02**
C 348–80(1984) Test Method for Flexural Strength of Hydraulic Cement Mortars, **04.01**
C 349–82 Test Method for Compressive Strength of Hydraulic Cement Mortars (Using Portions of Prisms Broken in Flexure), **04.01**
C 350 Discontinued—Replaced by C 618
C 351–82 Test Method for Mean Specific Heat of Thermal Insulation, **04.06**
C 352 Discontinued—Replaced by C 640
C 353–84 Test Method for Adhesion of Dried Thermal Insulating or Finishing Cement, **04.06**
C 354–84 Test Method for Compressive Strength of Thermal Insulating or Finishing Cement, **04.06**
C 355 Discontinued—Replaced by E 96
C 356–60(1980) Test Method for Linear Shrinkage of Preformed High-Temperature Thermal Insulation Subjected to Soaking Heat, **04.06**
C 357–70(1976) Test Method for Bulk Density of Granular Refractory Materials, **15.01**
C 358 Discontinued—Replaced by C 595
C 359–83 Test Method for Early Stiffening of Portland Cement (Mortar Method), **04.01**
C 360–82 Test Method for Ball Penetration in Fresh Portland Cement Concrete, **04.03**
C 361–83a Specification for Reinforced Concrete Low-Head Pressure Pipe, **04.05**
C 361M–83a Specification for Reinforced Concrete Low-Head Pressure Pipe [Metric], **04.05**
C 362 Discontinued
C 363–57(1980) Test Method for Delamination Strength of Honeycomb Type Core Material, **15.03**
C 364–61(1980) Test Method for Edgewise Compressive Strength of Flat Sandwich Constructions, **15.03**
C 365–57(1980) Test Method for Flatwise Compressive Strength of Sandwich Cores, **15.03**
C 366–57(1980) Method for Measurement of Thickness of Sandwich Cores, **15.03**
C 367–78(1984) Test Methods for Strength Properties of Prefabricated Architectural Acoustical Tile or Lay-in Ceiling Panels, **04.06**
C 368–77(1982) Test Method for Impact Resistance of Ceramic Tableware, **15.02**
C 369 Discontinued—Replaced by C 674
C 370–56(1981) Test Method for Moisture Expansion of Fired Whiteware Products, **15.02**
C 371–77(1981) Method for Wire-Cloth Sieve Analysis of Nonplastic Ceramic Powders, **15.02**
C 372–81 Test Method for Linear Thermal Expansion of Porcelain Enamel and Glaze Frits and Fired Ceramic Whiteware Products by the Dilatometer Method, **15.02**
C 373–72(1982) Test Method for Water Absorption, Bulk Density, Apparent Porosity, and Apparent Specific Gravity of Fired Whiteware Products, **15.02**
C 374–70(1982) Test Methods for Fusion Flow of Porcelain Enamel Frits (Flow-Button Methods), **15.02**
C 375–58(1979) Classification of Water Used in Milling of Porcelain Enamel, **15.02**
C 376 Discontinued
C 377 Discontinued
C 378 Discontinued—Replaced by C 612
C 379 Discontinued—Replaced by C 593
C 380 Discontinued—Replaced by C 514
C 381 Discontinued—Replaced by C 552
C 382 Discontinued—Replaced by C 553
C 383–84 Test Method for Wet Adhesion of Thermal Insulating Cements to Metal, **04.06**
C 384–77(1981) Test Method for Impedance and Absorption of Acoustical Materials by the Impedance Tube Method, **04.06**
C 385–58(1983) Test Method for Thermal Shock Resistance of Porcelain-Enameled Utensils, **15.02**
C 386–83 Recommended Practice for Use of Chemical-Resistant Sulfur Mortars, **04.05**
C 387–83 Specification for Packaged, Dry, Combined Materials for Mortar and Concrete, **04.02**
C 388 Discontinued
C 389 Discontinued
C 390–79(1984) Criteria for Sampling and Acceptance of Preformed Thermal Insulation Lots, **04.06**
C 391 Discontinued
C 392 Discontinued—Replaced by C 612
C 393–62(1980) Method for Flexure Test of Flat Sandwich Constructions, **15.03**
C 394–62(1980) Test Method for Shear Fatigue of Sandwich Core Materials, **15.03**
C 395–80 Specification for Chemical-Resistant Resin Mortars, **04.05**
C 396 Discontinued—Replaced by C 579
C 397–83 Recommended Practice for Use of Chemically Setting Chemical-Resistant Silicate and Silica Mortars, **04.05**
C 398–79 Recommended Practice for Use of Hydraulic Cement Mortars in Chemical-Resistant Masonry, **04.05**
C 399–74(1980) Recommended Practice for Use of Chemical-Resistant Resin Mortars, **04.05**
C 400–64(1981) Methods of Testing Quicklime and Hydrated Lime for Neutralization of Waste Acid, **04.01**
C 401–84 Classification of Castable Refractories, **15.01**
C 402 Discontinued—Replaced by C 618
C 403–85 Test Method for Time of Setting of Concrete Mixtures by Penetration Resistance, **04.02**
C 404–85 Specification for Aggregates for Masonry Grout, **04.02, 04.05**
C 405–82 Practice for Estimating Consistency of Wet-Mixed Thermal Insulating Cement, **04.06**
C 406–84 Specification for Roofing Slate, **04.08**
C 407 Discontinued—Replaced by C 773
C 408–82 Test Method for Thermal Conductivity of Whiteware Ceramics, **15.02**
C 409–79 Test Method for Torsion Resistance of Laboratory Specimens of Porcelain Enameled Iron and Steel, **15.02**
C 410–60(1978) Specification for Industrial Floor Brick, **04.05**
C 411–82 Test Method for Hot-Surface Performance of High-Temperature Thermal Insulation, **04.06**
C 412–83 Specification for Concrete Drain Tile, **04.05**
C 412M–83 Specification for Concrete Drain Tile [Metric], **04.05**
C 413–83 Test Method for Absorption of Chemical-Resistant, Mortars, Grouts, and Monolithic Surfacings, **04.05**
C 414–83 Test Methods for Working, Setting, and Curing Times of Chemically Setting Chemical-Resistant Silicate and Silica Mortars, **04.05**
C 415 Discontinued—Replaced by C 911
C 416–84 Classification of Silica Refractory Brick, **15.01**
C 417–84 Test Method for Thermal Conductivity of Unfired Monolithic Refractories, **15.01**
C 418–81 Test Method for Abrasion Resistance of Concrete by Sandblasting, **04.02**
C 419–81 Practice for Making and Curing Test Specimens of Mastic Thermal Insulation Coatings, **04.06**
C 420 Discontinued
C 421–83 Test Method for Tumbling Friability of Preformed Block-Type Thermal Insulation, **04.06**
C 422 Discontinued
C 423–84a Test Method for Sound Absorption and Sound Absorption Coefficients by the Reverberation Room Method, **04.06**
C 424–80 Test Method for Crazing Resistance of Fired Glazed Whitewares by Autoclave Treatment, **15.02**

C 425–77(1982) Specification for Compression Joints for Vitrified Clay Pipe and Fittings, **04.05**
C 426–70(1982) Test Method for Drying Shrinkage of Concrete Block, **04.05**
C 427 Discontinued
C 428–81 Specification for Asbestos-Cement Nonpressure Sewer Pipe, **04.05**
C 429–82 Method for Sieve Analysis of Raw Materials for Glass Manufacture, **15.02**
C 430–83 Test Method for Fineness of Hydraulic Cement by the 45-μm (No. 325) Sieve, **04.01**
C 431 Discontinued
C 432 Discontinued—Replaced by C 593
C 433 Discontinued—Replaced by C 911
C 434–61(1981) Specification for Insulating Firebrick for Linings of Industrial Furnaces Operated with a Neutral or Oxidizing Atmosphere (Intent to Withdraw), **15.01**
C 435–84 Classification of Steel Pouring Pit Refractories, **15.01**
C 436–83 Test Method for Reheat Change of Carbon Refractory Brick and Shapes, **15.01**
C 437 Discontinued—Replaced by C 134
C 438 Discontinued—Replaced by C 417
C 439–61(1984) Test Method for Resistance to Thermal Spalling of Silica Brick, **15.01**
C 440 Discontinued
C 441–81 Test Method for Effectiveness of Mineral Admixtures in Preventing Excessive Expansion of Concrete Due to the Alkali-Aggregate Reaction, **04.02**
C 442–84a Specification for Gypsum Backing Board and Coreboard, **04.01**
C 443–79 Specification for Joints for Circular Concrete Sewer and Culvert Pipe, Using Rubber Gaskets, **04.05**
C 443M–85 Specification for Joints for Circular Concrete Sewer and Culvert Pipe, Using Rubber Gaskets [Metric], **04.05**
C 444–80 Specification for Perforated Concrete Pipe, **04.05**
C 444M–80a Specification for Perforated Concrete Pipe [Metric], **04.05**
C 445 Discontinued
C 446–82 Test Method for Breaking Load and Calculated Modulus of Rupture of Preformed Insulation of Pipes, **04.06**
C 447–85 Practice for Estimating the Maximum Use Temperature of Preformed Homogeneous Thermal Insulations, **04.06**
C 448–81 Test Methods for Abrasion Resistance of Porcelain Enamels, **15.02**
C 449–82 Specification for Mineral Fiber Hydraulic-Setting Thermal Insulating and Finishing Cement, **04.06**
C 450–76(1981) Recommended Practice for Prefabrication and Field Fabrication of Thermal Insulating Fitting Covers for NPS Piping, Vessel Lagging, and Dished Head Segments, **04.06**
C 451–83 Test Method for Early Stiffening of Portland Cement (Paste Method), **04.01**
C 452–85 Test Method for Potential Expansion of Portland Cement Mortars Exposed to Sulfate, **04.01**
C 453 Discontinued—Replaced by C 580
C 454–83 Recommended Practice for Disintegration of Carbon Refractories by Alkali, **15.01**
C 455–84 Classification of Chrome Brick, Chrome-Magnesite Brick, Magnesite-Chrome Brick, and Magnesite Brick, **15.01**
C 456–68(1984) Test Method for Hydration Resistance of Basic Brick, **15.01**
C 457–82 Recommended Practice for Microscopical Determination of Air-Void Content and Parameters of the Air-Void System in Hardened Concrete, **04.02**
C 458–62(1984) Test Method for Organic Fiber Content of Asbestos-Cement Products, **04.05**
C 459–63(1984) Methods of Sampling and Testing Asbestos-Cement Flat Sheets, Roofing and Siding Shingles, and Clapboards, **04.05**
C 460–84 Definitions of Terms Relating to Asbestos-Cement and Related Products, **04.05**
C 461–81 Methods of Testing Bituminous Mastic Coating Used in Conjunction with Thermal Insulation, **04.06**
C 462 Discontinued—Replaced by C 700
C 463 Discontinued—Replaced by C 700
C 464–64(1983) Test Method for Corrosion Effect of Thermal Insulating Cements on Base Metal, **04.06**
C 465–85a Specification for Processing Additions for Use in the Manufacture of Hydraulic Cements, **04.01**
C 466–74(1979) Specification for Chemically Setting Silicate and Silica Chemical-Resistant Mortars, **04.05**
C 467–84 Classification of Mullite Refractories, **15.01**
C 468–70(1983) Classification of Granular Refractory Dolomite, **15.01**
C 469–83 Test Method for Static Modulus of Elasticity and Poisson's Ratio of Concrete in Compression, **04.02**
C 470–81 Specification for Molds for Forming Concrete Test Cylinders Vertically, **04.02**
C 471–76(1985) Method for Chemical Analysis of Gypsum and Gypsum Products, **04.01**
C 472–84 Method for Physical Testing of Gypsum Plasters and Gypsum Concrete, **04.01**
C 473–84a Methods for Physical Testing of Gypsum Board Products and Gypsum Lath, **04.01**
C 474–67(1978) Method for Testing Joint Treatment Materials for Gypsum Wallboard Construction, **04.01**
C 475–81 Specification for Joint Treatment Materials for Gypsum Wallboard Construction, **04.01**
C 476–83 Specification for Grout for Reinforced and Nonreinforced Masonry, **04.05**
C 477 Discontinued
C 478–84 Specification for Precast Reinforced Concrete Manhole Sections, **04.05**
C 478M–84 Specification for Precast Reinforced Concrete Manhole Sections [Metric], **04.05**
C 479–77 Specification for Vitrified Clay Liner Plates, **04.05**
C 480–62(1980) Test Method for Flexure Creep of Sandwich Constructions, **15.03**
C 481–62(1980) Test Method for Laboratory Aging of Sandwich Constructions, **15.03**
C 482–81 Test Method for Bond Strength of Ceramic Tile to Portland Cement, **15.02**
C 483–66(1981) Test Method for Electrical Resistance of Conductive Ceramic Tile, **15.02**
C 484–66(1981) Test Method for Thermal Shock Resistance of Glazed Ceramic Tile, **15.02**
C 485–83 Method for Measuring Warpage of Ceramic Tile, **15.02**
C 486 Discontinued—Replaced by C 703
C 487 Discontinued
C 488–83 Practice for Conducting Exterior Exposure Tests of Finishes for Thermal Insulation, **04.06**
C 489 Discontinued
C 490–83a Specification for Apparatus for Use in Measurement of Length Change of Hardened Cement Paste, Mortar, and Concrete, **04.01, 04.02**
C 491–72(1977) Test Method for Modulus of Rupture of Air-Setting Plastic Refractories, **15.01**
C 492–82 Test Method for Hydration of Granular Dead-Burned Refractory Dolomite, **15.01**
C 493–70(1976) Test Method for Bulk Density and Porosity of Granular Refractory Materials by Mercury Displacement, **15.01**
C 494–82 Specification for Chemical Admixtures for Concrete, **04.02**
C 495–83 Test Method for Compressive Strength of Lightweight Insulating Concrete, **04.02**
C 496–85 Test Method for Splitting Tensile Strength of Cylindrical Concrete Specimens, **04.02**
C 497–84a Method of Testing Concrete Pipe, Sections, or Tile, **04.05**
C 497M–84a Method of Testing Concrete Pipe, Sections, or Tile [Metric], **04.05**
C 498–65(1981) Specification for Perforated Clay Drain Tile, **04.05**
C 499–78(1984) Test Method for Facial Dimensions and Thickness of Flat, Rectangular Ceramic Wall and Floor Tile, **15.02**
C 500–84 Method of Testing Asbestos-Cement Pipe, **04.05**
C 501–84 Test Method for Relative Resistance to Wear of Unglazed Ceramic Tile by the Taber Abraser, **15.02**
C 502–78(1983) Test Method for Wedging of Flat, Rectangular Ceramic Wall and Floor Tile, **15.02**
C 503–79 Specification for Marble Building Stone (Exterior), **04.08**
C 504 Discontinued
C 505–80 Specification for Nonreinforced Concrete Irrigation Pipe with Rubber Gasket Joints, **04.05**
C 505M–80a Specification for Nonreinforced Concrete Irrigation Pipe with Rubber Gasket Joints [Metric], **04.05**
C 506–84b Specification for Reinforced Concrete Arch Culvert, Storm Drain, and Sewer Pipe, **04.05**
C 506M–84a Specification for Reinforced Concrete Arch Culvert, Storm Drain, and Sewer Pipe [Metric], **04.05**
C 507–84a Specification for Reinforced Concrete Elliptical Culvert, Storm Drain, and Sewer Pipe, **04.05**
C 507M–84a Specification for Reinforced Concrete Elliptical Culvert, Storm Drain, and Sewer Pipe [Metric], **04.05**
C 508–83 Specification for Asbestos-Cement Underdrain Pipe, **04.05**
C 509–84 Specification for Cellular Elastomeric Preformed Gasket and Sealing Material, **04.07, 09.02**
C 510–77(1983) Test Method for Staining and Color Change of Single- or Multicomponent Joint Sealants, **04.07**
C 511–80 Specification for Moist Cabinets, Moist Rooms and Water Storage Tanks Used in the Testing of Hydraulic Cements and Concretes, **04.01, 04.02**

D 1465–80 Test Method for Blocking and Picking Points of Petroleum Wax, **05.01, 15.09**
D 1466–67(1984) Methods for Sampling Liquid Oils, Fatty Acids, and Polymerized Fatty Acids Commonly Used in Paints, Varnishes, and Related Materials, **06.03**
D 1467–72(1981) Method of Testing Fatty Acids Used in Protective Coatings, **06.03**
D 1468–84 Test Method for Volatile Matter in Tricresyl Phosphate, **06.03**
D 1469–73(1981) Test Method for Total Rosin Acids Content of Coating Vehicles, **06.02**
D 1470 Discontinued—Replaced by D 1905
D 1471 Discontinued
D 1472 Discontinued
D 1473–80 Test Method for 2,6-Ditertiary-Butyl Para-Cresol in Electrical Insulating Oils, **10.03**
D 1474–68(1979) Test Methods for Indentation Hardness of Organic Coatings, **06.01**
D 1475–60(1980) Test Method for Density of Paint, Varnish, Lacquer, and Related Products, **06.01**
D 1476–84 Test Method for Heptane Miscibility of Lacquer Solvents, **06.03**
D 1477 Discontinued—Replaced by D 2386
D 1478–80 Test Method for Low-Temperature Torque of Ball Bearing Greases, **05.01**
D 1479–64(1978) Test Method for Emulsion Stability of Soluble Cutting Oils, **05.01**
D 1480–81 Test Method for Density and Relative Density (Specific Gravity) of Viscous Materials by Bingham Pycnometer, **05.01**
D 1481–81 Test Method for Density and Relative Density (Specific Gravity) of Viscous Materials by Lipkin Bicapillary Pycnometer, **05.01, 10.03**
D 1482 Discontinued—Combined with D 2244
D 1483–84 Test Method for Oil Absorption of Pigments by Gardner-Coleman Method, **06.02**
D 1484 Discontinued—Replaced by D 2240
D 1485–73(1978) Method for Rubber from Natural and Synthetic Sources—Sampling and Sample Preparation, **09.01**
D 1486 Discontinued
D 1487 Discontinued—Replaced by D 1905
D 1488–60(1981) Test Method for Amylaceous Matter in Adhesives, **15.06**
D 1489–69(1981) Test Method for Nonvolatile Content of Aqueous Adhesives, **15.06**
D 1490–82 Test Method for Nonvolatile Content of Urea-Formaldehyde Resin Solutions, **15.06**
D 1491–78 Test Method for Bromine Index of Aromatic Hydrocarbons by Potentiometric Titration, (Intent to Withdraw) **06.03**
D 1492–78(1984) Test Method for Bromine Index of Aromatic Hydrocarbons by Coulometric Titration, **06.03**
D 1493–84 Test Method for Solidification Point of Industrial Organic Chemicals, **06.03**
D 1494–60(1980) Test Method for Diffuse Light Transmission Factor of Reinforced Plastics Panels, **08.01, 08.04**
D 1495 Discontinued—Combined with D 2244
D 1496 Discontinued—Replaced by D 3370
D 1497 Discontinued—Combined with D 1068
D 1498–76(1981) Practice for Oxidation-Reduction Potential of Water, **11.01**
D 1499–84 Recommended Practice for Operating Light- and Water-Exposure Apparatus (Carbon-Arc Type) for Exposure of Plastics, **08.01**
D 1500–82 Test Method for ASTM Color of Petroleum Products (ASTM Color Scale), **05.01, 10.03**
D 1501 Discontinued
D 1502 Discontinued
D 1503–73(1978) Specification for Cellulose Acetate Butyrate (CAB) Plastic Pipe, Schedule 40, **08.04**
D 1504–70(1977) Recommended Practice for Determining Orientation Release Stress of Plastic Sheeting, **08.01**
D 1505–68(1979) Test Method for Density of Plastics by the Density-Gradient Technique, **08.01**
D 1506–85 Test Method for Carbon Black—Ash Content, **09.01**
D 1507 Discontinued
D 1508–84 Test Method for Carbon Black, Pelleted—Fines Content, **09.01**
D 1509–84 Test Method for Carbon Black—Heating Loss, **09.01**
D 1510–84 Test Method for Carbon Black—Iodine Adsorption Number, **09.01**
D 1511–83 Test Method for Carbon Black—Pellet Size Distribution, **09.01**
D 1512–84 Test Method for Carbon Black—pH Value, **09.01**
D 1513–80 Test Method for Carbon Black, Pelleted—Pour Density, **09.01**
D 1514–85 Test Method for Carbon Black—Sieve Residue, **09.01**
D 1515 Discontinued
D 1516–84 Test Method for Width of Leather, **15.04**
D 1517–80 Definitions of Terms Relating to Leather, **15.04**
D 1518–85 Test Method for Thermal Transmittance of Textile Material, **07.01**
D 1519–82 Test Method for Rubber Chemicals—Melting Range, **09.01**
D 1520 Discontinued—Replaced by D 1679
D 1521 Discontinued
D 1522 Discontinued—Combined with D 15
D 1523–83 Method for Synthetic Rubber Insulation for Wire and Cable, 90°C Operation, **10.02**
D 1524–84 Method for Visual Examination of Used Electrical Insulating Oils of Petroleum Origin in the Field, **10.03**
D 1525–82 Test Method for Vicat Softening Temperature of Plastics, **08.01**
D 1526 Discontinued
D 1527–77(1982) Specification for Acrylonitrile-Butadiene-Styrene(ABS) Plastic Pipe, Schedules 40 and 80, **08.04**
D 1528 Discontinued
D 1529 Discontinued
D 1530 Discontinued—Combined with D 882
D 1531–81 Test Method for Relative Permittivity (Dielectric Constant) and Dissipation Factor of Polyethylene by Liquid Displacement Procedure, **10.02, 10.03**
D 1532–77(1982) Specification for Polyester Glass-Mat Sheet Laminate, **10.01**
D 1533–83 Test Method for Water in Insulating Liquids (Karl Fischer Method), **10.03**
D 1534–84 Test Method for Approximate Acidity of Used Electrical Insulating Liquids by Color-Indicator Titration, **10.03**
D 1535–80 Method for Specifying Color by the Munsell System, **06.01, 15.09**
D 1536 Discontinued—Combined with D 2244
D 1537–60(1984) Specification for Distilled Soybean Fatty Acids, **06.03**
D 1538–60(1984) Specification for Distilled Linseed Fatty Acids, **06.03**
D 1539–60(1984) Specification for Dehydrated Castor Acids, **06.03**
D 1540–82 Test Method for Effect of Staining Agents on Organic Finishes Used in the Transportation Industry, **06.01**
D 1541–60(1984) Test Method for Total Iodine Value of Drying Oils and Their Derivatives, **06.03**
D 1542–60(1981) Methods for Qualitative Tests for Rosin in Varnishes, **06.01, 06.02**
D 1543–63(1981) Test Method for Color Permanence of White Architectural Enamels, **06.01**
D 1544–80 Test Method for Color of Transparent Liquids (Gardner Color Scale), **06.01, 06.02, 06.03**
D 1545–76(1981) Test Method for Viscosity of Transparent Liquids by Bubble Time Method, **06.01, 06.02, 06.03**
D 1546–62(1981) Methods for Performance Tests of Clear Floor Sealers, **06.01**
D 1547–81 Specification for Extruded Acrylic Plastic Sheet, **08.01**
D 1548–83 Test Method for Vanadium in Navy Special Fuel Oil, **05.01**
D 1549–64(1978) Test Method for Zinc in Lubricating Oils and Additives (Polarographic Method), (Intent to Withdraw) **05.01**
D 1550–64(1983) ASTM Butadiene Measurement Tables, **05.01**
D 1551 Discontinued
D 1552–83 Test Method for Sulfur in Petroleum Products (High-Temperature Method), **05.01**
D 1553–83 Method for Analysis of Graphites Used as Lubricants, **05.01**
D 1554–78 Definitions of Terms Relating to Wood-Base Fiber and Particle Panel Materials, **04.09**
D 1555–83 Method for Calculation of Volume and Weight of Industrial Aromatic Hydrocarbons, **05.01, 06.03**
D 1556–82 Test Method for Density of Soil in Place by the Sand-Cone Method, **04.08**
D 1557–78 Test Methods for Moisture-Density Relations of Soils and Soil-Aggregate Mixtures Using 10-lb (4.54-kg) Rammer and 18-in. (457-mm) Drop, **04.08**
D 1558–84 Test Method for Moisture Content Penetration Resistance Relationships of Fine Grained Soils, **04.08**
D 1559–82 Test Method for Resistance to Plastic Flow of Bituminous Mixtures Using Marshall Apparatus, **04.03**
D 1560–81a Test Methods for Resistance to Deformation and Cohesion of Bituminous Mixtures by Means of Hveem Apparatus, **04.03**
D 1561–81a Method for Preparation of Bituminous Mixture Test Specimens by Means of California Kneading Compactor, **04.03, 04.08**

D 1562–82 Specification for Cellulose Propionate Molding and Extrusion Compounds, **08.01**
D 1563–84 Test Method for Peroxide Number of Mineral Insulating Oils, **10.03**
D 1564 Discontinued—Replaced by D 3574
D 1565–81 Specification for Flexible Cellular Materials—Vinyl Chloride Polymers and Copolymers (Open-Cell Foam), **09.02**
D 1566–85b Definitions of Terms Relating to Rubber, **09.01, 09.02**
D 1567–85 Methods of Testing Detergent Cleaners for Evaluation of Corrosive Effects on Certain Porcelain Enamels, **15.04**
D 1568–63(1984) Methods for Sampling and Chemical Analysis of Alkylbenzene Sulfonates, **15.04**
D 1569–62(1979) Methods of Testing Detergent Alkylate, **15.04**
D 1570–81 Methods for Sampling and Chemical Analysis of Fatty Alkyl Sulfates, **15.04**
D 1571–77(1984) Specification for Woven Asbestos Cloth, **07.02**
D 1572 Discontinued—Combined with D 315
D 1573 Discontinued
D 1574–81 Test Method for Extractable Matter in Wool, **07.02**
D 1575–83 Test Method for Fiber Length of Wool in Scoured Wool and Card Sliver, **07.02**
D 1576–84 Test Method for Moisture in Wool by Oven Drying, **07.02**
D 1577–79 Test Method for Linear Density of Textile Fibers, **07.02**
D 1578–83 Test Method for Breaking Load (Strength) of Yarn by the Skein Method, **07.01**
D 1579–60(1981) Test Method for Filler Content of Phenol, Resorcinol, and Melamine Adhesives, **15.06**
D 1580–60(1984) Specification for Liquid Adhesives for Automatic Machine Labeling of Glass Bottles, **15.06**
D 1581–60(1984) Test Method for Bonding Permanency of Water- or Solvent-Soluble Liquid Adhesives for Labeling Glass Bottles, **15.06**
D 1582–60(1981) Test Method for Nonvolatile Content of Phenol, Resorcinol, and Melamine Adhesives, **15.06**
D 1583–61(1981) Test Method for Hydrogen Ion Concentration of Dry Adhesive Films, **15.06**
D 1584–60(1984) Test Method for Water Absorptiveness of Paper Labels, **15.06**
D 1585–82 Test Method for Fatty Acids Content of Tall Oil Rosin, **06.03**
D 1586–84 Method for Penetration Test and Split-Barrel Sampling of Soils, **04.08**
D 1587–83 Method for Thin-Walled Tube Sampling of Soils, **04.08**
D 1588 Discontinued
D 1589 Discontinued
D 1590–60(1977) Test Methods for Surface Tension of Water and Waste Water, **11.01**
D 1591 Discontinued
D 1592 Discontinued—Combined with D 709
D 1593–81 Specification for Nonrigid Vinyl Chloride Plastic Sheeting, **08.01**
D 1594 Discontinued
D 1595 Discontinued
D 1596–78a(1983) Test Method for Shock Absorbing Characteristics of Package Cushioning Materials, **15.09**
D 1597 Discontinued
D 1598–81 Test Method for Time-to-Failure of Plastic Pipe Under Constant Internal Pressure, **08.04**
D 1599–82 Test Method for Short-Time Hydraulic Failure Pressure of Plastic Pipe, Tubing, and Fittings, **08.04**
D 1600–83 Abbreviations of Terms Relating to Plastics, **08.01, 08.04**
D 1601–78 Test Method for Dilute Solution Viscosity of Ethylene Polymers, **08.02**
D 1602–60(1980) Test Method for Bearing Load of Corrugated Reinforced Plastics Panels, **08.02, 08.04**
D 1603–76(1983) Test Method for Carbon Black in Olefin Plastics, **08.02**
D 1604 Discontinued
D 1605–60(1979) Recommended Practices for Sampling Atmospheres for Analysis of Gases and Vapors, **11.03**
D 1606 Discontinued—Replaced by D 3266, D 3267, D 3268, D 3269, D 3270
D 1607–76 Test Method for Nitrogen Dioxide Content of the Atmosphere (Griess-Saltzman Reaction), **11.03**
D 1608–77(1985) Test Method for Oxides of Nitrogen in Gaseous Combustion Products (Phenol-Disulfonic Acid Procedure), **11.03**
D 1609 Discontinued
D 1610–84 Practice for Conditioning Leather and Leather Products for Testing, **15.04**
D 1611–81 Test Method for Corrosion Produced by Leather in Contact with Metal, **15.04**
D 1612–82 Test Method for Acetone in Methyl Alcohol (Methanol), **06.03**
D 1613–81 Test Method for Acidity in Volatile Solvents and Chemical Intermediates Used in Paint, Varnish, Lacquer, and Related Products, **06.03**
D 1614–84 Test Method for Alkalinity in Acetone, **06.03**
D 1615–60(1981) Test Method for Glycerol, Ethylene Glycol, and Pentaerythritol in Alkyd Resins, **06.02**
D 1616 Discontinued—Replaced by D 130
D 1617–81 Test Method for Ester Value of Lacquer Solvents and Thinners, **06.03**
D 1618–83 Test Method for Carbon Black Extractables—Toluene Discoloration, **09.01**
D 1619–83 Test Method for Carbon Black—Sulfur Content, **09.01**
D 1620 Discontinued
D 1621–73(1979) Test Method for Compressive Properties of Rigid Cellular Plastics, **08.02**
D 1622–83 Test Method for Apparent Density of Rigid Cellular Plastics, **08.02**
D 1623–78 Test Method for Tensile and Tensile Adhesion Properties of Rigid Cellular Plastics, **08.02**
D 1624–71(1981) Specification for Acid Copper Chromate, **04.09**
D 1625–71(1981) Specification for Chromated Copper Arsenate, **04.09**
D 1626 Discontinued
D 1627–71(1981) Method for Chemical Analysis of Acid Copper Chromate, **04.09**
D 1628–83 Method for Chemical Analysis of Chromated Copper Arsenate, **04.09**
D 1629 Discontinued
D 1630–83 Test Method for Rubber Property—Abrasion Resistance (NBS Abrader), **09.01**
D 1631–80 Test Method for Water in Phenol and Related Materials by the Iodine Reagent Method, **06.03**
D 1632–63(1979) Methods of Making and Curing Soil-Cement Compression and Flexure Test Specimens in the Laboratory, **04.08**
D 1633–84 Test Method for Compressive Strength of Molded Soil-Cement Cylinders, **04.08**
D 1634–63(1979) Test Method for Compressive Strength of Soil-Cement Using Portions of Beams Broken in Flexure (Modified Cube Method), **04.08**
D 1635–63(1979) Test Method for Flexural Strength of Soil-Cement Using Simple Beam with Third-Point Loading, **04.08**
D 1636–81 Specification for Allyl Molding Compounds, **08.02**
D 1637–83 Test Method for Tensile Heat Distortion Temperature of Plastic Sheeting, **08.02**
D 1638–74 Methods of Testing Urethane Foam Isocyanate Raw Materials, **06.03, 08.02, 09.02**
D 1639–83 Test Method for Acid Value of Organic Coating Materials, **06.01**
D 1640–83 Test Methods for Drying, Curing, or Film Formation of Organic Coatings at Room Temperature, **06.01**
D 1641–59(1981) Test Method for Exterior Durability of Varnishes, **06.01**
D 1642–70(1981) Test Methods for Elasticity or Toughness of Varnishes, **06.01**
D 1643–60(1976) Test Method for Gas Checking and Draft Test of Varnish Films, **06.01**
D 1644–75(1981) Test Methods for Nonvolatile Content of Varnishes, **06.01**
D 1645 Discontinued—Replaced by D 1640
D 1646–81 Test Method for Rubber from Natural or Synthetic Sources—Viscosity and Vulcanization Characteristics (Mooney Viscometer), **09.01**
D 1647–83 Test Method for Resistance of Dried Films of Varnishes to Water and Alkali, **06.01**
D 1648–81 Specification for Basic Lead Silicochromate Pigment, **06.02**
D 1649–82 Specification for Strontium Chromate Pigment, **06.02**
D 1650–76(1981) Methods of Sampling and Testing Shellac Varnish, **06.02**
D 1651 Discontinued
D 1652–73(1980) Test Method for Epoxy Content of Epoxy Resins, **06.02, 08.02**
D 1653–72(1979) Test Method for Moisture Vapor Permeability of Organic Coating Films, **06.01**
D 1654–79a(1984) Method for Evaluation of Painted or Coated Specimens Subjected to Corrosive Environments, **06.01**
D 1655–84 Specification for Aviation Turbine Fuels, **05.01**
D 1656 Discontinued—Replaced by D 2699
D 1657–83 Test Method for Density or Relative Density of Light Hydrocarbons by Pressure Hydrometer, **05.01**

EXHIBIT 14

1986 Annual Book of ASTM Standards

Index

Materials, **03.04**

B 694–86 Specification for Copper, Copper Alloy, and Copper-Clad Stainless Steel Sheet and Strip for Electrical Cable Shielding, **02.01**

B 695–85 Specification for Coatings of Zinc Mechanically Deposited on Iron and Steel, **02.05,15.08**

B 696–81 Specification for Coatings of Cadmium Mechanically Deposited on Iron and Steel, **02.05**

B 697–81 Guidelines for Selection of Sampling Plans for Inspection of Electrodeposited Metallic Coatings and Related Finishes on Products, **02.05**

B 698–81 Classification for Seamless and Welded Copper and Copper Alloy Plumbing Pipe and Tube, **02.01**

B 699–81 Specification for Coatings of Cadmium Vacuum—Deposited on Iron and Steel, **02.05**

B 700–81 Specification for Electrodeposited Coatings of Silver for Engineering Use, **02.05**

B 701–81 Specification for Concentric-Lay-Stranded Self-Damping Aluminum Conductors, **02.03**

B 702–82 Specification for Copper-Tungsten Electrical Contact Material, **03.04**

B 703–83 Test Method for Apparent Density of Metal Powders Using the Arnold Meter, **02.05**

B 704–82 Specification for Nickel-Alloy (UNS N06625 and N08825) Welded Tube, **02.04**

B 705–82 Specification for Nickel-Alloy (UNS N06625 and N08825) Welded Pipe, **02.04**

B 706–83 Specification for Seamless Copper Alloy (UNS No. C69100) Pipe and Tube, **02.01**

B 707–82 Specification for Seamless Copper Water Tube (Metric) (Special Use), **02.01**

B 708–82 Specification for Tantalum and Tantalum Alloy Plate, Sheet, and Strip, **02.04**

B 709–84 Specification for Iron-Nickel-Chromium-Molybdenum Alloy UNS N08028 Plate, Sheet, and Strip, **02.04**

B 710–82 Specification for Nickel-Iron-Chromium Silicon-Alloy Welded Pipe, **02.04**

B 711–82 Specification for Concentric-Lay-Stranded Aluminum-Alloy Conductors, Steel Reinforced (AACSR), **02.03**

B 712–82 Guide for Determination of Sodium and Potassium Content for Silver-Cadmium Oxide Contact Materials, **03.04**

B 713–82 Definitions of Terms Relating to Superconductors, **02.03**

B 714–82 Test Method for D-C Critical Current of Composite Superconductors, **02.03**

B 715–83 Specification for Sintered Copper Structural Parts for Electrical Conductivity Applications, **02.05**

B 716–83 Specification for Welded Copper Water Tube, **02.01**

B 716M–83 Specification for Welded Copper Water Tube [Metric], **02.01**

B 717–84 Specification for Refined Ruthenium, **02.04**

B 718–83 Specification for Nickel-Chromium-Molybdenum-Cobalt-Tungsten-Iron-Silicon Alloy (UNS N06333) Plate, Sheet, and Strip, **02.04**

B 719–83 Specification for Nickel-Chromium-Molybdenum-Cobalt-Tungsten-Iron-Silicon Alloy (UNS N06333) Bar, **02.04**

B 720–83 Specification for Seamless UNS NO 8310 Tube, **02.04**

B 721 Not yet assigned

B 722–83a Specification for Ni-Cr-Mo-Co-W-Fe-Si Alloy (UNS NO 6333) Seamless Pipe and Tube, **02.04**

B 723–83a Specification for Ni-Cr-Mo-Co-W-Fe-Si Alloy (UNS NO 6333) Pipe Welded, **02.04**

B 724–83 Test Method for Indentation Hardness of Aluminum Alloys by Means of a Newage Portable Non-Caliper-Type Instrument, **02.02**

B 725–84 Specification for Welded Nickel Pipe, **02.04**

B 726–83 Specification for Ni-Cr-Mo-Co-W-Fe-Si Alloy (UNS NO 6333 Welded Tube, **02.04**

B 727–83 Practice for Preparation of Plastics Materials for Electroplating, **02.05**

B 728–84 Specification for Concentric-Lay-Stranded Aluminum-Alloy Conductors, Steel Reinforced (AACSR), **02.03**

B 729–84 Specification for Seamless Chromium-Nickel-Iron-Molybdenum-Copper-Columbium-Stabilized Alloy (UNS N08020) Pipe and Tube, **02.04**

B 730–84 Specification for Welded Nickel Tube, **02.04**

B 731–84 Specification for 60% Palladium – 40% Silver Electrical Contact Material, **03.04**

B 732–84 Test Method for Evaluating the Corrosivity of Solder Fluxes for Copper Tubing Systems, **02.01**

B 733–84 Specification for Autocatalytic Nickel-Phosphorus Coatings on Metals, **02.05**

B 734–84 Specification for Electrodeposited Copper for Engineering Uses, **02.05**

B 735–84 Test Method for Porosity in Gold Coatings on Metal Substrates by Gas Exposures, **03.04**

B 736–84 Specification for Aluminum, Aluminum Alloy, and Aluminum-Clad Steel Cable Shielding Stock, **02.02**

B 737–84 Specification for Hot-Rolled and/or Cold Finished Hafnium Rod and Wire, **02.04**

B 738–84 Specification for Fine-Wire Bunch-Stranded and Rope-Lay Bunch-Stranded Copper Conductors for Use as Electrical Conductors, **02.03**

B 739–85 Specification for Nickel-Iron-Chromium-Silicon Alloy Welded Tube, **02.04**

B 740–84 Specification for Copper-Nickel-Tin Spinodal Alloy Strip, **02.01**

B 741–85 Test Methods for Porosity in Gold Coatings on Metal Substrates by Paper Electrography, **03.04**

B 742–85 Specification for Fine Silver Electrical Contact Fabricated Material, **03.04**

B 743–85 Specification for Seamless Copper Tube in Coils, **02.01**

B 744/B744M–85 Specification for Aluminum Alloy Sheet for Corrugated Pipe, **02.02**

B 745/B745M–85 Specification for Corrugated Aluminum Pipe for Sewers and Drains, **02.02**

B 746/B746M–85 Specification for Corrugated Aluminum Alloy Structural Plate for Field-Bolted Pipe, Pipe Arches and Arches, **02.02**

B 747–85 Specification for Copper-Zirconium Alloy Sheet and Strip, **02.01**

B 748–85 Method for Measurement of Thickness of Metallic Coatings by Measurement of Cross Section With a Scanning Electron Microscope, **02.05**

B 749–85 Specification for Lead and Lead Alloy Strip, Sheet, and Plate Products, **02.04**

B 750–85 Specification for Zinc-5% Aluminum-Mischmetal Alloy (UNS Z38510) in Ingot Form for Hot-Dip Coatings, **02.04**

B 751–85 Specification for General Requirements for Nickel and Nickel Alloy Welded Tube, **02.04**

B 752–85 Specification for Castings, Zirconium-Base, Corrosion Resistant, for General Applications, **02.04**

B 754–86 Test Method for Measuring and Recording the Deviations from Flatness in Copper and Copper Alloy Strip, **02.01**

B 755–86 Specification for Nickel-Chromium-Molybdenum-Tungsten Alloys (UNS N06110) Plate, Sheet, and Strip, **02.04**

B 756–86 Specification for Nickel-Chromium-Molybdenum-Tungsten Alloys (UNS N06110) Rod and Bar, **02.04**

B 757–86 Specification for Nickel-Chromium-Molybdenum-Tungsten Alloys (UNS N06110) Welded Pipe, **02.04**

B 758–86 Specification for Nickel-Chromium-Molybdenum-Tungsten Alloys (UNS N06110) Welded Tube, **02.04**

B 759–86 Specification for Nickel-Chromium-Molybdenum-Tungsten Alloys (UNS N06110) Pipe and Tube, **02.04**

B 760–86 Specification for Tungsten Plate, Sheet, and Foil, **02.04**

C. CEMENTITIOUS, CERAMIC, CONCRETE, AND MASONRY MATERIALS

C 2 Discontinued—Replaced by E 119

C 3 Discontinued—Replaced by E 119

C 4–62(1981) Specification for Clay Drain Tile, **04.05**

C 5–79(1984) Specification for Quicklime for Structural Purposes, **04.01**

C 6 Discontinued—Replaced by C 206

C 7 Discontinued

C 8 Discontinued

C 9 Discontinued—Replaced by C 150

C 10 Discontinued

C 11–86a Definitions of Terms Relating to Gypsum and Related Building Materials and Systems, **04.01**

C 12–82 Recommended Practice for Installing Vitrified Clay Pipe Lines, **04.05**

C 13 Discontinued—Replaced by C 700

C 14–82 Specification for Concrete Sewer, Storm Drain, and Culvert Pipe, **04.05**

C 14M–82 Specification for Concrete Sewer, Storm Drain, and Culvert Pipe [Metric], **04.05**

C 15 Discontinued

C 16–81(1985) Method of Load Testing Refractory Brick at High Temperatures, **15.01**

C 17 Discontinued

C 18 Discontinued—Replaced by C 571 to C 575

C 19 Redesignated E 119

C 20–83 Test Methods for Apparent Porosity, Water Absorption, Apparent Specific Gravity, and Bulk Density of Burned Refractory Brick and Shapes by Boiling Water, **15.01**

C 21 Discontinued—Replaced by C 62, C 67, C 73

C 22–83 Specification for Gypsum, **04.01**

C 23 Discontinued

C 24–84 Test Method for Pyrometric Cone Equivalent (PCE) of Refractory Materials, **15.01**

C 25–83 Method for Chemical Analysis of Limestone, Quicklime, and Hydrated Lime, **04.01**

C 26 Discontinued—Replaced by C 471, C 472, C 473

C 27–84 Classification of Fireclay and High-Alumina Refractory Brick, **15.01**

C 28–80 Specification for Gypsum Plasters, **04.01**

C 29–78 Test Method for Unit Weight and Voids in Aggregate, **04.02,04.03**

C 30 Discontinued—Replaced by C 29

C 31–85 Methods of Making and Curing Concrete Test Specimens in the Field, **04.02**

C 32–73(1984) Specification for Sewer and Manhole Brick (Made from Clay or Shale), **04.05**

C 33–86 Specification for Concrete Aggregates, **04.02**

C 34–84 Specification for Structural Clay Load-Bearing Wall Tile, **04.05**

C 35–76(1981) Specification for Inorganic Aggregates for Use in Gypsum Plaster, **04.01,04.02**

C 36–85 Specification for Gypsum Wallboard, **04.01**

C 37–84a Specification for Gypsum Lath, **04.01**

C 38–79(1984) Method of Panel Spalling Testing Refractory Brick, **15.01**

C 39–86 Test Method for Compressive Strength of Cylindrical Concrete Specimens, **04.02**

C 40–84 Test Method for Organic Impurities in Fine Aggregates for Concrete, **04.02**

C 41 Discontinued—Replaced by C 136

C 42–84a Methods of Obtaining and Testing Drilled Cores and Sawed Beams of Concrete, **04.02**

C 43–85a Definitions of Terms Relating to Structural Clay Products, **04.05**

C 44 Discontinued

C 45 Discontinued—Replaced by C 911

C 46 Discontinued—Replaced by C 911

C 47 Discontinued

C 48 Discontinued

C 49 Discontinued—Replaced by C 911

C 50–78(1983) Methods for Sampling, Inspection, Packing, and Marking of Lime and Limestone Products, **04.01,04.03**

C 51–71(1981) Definitions of Terms Relating to Lime and Limestone (As Used by the Industry), **04.01**

C 52 Discontinued

C 53 Discontinued—Replaced by C 911

C 54 Discontinued—Combined with C 53

C 55–85 Specification for Concrete Building Brick, **04.05**

C 56–71(1981) Specification for Structural Clay Non-Load-Bearing Tile, **04.05**

C 57–57(1983) Specification for Structural Clay Floor Tile, **04.05**

C 58 Discontinued

C 59–83 Specification for Gypsum Casting and Molding Plaster, **04.01**

C 60 Discontinued

C 61–76(1981) Specification for Gypsum Keene's Cement, **04.01**

C 62–85a Specification for Building Brick (Solid Masonry Units Made from Clay or Shale), **04.05**

C 63 Discontinued

C 64 Discontinued

C 65 Discontinued

C 66 Discontinued—Replaced by C 35

C 67–85 Method of Sampling and Testing Brick and Structural Clay Tile **04.05**

C 68 Discontinued—Replaced by C 128

C 69 Discontinued

C 70–79(1985) Test Method for Surface Moisture in Fine Aggregate, **04.02**

C 71–85 Definitions of Terms Relating to Refractories, **15.01**

C 72 Discontinued

C 73–85 Specification for Calcium Silicate Face Brick (Sand-Lime Brick), **04.05**

C 74 Discontinued—Replaced by C 150

C 75 Discontinued—Combined with C 76

C 76–85a Specification for Reinforced Concrete Culvert, Storm Drain, and Sewer Pipe, **04.05**

C 76M–85a Specification for Reinforced Concrete Culvert, Storm Drain, and Sewer Pipe [Metric], **04.05**

C 77 Discontinued—Replaced by C 183, C 184, C 187, C 188, C 190, C 191

C 78–84 Test Method for Flexural Strength of Concrete (Using Simple Beam with Third-Point Loading), **04.02**

C 79–84a Test Method for Gypsum Sheathing Board, **04.01**

C 80 Discontinued

C 81 Discontinued

C 82 Discontinued

C 83 Discontinued

C 84 Discontinued

C 85–66(1973) Test Method for Cement Content of Hardened Portland Cement Concrete, **04.02**

C 86 Discontinued—Replaced by C 127

C 87–83 Test Method for Effect of Organic Impurities in Fine Aggregate on Strength of Mortar, **04.02**

C 88–83 Test Method for Soundness of Aggregates by Use of Sodium Sulfate or Magnesium Sulfate, **04.02,04.03**

C 89 Discontinued—Replaced by C 88

C 90–85 Specification for Hollow Load-Bearing Concrete Masonry Units, **04.05**

C 91–83a Specification for Masonry Cement, **04.01**

C 92–76(1984) Test Methods for Sieve Analysis and Water Content of Refractory Materials, **15.01**

C 93–84 Test Methods for Cold Crushing Strength and Modulus of Rupture of Insulating Firebrick, **15.01**

C 94–86 Specification for Ready-Mixed Concrete, **04.02**

C 95 Discontinued—Replaced by C 127, C 128

C 96 Discontinued—Replaced by C 127, C 128

C 97–83 Test Methods for Absorption and Bulk Specific Gravity of Natural Building Stone, **04.08**

C 98 Discontinued—Replaced by C 170

C 99–85 Test Method for Modulus of Rupture of Natural Building Stone, **04.08**

C 100 Discontinued

C 101 Discontinued

C 102 Discontinued

C 103 Discontinued

C 104 Discontinued

C 105 Discontinued

C 106 Discontinued—Combined with C 64

C 107–76(1984) Method of Panel Spalling Testing High-Duty Fireclay Brick, **15.01**

C 108–46(1977) Symbols for Heat Transmission, **15.01**

C 109–86 Test Method for Compressive Strength of Hydraulic Cement Mortars (Using 2-in. or 50-mm Cube Specimens), **04.01**

C 110–85 Methods for Physical Testing of Quicklime, Hydrated Lime, and Limestone, **04.01**

C 111 Discontinued

C 112 Discontinued—Combined with C 67

E 620–85 Recommended Practice for Reporting Opinions of Technical Experts, **14.02**
E 621–84 Practice for Use of Metric (SI) Units in Building Design and Construction, **04.07,08.04**
E 622–84 Generic Guide for Computerized Systems, **14.01**
E 623–83 Guidelines for Developing Functional Requirements for Computerized Laboratory Systems, **14.01**
E 624–83 Guide for Developing Implemention Designs for Computerized Systems, **14.01**
E 625–83 Guidelines for Training Users of Computerized Systems, **14.01**
E 626–83 Guidelines for Evaluating Computerized Systems, **14.01**
E 627–82 Guidelines for Documenting Computerized Laboratory Systems, **14.01**
E 628–77(1982) Guidelines for Field Evaluation of Nematode Control Agents—Test Materials and Environmental Conditions, **11.04**
E 629–77(1982) Guidelines for Field Evaluation of Nematode Control Agents—Determination of Nematode Population Responses to Control Agents, **11.04**
E 630–77(1982) Guidelines for Evaluation of Nematode Control Agents—Plant Responses, **11.04**
E 631–85c Terminology of Building Constructions, **04.07**
E 632–82 Practice for Developing Accelerated Tests to Aid Prediction of the Service Life of Building Components and Materials, **04.07**
E 633 Not yet assigned
E 634–78(1982) Practice for Sampling of Zinc and Zinc Alloys for Optical Emission Spectrochemical Analysis, **03.06**
E 635 Not yet assigned
E 636–83 Practice for Conducting Supplemental Surveillance Tests for Nuclear Power Reactor Vessels, **12.02**
E 637–78(1985) Method for Calculation of Stagnation Enthalpy from Heat Transfer Theory and Experimental Measurements of Stagnation-Point Heat Transfer and Pressure, **15.03**
E 638–78 Method for Calibration of Heat Transfer Rate Calorimeters Using a Narrow-Angle Blackbody Radiation Facility, **15.03**
E 639–78(1985) Method for Measuring Total-Radiance Temperature of Heated Surfaces Using a Radiation Pyrometer, **15.03**
E 640–78(1984) Test Method for Preservatives in Water-Containing Cosmetics, **11.04**
E 641–85 Method of Testing Agricultural Hydraulic Spray Nozzles, **11.04**
E 642–85 Practice for Determining Application Rates and Distribution Patterns from Agricultural Aircraft, **11.04**
E 643–84 Test Method for Ball Punch Deformation of Metallic Sheet Material, **03.01**
E 644–78 Method of Testing Industrial Resistance Thermometers, **14.01**
E 645–85 Test Method for Efficacy of Microbicides Used in Cooling Systems, **11.04**
E 646–78(1984) Test Method for Tensile Strain-Hardening Exponents (n-Values) of Metallic Sheet Materials, **03.01**
E 647–86 Test Method for Constant-Load-Amplitude Fatigue Crack Growth Rates Above 10^{-8} m/Cycle, **03.01**
E 648–86 Test Method for Critical Radiant Flux of Floor Covering Systems Using a Radiant Heat Energy Source, **04.07**
E 649–84 Test Method for Bromine in Chlorine, **15.05**
E 650–85 Recommended Practice for Mounting Piezoelectric Acoustic Emission Contact Sensors, **03.03**
E 651–78(1984) Guidelines for Evaluating Capabilities of Agencies Involved in System Analysis and Compliance Assurance for Manufactured Building, **04.07**
E 652–84 Method for Testing Nonresidual Liquid Household Insecticides Against Flying Insects, **11.04**
E 653–84 Method of Testing Effectiveness of Aerosol and Pressurized Space Spray Insecticides Against Flying Insects, **11.04**
E 654–84 Method of Testing Effectiveness of Aerosol and Pressurized Spray Insecticides Against Cockroaches, **11.04**
E 655–78(1982) Guidelines for Evaluation of Nematicides Against Root-Knot Nematode—Population Eradication Test, **11.04**
E 656–78(1982) Guidelines for Evaluation of Hatching Heterodera Schachtii Larvae, **11.04**
E 657–78(1984) Test Method for Comparative Acute and Long-Term Oral or Gustatory Avian Repellency, **11.04**
E 658–78(1984) Test Method for Efficacy of Dog Repellents Designed to be Directly Applied to Garbage Bags, **11.04**
E 659–78(1984) Test Method for Autoignition Temperature of Liquid Chemicals, **05.03,14.02**
E 660–83 Practice for Accelerated Polishing of Aggregates or Pavement Surfaces Using a Small-Wheel, Circular Track, Polishing Machine, **04.03**
E 661–78 Test Method for Performance of Wood and Wood-Based Floor and Roof Sheathing Under Concentrated Static and Impact Loads, **04.07**
E 662–83 Test Method for Specific Optical Density of Smoke Generated by Solid Materials, **04.07**
E 663–78 Practice for Flame Atomic Absorption Analysis, **03.05,03.06**
E 664–78(1983) Practice for Measurement of the Apparent Attenuation of Longitudinal Ultrasonic Waves by Immersion Method, **03.03**
E 665–78(1984) Practice for Determining Absorbed Dose Versus Depth in Materials Exposed to the X-Ray Output of Flash X-Ray Machines, **12.02**
E 666–78(1984) Practice for Calculating Absorbed Dose from Gamma or X Radiation, **12.02**
E 667–81 Specification for Clinical Thermometers (Maximum Self-Registering, Mercury-in-Glass), **14.01**
E 668–78(1984) Practice for Application of Thermoluminescence-Dosimetry(TLD) Systems for Determining Absorbed Dose in Radiation-Hardness Testing of Electronic Devices, **10.04,12.02**
E 669–84 Master Matrix for Nuclear Fuel Cycle Standards, **12.02**
E 670–85 Test Method for Side Force Friction on Paved Surfaces Using the Mu-Meter, **04.03**
E 671–79(1984) Specification for Maximum Permissible Thermal Residual Stress in Annealed Glass Laboratory Apparatus, **14.02**
E 672–85 Specification for Disposable Glass Micropipets, **14.02**
E 673–86 Definitions of Terms Relating to Surface Analysis, **03.06**
E 674–80(1985) Specification for Industrial Perforated Plate and Screens (Round Opening Series), **01.03,14.02**
E 675–84 Specification for Interchangeable Stopcocks and Stoppers, **14.02**
E 676–84 Specification for Interchangeable Taper-Ground Joints, **14.02**
E 677–80 Specification for Interchangeable Spherical Ground Joints, **14.02**
E 678–84 Practice for Evaluation of Technical Data, **14.02**
E 679–79 Practice for Determination of Odor and Taste Thresholds by a Forced Choice Ascending Concentration Series Method of Limits, **15.07**
E 680–79(1984) Test Method for Drop Weight Impact Sensitivity of Solid-Phase Hazardous Materials, **14.02**
E 681–85 Test Method for Limits of Flammability of Chemicals, **14.02**
E 682–79 Practice for Liquid Chromatography Terms and Relationships, **14.01**
E 683–79(1984) Practice for Installation and Service of Solar Space Heating Systems for One- and Two-Family Dwellings, **12.02**
E 684–83 Practice for Approximate Determination of Current Density of Large-Diameter Ion Beams for Sputter Depth Profiling of Solid Surfaces, **03.06**
E 685–79 Practice for Testing Fixed-Wavelength Photometric Detectors Used in Liquid Chromatography, **14.01**
E 686–85 Method for Evaluation of Antimicrobial Agents in Aqueous Metal Working Fluids, **11.04**
E 687–79 Practice for Sensory Evaluation Procedure to Establish Guidelines for Open Dating Food and Beverage Products, **15.07**
E 688–79 Method of Testing Waste Glass as a Raw Material for Manufacture of Glass Containers, **11.04**
E 689–79(1984) Reference Radiographs for Ductile Iron Castings, **01.02,03.03**
E 690–85 Recommended Practice for In-Situ Electromagnetic (Eddy Current) Examination of Nonmagnetic Heat Exchanger Tubes, **03.03**
E 691–79 Practice for Conducting an Interlaboratory Test Program to Determine the Precision of Test Methods, **06.03,08.03,14.02**
E 692–79(1985) Test Method for Cesium-137 in Irradiated Nuclear Fuels by High-Resolution Gamma-Ray Spectral Analysis, **12.02**
E 693–79(1985) Practice for Characterizing Neutron Exposures in Ferritic Steels in Terms of Displacements Per Atom (DPA), **12.02**
E 694–83 Specification for Volumetric Ware, **14.02**
E 695–79(1985) Method for Measuring Relative Resistance of Wall, Floor, and Roof Constructions to Impact Loading, **04.07**
E 696–84 Specification for Tungsten Rhenium Alloy Thermocouple Wire, **14.01**
E 697–79 Practice for Use of Electron-Capture Detectors Used in Gas Chromatography, **14.01**
E 698–79(1984) Test Method for Arrhenius Kinetic Constants for Thermally Unstable Materials, **14.02**
E 699–79(1984) Practice for Criteria for Evaluation of Agencies Involved in Testing, Quality Assurance, and Evaluating

Building Components in Accordance with Test Methods Promulgated by ASTM Committee E-6, **04.07**
E 700–79(1984) Test Method for Water in Gases Using Karl Fischer Reagent, **15.05**
E 701–80 Method of Testing Municipal Ferrous Scrap, **11.04**
E 702–85 Specification for Municipal Ferrous Scrap, **11.04**
E 703–79(1985) Practice for Electromagnetic (Eddy Current) Sorting of Nonferrous Metals, **03.03**
E 704–84 Method for Measuring Reaction Rates by Radioactivation of Uranium-238, **12.02**
E 705–84 Method for Measuring Reaction Rates by Radioactivation of Neptunium-237, **12.02**
E 706–84 Master Matrix for Light-Water Reactor Pressure Vessel Surveillance Standards, **12.02**
E 707–79(1984) Test Method for Skid Resistance of Paved Surfaces Using the North Carolina State University Variable-Speed Friction Tester, **04.03**
E 708–79 Specification for Waste Glass as a Raw Material for the Manufacture of Glass Containers, **11.04**
E 709–80(1985) Practice for Magnetic Particle Examination, **03.03**
E 710–86 Method for Comparing EMF Stabilities of Base-Metal Thermoelements in Air Using Dual, Simultaneous, Thermal-EMF Indicators, **14.01**
E 711–81 Test Method for Gross Calorific Value of Refuse-Derived Fuel (RDF-3) by the Bomb Calorimeter, **11.04**
E 712–80 Practice for Laboratory Screening of Metallic Containment Materials for Use with Liquids in Solar Heating and Cooling Systems, **12.02**
E 713–80 Guide for the Selection of Scales for Metric Building Drawings, **04.07**
E 714–80 Specification for Disposable Glass Serological Pipets, **14.02**
E 715–80 Specification for Gravity-Convection and Forced-Circulation Water Baths, **14.02**
E 716–85 Practices for Sampling of Aluminum and Its Alloys for Spectrochemical Analysis, **03.06,10.02**
E 717–84 Guide for Preparation of the Accreditation Annex of Acoustical Test Standards, **04.06**
E 718–80(1985) Method for Spectrographic Analysis of Cartridge Brass, **03.06**
E 719–80 Test Method for Indentation of Building Materials Surfaces Under Concentrated Loads as a Measure of Serviceability, (Intent to Withdraw) **04.07**
E 720–85 Guide for Selection of a Set of Neutron-Activation Foils for Determining Neutron Spectra Used in Radiation-Hardness Testing of Electronics, **12.02**
E 721–85 Method for Determining Neutron Energy Spectra with Neutron-Activation Foils for Radiation Hardness Testing of Electronics, **12.02**
E 722–85 Practice for Characterizing Neutron Energy Fluence Spectra in Terms of an Equivalent Monoenergetic Neutron Fluence for Radiation-Hardness Testing of Electronics, **12.02**
E 723–85 Test Method for Efficacy of Antimicrobials as Preservatives for Aqueous-Based Products Used in the Paper Industry (Bacterial Spoilage), **11.04**
E 724–80 Practice for Conducting Static Basic Acute Toxicity Tests with Larvae of Four Species of Bivalve Molluscs, **11.04**
E 725–86 Test Method for Sampling Granular Carriers and Granular Pesticides, **11.04**
E 726–86 Test Method for Particle Size Distribution of Granular Carriers or Granular Pesticides, **11.04**
E 727–86 Test Methods for Determining Bulk Density of Granular Carriers and Granular Pesticides, **11.04**
E 728–86 Test Method for Resistance to Attrition of Granular Carriers and Granular Pesticides, **11.04**
E 729–80 Practice for Conducting Acute Toxicity Tests with Fishes, Macroinvertebrates, and Amphibians, **11.04**
E 730–85 Guide for Developing Functional Designs for Computerized Systems, **14.01**
E 731–85 Guide for Procurement of Commercially Available Computerized Systems, **14.01**
E 732–80 Specification for Disposable Pasteur-Type Pipet, **14.02**
E 733–80(1986) Specification for 44.7-μL Disposable Glass Micropipets, **14.02**
E 734–80 Specification for Disposable Glass Blood Sample Capillary Tube (Microhematocrit), **14.02**
E 735–80 Specification for Minimum Performance Standards for Hand-Held Pipettors with Pipet Tips, **14.02**
E 736–86 Test Method for Cohesion/Adhesion of Sprayed Fire-Resistive Materials Applied to Structural Members, **04.07**
E 737–84 Practice for Installation of Storm Windows, Replacement Windows, Multi-Glazing, Storm Doors, and Replacement Doors, **08.04**
E 738–80(1985) Test Method for Aluminum in Iron Ores by Complexometric Titration, **03.05**
E 739–80 Practice for Statistical Analysis of Linear or Linearized Stress-Life (S-N) and Strain-Life (ε-N) Fatigue Data, **03.01**
E 740–80(1986) Practice for Fracture Testing with Surface-Crack Tension Specimens, **03.01**
E 741–83 Method for Determining Air Leakage Rate by Tracer Dilution Test, **04.07**
E 742–81 Definitions of Terms Relating to Fluid Aqueous and Chemical Environmentally Affected Fatigue Testing, **03.01**
E 743–80(1985) Guide for Spectrochemical Laboratory Quality Assurance, **03.06**
E 744–85 Practice for Evaluating Solar Absorptive Materials for Thermal Applications, **12.02**
E 745–80 Practice for Simulated Service Testing for Corrosion of Metallic Containment Materials for Use with Heat Transfer Fluids in Solar Heating and Cooling Systems, **12.02**
E 746–83 Method for Determining Relative Image Quality Response of Industrial Radiographic Film, **03.03**
E 747–84a Method for Controlling Quality of Radiographic Testing Using Wire Penetrameters, **03.03**
E 748–85 Practices for Thermal Neutron Radiography of Materials, **03.03**
E 749–80(1985) Practice for Acoustic Emission Monitoring During Continuous Welding, **03.03**
E 750–80 Practice for Measuring Operating Characteristics of Acoustic Emission Instrumentation, **03.03**
E 751–80(1985) Practice for Acoustic Emission Monitoring During Resistance Spot Welding, **03.03**
E 752–81 Practice for Safety and Health Requirements Relating to Occupational Exposure to Carbon Disulfide, **11.03**
E 753–80(1985) Specification for Municipal Aluminum Scrap (MAS), **11.04**
E 754–80(1985) Test Method for Pullout Resistance of Tires and Anchors Embedded in Masonry Mortar Joints, **04.07**
E 755–80(1985) Method for Assay of Dicumyl Peroxide by Liquid Chromatography, **15.05**
E 756–83 Method for Measuring Vibration-Damping Properties of Materials, **04.06**
E 757–80 Test Method for Efficacy of Canine Reproduction Inhibitors, **11.04**
E 758–80(1985) Test Method for Mammalian Acute Percutaneous Toxicity, **11.04**
E 759–86 Test Method for Effect of Deflection of Sprayed Fire-Resistive Material Applied to Structural Members, **04.07**
E 760–86 Test Method for Effect of Impact on Bonding of Sprayed Fire-Resistive Material Applied to Structural Members, **04.07**
E 761–86 Test Method for Compressive Strength of Sprayed Fire-Resistive Material Applied to Structural Members, **04.07**
E 762 Not yet assigned
E 763–85 Method for Calculation of Absorbed Dose from Neutron Irradiation by Application of Threshold-Foil Measurement Data, **12.02**
E 764–80(1984) Practice for Identifying Test Methods for Breeder Reactor Core Materials, **12.02**
E 765–80 Practice for Evaluation of Cover Materials for Flat Plate Solar Collectors, **12.02**
E 766–86 Practice for Calibrating the Magnification of SEM Using NBS SRM-484, **03.03**
E 767–80(1985) Test Method for Shear Resistance of Steel Truss Plates, **04.07**
E 768–80(1985) Practice for Preparing and Evaluating Specimens for Automatic Inclusion Assessment of Steel, **03.03**
E 769–85 Test Methods for Odor of Methanol, Ethanol, n-Propanol, and Isopropanol, **15.07**
E 770–80(1985) Method for Classifying Pavement Surface Textures, **04.03**
E 771–81 Test Method for Spontaneous Heating Tendency of Materials, **14.02**
E 772–84 Definitions of Terms Relating to Solar Energy Conversion, **12.02**
E 773–83 Test Method for Seal Durability of Sealed Insulating Glass Units, **04.07**
E 774–84a Specification for Sealed Insulating Glass Units, **04.07**
E 775–81 Test Methods for Total Sulfur in the Analysis Sample of Refuse-Derived Fuel, **11.04**
E 776–81 Test Method for Forms of Chlorine in Refuse-Derived Fuel, **11.04**
E 777–81 Test Method for Carbon and Hydrogen in the Analysis Sample of Refuse-Derived Fuel, **14.02**
E 778–81 Test Method for Nitrogen in the Analysis Sample of Refuse-Derived Fuel, **11.04**
E 779–81 Method for Determining Air Leakage Rate by Fan Pressurization Test, **04.07**
E 780–81 Method for Measuring the Insulation Resistance of Sheathed Thermocouple Material at Room Temperature, **14.01**
E 781–86 Practice for Evaluating Absorptive Solar Receiver Materials When Exposed to Conditions Simulating

EXHIBIT 15

1987 ANNUAL BOOK OF ASTM STANDARDS

SECTION 00

Index

VOLUME 00.01

Subject Index; Alphanumeric List

Revision issued annually

TA401
.A653
v.00.01
1987

Editorial Staff

Managing Standards Editor:
Roberta A. Storer
Associate Standards Editors:
Joan L. Cornillot
Dorothy F. Savini
Senior Assistant Editors:
Sarajane H. Hart
Deborah Richardson
Assistant Editors:
Kenneth W. O'Brien
Andrea L. Stanton
Leigh Anne Loux
Robin E. Craig
Christine S. Fanelle
Paula C. Fazio
Marifa S. Winfree
Elizabeth L. Gutman
Editorial Assistant:
Patricia A. McGee
Senior Indexer:
Harris J. Shupak

Vice-President, Publications and Marketing:
Robert L. Meltzer

Library of Congress Catalog Card Number: 83-641658

ISBN 0-8031-1080-4 (set)
ISBN 0-8031-1079-0 (volume)

ISSN 0192-2998

Copyright © by AMERICAN SOCIETY FOR TESTING AND MATERIALS 1987

Printed in Easton, MD, U.S.A.

D 1114 Discontinued—Replaced by D 2475
D 1115 Discontinued
D 1116 Discontinued
D 1117–80 Methods of Testing Nonwoven Fabrics, **07.01**
D 1118–76(1981) Test Method for Magnetic Rating of Asbestos Fiber and Asbestos Textiles, **07.02**
D 1119–85 Test Method for Ash Content of Engine Coolants and Antirusts, **15.05**
D 1120–83 Test Method for Boiling Point of Engine Antifreezes, **15.05**
D 1121–83 Test Method for Reserve Alkalinity of Engine Antifreeze, Antirusts, and Coolants, **15.05**
D 1122–84 Test Method for Specific Gravity of Engine Coolants by the Hydrometer, **15.05**
D 1123–82 Test Method for Water in Engine Coolant Concentrate by the Karl Fischer Reagent Method, **15.05**
D 1124–82 Specification for Hydrometer-Thermometer Field Tester for Engine Coolants, **15.05**
D 1125–82 Test Methods for Electrical Conductivity and Resistivity of Water, **11.01**
D 1126–86 Test Methods for Hardness in Water, **11.01**
D 1127 Discontinued
D 1128 Discontinued
D 1129–82b Definitions of Terms Relating to Water, **11.01**
D 1130 Discontinued—Replaced by D 1897
D 1131–53(1981) Methods of Testing Rosin Oils, **06.03**
D 1132 Discontinued
D 1133–86 Test Method for Kauri-Butanol Value of Hydrocarbon Solvents, **06.03**
D 1134 Discontinued—Combined with D 1720
D 1135–86 Method for Chemical Analysis of Blue Pigments, **06.02**
D 1136 Discontinued
D 1137 Discontinued
D 1138 Discontinued
D 1139–83 Specification for Crushed Stone, Crush Slag, and Gravel for Single or Multiple Bituminous Surface Treatments, **04.03,04.08**
D 1140–54(1971) Test Method for Amount of Material in Soils Finer Than the No. 200 (75-μm) Sieve, **04.08**
D 1141–86 Specification for Substitute Ocean Water, **11.02**
D 1142–86 Test Method for Water Vapor Content of Gaseous Fuels by Measurement of Dew-Point Temperature, **05.05**
D 1143–81 Method of Testing Piles Under Static Axial Compressive Load, **04.08**
D 1144–84 Recommended Practice for Determining Strength Development of Adhesive Bonds, **15.06**
D 1145 Discontinued
D 1146–53(1981) Test Method for Blocking Point of Potentially Adhesive Layers, **15.06**
D 1147 Redesignated F 36
D 1148–77 Test Method for Rubber Deterioration—Heat and Ultraviolet Light Discoloration of Light-Colored Surfaces, **09.01**
D 1149–86 Test Method for Rubber Deterioration—Surface Ozone Cracking in a Chamber (Flat Specimens), **09.01**
D 1150–55(1982) Method for Single and Multi-Panel Forms for Recording Results of Exposure Tests of Paints, **06.01**
D 1151–84 Test Method for Effect of Moisture and Temperature on Adhesive Bonds, **15.06**
D 1152–84 Specification for Methanol (Methyl Alcohol), **06.03**
D 1153–83 Specification for Methyl Isobutyl Ketone, **06.03**
D 1154 Discontinued
D 1155–53(1983) Test Method for Roundness of Glass Spheres, **06.02**
D 1156 Discontinued
D 1157–84 Test Method for Total Inhibitor Content (TBC) of Light Hydrocarbons, **05.01**
D 1158 Discontinued—Replaced by D 1159
D 1159–84 Test Method for Bromine Number of Petroleum Distillates and Commercial Aliphatic Olefins by Electrometric Titration, **05.01**
D 1160–77 Method for Distillation of Petroleum Products at Reduced Pressure, **05.01**
D 1161 Discontinued
D 1162 Discontinued
D 1163 Discontinued
D 1164 Discontinued
D 1165–80(1987) Nomenclature of Domestic Hardwoods and Softwoods, **04.09**
D 1166–84 Test Method for Methoxyl Groups in Wood and Related Materials, **04.09**
D 1167 Discontinued—Replaced by D 2939
D 1168–84 Methods of Testing Hydrocarbon Waxes Used for Electrical Insulation, **05.01,10.01**
D 1169–86 Test Method for Specific Resistance (Resistivity) of Electrical Insulating Liquids, **10.03**
D 1170 Discontinued—Combined with F 104

D 1171–86 Test Method for Rubber Deterioration—Surface Ozone Cracking Outdoors or Chamber (Triangular Specimens), **09.01**
D 1172–56(1986) Test Method for pH of Aqueous Solutions of Soaps and Detergents, **15.04**
D 1173–53(1986) Test Method for Foaming Properties of Surface-Active Agents, **15.04**
D 1174 Discontinued—Replaced by D 4299
D 1175 Discontinued—Replaced by D 4157 and D 4158
D 1176–71(1983) Methods for Sampling and Preparing Aqueous Solutions of Engine Coolants or Antirusts for Testing Purposes, **15.05**
D 1177–82 Test Method for Freezing Point of Aqueous Engine Coolant Solution, **15.05**
D 1178 Discontinued—Replaced by D 2778
D 1179–80 Test Methods for Fluoride Ion in Water, **11.01**
D 1180–57(1978) Test Method for Bursting Strength of Round Rigid Plastic Tubing, **08.01**
D 1181 Discontinued
D 1182 Discontinued
D 1183–70(1987) Test Methods for Resistance of Adhesive to Cyclic Laboratory Aging Conditions, **15.06**
D 1184–69(1986) Test Methods for Flexural Strength of Adhesive Bonded Laminated Assemblies, **15.06**
D 1185–85 Test Method for Pallets and Related Structures Employed in Materials Handling and Shipping, **15.09**
D 1186–81 Method for Nondestructive Measurement of Dry Film Thickness of Nonmagnetic Coatings Applied to a Ferrous Base, **06.01**
D 1187–82 Test Method for Asphalt-Base Emulsions for Use as Protective Coatings for Metal, **04.04**
D 1188–83 Test Method for Bulk Specific Gravity and Density of Compacted Bituminous Mixtures Using Paraffin-Coated Specimens, **04.03,04.08**
D 1189 Discontinued
D 1190–74(1980) Specification for Concrete Joint Sealer, Hot-Poured Elastic Type, **04.02,04.03**
D 1191–84 Method of Testing Concrete Joint Sealers, **04.02,04.03**
D 1192–70(1977) Specification for Equipment for Sampling Water and Steam, **11.01**
D 1193–77(1983) Specification for Reagent Water, **02.05, 05.05,06.03,09.01,10.01,10.02, 10.03,10.05,11.01,15.09**
D 1194–72(1977) Test Method for Bearing Capacity of Soil for Static Load on Spread Footings, **04.08**
D 1195–64(1977) Methods for Repetitive Static Plate Load Tests of Soils and Flexible Pavement Components, for Use in Evaluation and Design of Airport and Highway Pavements, **04.08**
D 1196–64(1977) Methods for Nonrepetitive Static Plate Load Tests of Soils and Flexible Pavement Components, for Use in Evaluation and Design of Airport and Highway Pavements, **04.08**
D 1197 Redesignated E 197
D 1198–73(1981) Test Method for Solvent Tolerance of Amine Resins, **06.02**
D 1199–86 Specification for Calcium Carbonate Pigments, **06.02**
D 1200–82 Test Method for Viscosity of Paints, Varnishes, and Lacquers by Ford Viscosity Cup, **06.01**
D 1201–81 Specification for Thermosetting Polyester Molding Compounds, **08.01**
D 1202–84 Specification for Plasticized Cellulose Acetate Sheet and Film for Primary Insulation, **10.01**
D 1203–86 Test Methods for Volatile Loss from Plastics Using Activated Carbon Methods, **08.01**
D 1204–84 Test Method for Linear Dimensional Changes of Nonrigid Thermoplastic Sheeting or Film at Elevated Temperature, **08.01**
D 1205 Discontinued
D 1206 Discontinued
D 1207 Discontinued
D 1208–84 Test Methods for Common Properties of Certain Pigments, **06.02**
D 1209–84 Test Method for Color of Clear Liquids (Platinum-Cobalt Scale), **06.03**
D 1210–79(1983) Test Method for Fineness of Dispersion of Pigment-Vehicle Systems, **06.01**
D 1211–74(1980) Test Method for Temperature-Change Resistance of Clear Nitrocellulose Lacquer Films Applied to Wood, **06.01**
D 1212–85 Method for Measurement of Wet Film Thickness of Organic Coatings, **06.01**
D 1213–54(1975) Test Method for Crushing Resistance of Glass Spheres (Intent to Withdraw), **06.02**
D 1214–58(1983) Test Method for Sieve Analysis of Glass Spheres, **06.02**

D 1215 Discontinued
D 1216 Discontinued
D 1217–81 Test Method for Density and Relative Density (Specific Gravity) of Liquids by Bingham Pycnometer, **05.01**
D 1218–82 Test Method for Refractive Index and Refractive Dispersion of Hydrocarbon Liquids, **05.01,10.03**
D 1219 Discontinued—Replaced by D 3227
D 1220–65(1984) Method for Measurement and Calibration of Upright Cylindrical Tanks (Available as Separate Reprint Only)
D 1221 Discontinued
D 1222 Discontinued
D 1223 Discontinued
D 1224–76 Test Method for Zinc and Cadmium in Paper, **15.09**
D 1225 Discontinued
D 1226 Discontinued
D 1227–82 Specification for Emulsified Asphalt Used as a Protective Coating for Built-Up Roofing, **04.04**
D 1228 Discontinued
D 1229–87 Test Method for Rubber Property—Compression Set at Low Temperatures, **09.01**
D 1230–85 Test Method for Flammability of Clothing Textiles, **07.01**
D 1231 Discontinued—Replaced by D 1905
D 1232 Discontinued—Replaced by D 1905
D 1233–81 Specification for Twine Made for Bast and Leaf Fibers, **07.02**
D 1234–85 Method for Sampling and Testing Staple Length of Grease Wool, **07.02**
D 1235 Discontinued—Replaced by D 2497
D 1236 Discontinued—Replaced by D 2497
D 1237 Discontinued—Replaced by D 2497
D 1238–86 Test Method for Flow Rates of Thermoplastics by Extrusion Plastometer, **08.01**
D 1239–55(1982) Test Method for Resistance of Plastic Films to Extraction by Chemicals, **08.01**
D 1240–82 Test Method for Rosin Acids in Fatty Acids, **06.03**
D 1241–68(1979) Specification for Materials for Soil-Aggregate Subbase, Base, and Surface Courses, **04.02,04.08**
D 1242–56(1981) Test Methods for Resistance of Plastic Materials to Abrasion, **08.01**
D 1243–79(1984) Test Method for Dilute Solution Viscosity of Vinyl Chloride Polymers, **08.01**
D 1244–81(1986) Recommended Practice for Designation of Yarn Construction, **07.01**
D 1245–84 Method for Examination of Water-Formed Deposits by Chemical Microscopy, **11.02**
D 1246–82a Test Method for Iodide and Bromide in Water, **11.01**
D 1247 Discontinued
D 1248–84 Specification for Polyethylene Plastics Molding and Extrusion Materials, **08.01,08.04**
D 1249–81 Specification for Octyl Ortho-Phthalate Ester Plasticizers, **08.01**
D 1250–80(1984) Petroleum Measurement Tables (Description only; tables published separately in 12 volumes), **05.01,10.03**
D 1251–79 Test Method for Water Vapor Permeability of Packages by Cycle Method, **15.09**
D 1252–83 Test Method for Chemical Oxygen Demand (Dichromate Oxygen Demand) of Water, **11.01**
D 1253–86 Test Methods for Residual Chlorine in Water, **11.01**
D 1254 Discontinued
D 1255 Discontinued
D 1256 Discontinued
D 1257–84 Specification for High-Gravity Glycerin, **06.03**
D 1258–86 Methods for Testing High-Gravity Glycerin, **06.03**
D 1259–85 Test Method for Nonvolatile Content of Resin Solutions, **06.02**
D 1260 Discontinued—Combined with D 2244
D 1261 Discontinued
D 1262–81 Test Method for Lead in New and Used Greases, **05.01**
D 1263–86 Test Method for Leakage Tendencies of Automotive Wheel Bearing Greases, **05.01**
D 1264–73(1982) Test Method for Water Washout Characteristics of Lubricating Greases, **05.01,05.05**
D 1265–82 Method for Sampling Liquefied Petroleum (LP) Gases, **05.01,05.05**
D 1266–80 Test Method for Sulfur in Petroleum Products (Lamp Method), **05.01,05.05**
D 1267–84 Test Method for Vapor Pressure of Liquefied Petroleum (LP) Gases (LP-Gas Method), **05.01,05.05**
D 1268 Discontinued
D 1269 Discontinued
D 1270 Discontinued
D 1271 Discontinued

D 1721–84 Test Method for Permanganate Time of Tricresyl Phosphate, **06.03**
D 1722–86 Test Method for Water Miscibility of Water-Soluble Solvents, **06.03**
D 1723 Discontinued—Combined with D 1722
D 1724 Discontinued—Replaced by D 555 and D 3725
D 1725–62(1981) Test Method for Viscosity of Resin Solutions, **06.02**
D 1726–73(1980) Test Method for Hydrolyzable Chlorine Content of Liquid Epoxy Resins, **06.02**
D 1727 Discontinued
D 1728–83 Test Method for Phthalate Ester Color of High-Gravity Glycerin, **06.03**
D 1729–82 Practice for Visual Evaluation of Color Differences of Opaque Materials, **06.01**
D 1730–67(1984) Practices for Preparation of Aluminum and Aluminum-Alloy Surfaces for Painting, **02.05,06.01**
D 1731–67(1984) Practices for Preparation of Hot-Dip Aluminum Surfaces for Painting, **02.05,06.01**
D 1732–67(1984) Practices for Preparation of Magnesium Alloy Surfaces for Painting, **02.05,06.01**
D 1733 Discontinued—Replaced by D 1730
D 1734–63(1980) Method of Making and Preparing Concrete and Masonry Panels for Testing Paint Finishes, **06.01**
D 1735–86a Practice for Testing Water Resistance of Coatings Using Water Fog Apparatus, **06.01**
D 1736–79(1984) Test Method for Efflorescence of Interior Wall Paints, **06.01**
D 1737–85 Test Method for Elongation of Attached Organic Coatings with Cylindrical Mandrel Apparatus, **06.01**
D 1738 Discontinued—Replaced by D 2805
D 1739–82 Method for Collection and Analysis of Dustfall (Settleable Particulates), **11.03**
D 1740–85 Test Method for Luminometer Numbers of Aviation Turbine Fuels, **05.02**
D 1741–86 Test Method for Functional Life of Ball Bearing Greases, **05.02**
D 1742–83 Test Method for Oil Separation from Lubricating Grease During Storage, **05.02**
D 1743–73(1981) Test Method for Corrosion Preventive Properties of Lubricating Greases, **05.02**
D 1744–83 Test Method for Water in Liquid Petroleum Products by Karl Fischer Reagent, **05.02**
D 1745 Discontinued—Combined with D 445
D 1746–70(1978) Test Method for Transparency of Plastic Sheeting, **08.02**
D 1747–84 Test Method for Refractive Index of Viscous Materials, **05.02**
D 1748–83 Test Method for Rust Protection by Metal Preservatives in the Humidity Cabinet, **05.02**
D 1749–68(1981) Recommended Practice for Interlaboratory Evaluation of Test Methods Used with Paper and Paper Products, **15.09**
D 1750 Discontinued
D 1751–83 Specification for Preformed Expansion Joint Fillers for Concrete Paving and Structural Construction (Nonextruding and Resilient Bituminous Types), **04.02,04.03**
D 1752–84 Specification for Preformed Sponge Rubber and Cork Expansion Joint Fillers for Concrete Paving and Structural Construction, **04.02,04.03**
D 1753 Discontinued—Replaced by D 3515
D 1754–83 Test Method for Effect of Heat and Air on Asphaltic Materials (Thin-Film Oven Test), **04.03**
D 1755–81 Specification for Poly(Vinyl Chloride) Resins, **08.02**
D 1756–84 Test Method for Carbon Dioxide in Coal, **05.05**
D 1757–86 Test Methods for Sulfur in Ash from Coal and Coke, **05.05**
D 1758–86 Method for Evaluating Wood Preservatives by Field Tests with Stakes, **04.09**
D 1759 Discontinued
D 1760–86 Specification for Pressure Treatment of Timber Products, **04.09**
D 1761–77 Method of Testing Mechanical Fasteners in Wood, **04.09,15.08**
D 1762–84 Method for Chemical Analysis of Wood Charcoal, **04.09**
D 1763–81 Specification for Epoxy Resins, **08.02**
D 1764–62(1986) Specification for Rubber Latex Products for Automotive Applications, **09.02**
D 1765–87a Classification System for Carbon Blacks Used in Rubber Products, **09.01**
D 1766–81 Methods of Testing Rubber Chemicals—Solvent Solubility, **09.01**
D 1767–62(1984) Test Method for Ethylene Diamine Tetraacetate (EDTA) in Soaps or Synthetic Detergents, **15.04**
D 1768–83 Test Method for Sodium Alkylbenzene Sulfonate in Synthetic Detergents by Ultraviolet Absorption, **15.04**
D 1769–77(1982) Test Method for Linear Density of Cotton Fibers (Array Sample), **07.02**
D 1770–85 Test Method for Neps, Vegetable Matter, and Colored Fiber in Wool Top, **07.02**
D 1771 Discontinued
D 1772 Discontinued
D 1773 Discontinued—Replaced by D 1905
D 1774–79 Test Method for Elastic Properties of Textile Fibers, **07.02**
D 1775–81 Test Method for Tension and Elongation of Wide Elastic Fabrics, **07.01**
D 1776–85 Practice for Conditioning Textiles for Testing, **07.01,07.02**
D 1777–64(1975) Method for Measuring Thickness of Textile Materials, **07.01**
D 1778 Discontinued
D 1779–65(1983) Specification for Adhesive for Acoustical Materials, **15.06**
D 1780–72(1983) Recommended Practice for Conducting Creep Tests of Metal-to-Metal Adhesives, **15.06**
D 1781–76(1986) Method for Climbing Drum Peel Test for Adhesives, **15.06**
D 1782–78(1985) Test Methods for Operating Performance of Particulate Cation-Exchange Materials, **11.02**
D 1783–80 Test Methods for Phenolic Compounds in Water, **11.02**
D 1784–81 Specification for Rigid Poly(Vinyl Chloride) (PVC) Compounds and Chlorinated Poly(Vinyl Chloride) (CPVC) Compounds, **08.02,08.04**
D 1785–86 Specification for Poly(Vinyl Chloride) (PVC) Plastic Pipe, Schedules 40, 80, and 120, **08.04**
D 1786–73(1978) Specification for Toluenediisocyanate, **08.02**
D 1787–62(1985) Test Method for Pentosans in Cellulose, **15.04**
D 1788–81 Specification for Rigid Acrylonitrile-Butadiene-Styrene(ABS) Plastics, **08.02,08.04**
D 1789 Discontinued
D 1790–83 Test Method for Brittleness Temperature of Plastic Film by Impact, **08.02**
D 1791–87 Test Method for Accelerated Aging of Liquid Water-Emulsion Floor Polishes, **15.04**
D 1792–82 Test Method for Long-Term Removability Properties of Emulsion Floor Polishes, **15.04**
D 1793–87 Test Method for Water Spotting of Emulsion Floor Polishes, **15.04**
D 1794–62(1985) Test Method for Alcohol-Benzene Soluble Matter in Cellulose, **15.04**
D 1795–62(1985) Test Method for Intrinsic Viscosity of Cellulose, **15.04**
D 1796–83 Test Method for Determination of Water and Sediment in Fuel Oils by the Centrifuge Method (Laboratory Procedure), **05.02**
D 1797 Discontinued
D 1798 Discontinued
D 1799–83 Test Method for Carbon Black—Sampling Packaged Shipments, **09.01**
D 1800 Discontinued
D 1801 Discontinued
D 1802 Discontinued
D 1803 Discontinued
D 1804 Discontinued
D 1805 Discontinued
D 1806 Discontinued—Combined with D 1807
D 1807–84 Test Methods for Refractive Index and Specific Optical Dispersion of Electrical Insulating Liquids, **10.03**
D 1808 Discontinued
D 1809 Discontinued—Combined with D 923
D 1810–63(1983) Test Method for Specific Gravity of Askarels, **10.03**
D 1811 Discontinued—Replaced by D 1821
D 1812 Discontinued
D 1813–70(1983) Method for Measuring Thickness of Leather Test Specimens, **15.04**
D 1814–70(1983) Method for Measuring Thickness of Leather Units, **15.04**
D 1815–70(1980) Test Method for Water Absorption (Static) of Leather, **15.04**
D 1816–84a Test Method for Dielectric Breakdown Voltage of Insulating Oils of Petroleum Origin Using VDE Electrodes, **10.03**
D 1817–81 Methods of Testing Rubber Chemicals—Density, **09.01**
D 1818–84 Specification for Continuity of Quality of Electrical Insulating Oil for Low-Pressure Cable Systems, **10.03**
D 1819–84 Specification for Continuity of Quality of Electrical Insulating Oil for High-Pressure Cable Systems, **10.03**
D 1820–84 Test Method for Hydrolyzable Chlorine Compounds in Chlorinated Aromatic Hydrocarbons (Askarels), **10.03**
D 1821–84 Test Method for Inorganic Chlorides in Askarels, **10.03**
D 1822–84 Test Method for Tensile-Impact Energy to Break Plastics and Electrical Insulating Materials, **08.02**
D 1822M–84a Test Method for Tensile Impact Energy to Break Plastics and Electrical Insulating Materials [Metric], **08.02**
D 1823–82 Test Method for Apparent Viscosity of Plastisols and Organosols at High Shear Rates by Extrusion Viscometer, **08.02**
D 1824–83 Test Method for Apparent Viscosity of Plastisols and Organosols at Low Shear Rates by Brookfield Viscometer, **08.02**
D 1825–87 Recommended Practice for Etching and Cleaning Copper-Clad Electrical Insulating Materials and Thermosetting Laminates for Electrical Testing, **10.01**
D 1826–83 Test Method for Calorific Value of Gases in Natural Gas Range by Continuous Recording Calorimeter, **05.05**
D 1827–84 Test Method for Gas Content (Nonacidic) of Insulating Liquids by Displacement with Carbon Dioxide, **10.03**
D 1828–70(1987) Recommended Practice for Atmospheric Exposure of Adhesive-Bonded Joints and Structures, **15.06**
D 1829–86 Test Method for Electrical Resistance of Ceramic Materials at Elevated Temperatures, **10.01**
D 1830–84 Test Method for Thermal Endurance of Flexible Sheet Materials Used for Electrical Insulation by the Curved Electrode Method, **10.01**
D 1831–83 Test Method for Roll Stability of Lubricating Grease, **05.02**
D 1832–65(1982) Test Method for Peroxide Number of Petroleum Wax, **05.02,15.09**
D 1833–64(1982) Test Method for Odor of Petroleum Wax, **05.02,15.09**
D 1834–85 Test Method for 20-deg Specular Gloss of Waxed Paper, **05.02,15.09**
D 1835–86 Specification for Liquefied Petroleum (LP) Gases, **05.02,05.05**
D 1836–83 Specification for Commercial Hexanes, **05.02,06.03**
D 1837–86 Test Method for Volatility of Liquefied Petroleum (LP) Gases, **05.02,05.05**
D 1838–84 Test Method for Copper Strip Corrosion by Liquefied Petroleum (LP) Gases, **05.02,05.05**
D 1839–80 Test Method for Amyl Nitrate in Diesel Fuels, **05.02**
D 1840–84 Test Method for Naphthalene Hydrocarbons in Aviation Turbine Fuels by Ultraviolet Spectrophotometry, **05.02**
D 1841–63(1984) Specification for Distilled Coconut Fatty Acids, **06.03**
D 1842–63(1984) Specification for Distilled Corn Fatty Acids, **06.03**
D 1843–63(1984) Specification for Fractionated and Distilled Cottonseed Fatty Acids, **06.03**
D 1844–86 Method for Chemical Analysis of Basic Lead Silicochromate, **06.02**
D 1845–86 Method for Chemical Analysis of Strontium Chromate Pigment, **06.02**
D 1846 Discontinued—Combined with D 2448
D 1847–73(1980) Test Methods for Total Chlorine Content of Epoxy Resins, **06.02**
D 1848–63(1984) Classification for Reporting Paint Film Failures Characteristic of Exterior Latex Paints, **06.01**
D 1849–80 Test Method for Package Stability of Paint, **06.01**
D 1850–74(1979) Specification for Concrete Joint Sealer, Cold-Application Type, **04.02,04.03**
D 1851–67(1977) Methods of Testing Concrete Joint Sealers, Cold-Application Type, **04.02,04.03**
D 1852 Discontinued
D 1853 Discontinued
D 1854–74(1985) Specification for Jet-Fuel-Resistant Concrete Joint Sealer, Hot-Poured Elastic Type, **04.02,04.03**
D 1855–69(1985) Methods of Testing Jet-Fuel-Resistant Concrete Joint Sealer, Hot-Poured Elastic Type, **04.02,04.03**
D 1856–79(1984) Test Method for Recovery of Asphalt from Solution by Abson Method, **04.03**
D 1857–68(1987) Test Method for Fusibility of Coal and Coke Ash, **05.05**
D 1858–63(1981) Specification for Creosote-Petroleum Solution, **04.09**
D 1859–71(1981) Specification for Petroleum for Blending with Creosote, **04.09**
D 1860–86 Test Method for Moisture and Creosote-Type Preservative in Wood, **04.09**
D 1861–77(1981) Specification for Homogeneous Bituminized Fiber Drain and Sewer Pipe, **04.04**
D 1862–77(1981) Specification for Laminated-Wall Bituminized Fiber Drain and Sewer Pipe, **04.04**
D 1863–86 Specification for Mineral Aggregate Used on Built-Up Roofs, **04.02,04.04**

1911 Discontinued
1912-69(1984) Test Method for Cold-Crack Resistance of Upholstery Leather, **15.04**
1913-63(1984) Test Method for Resistance to Wetting of Garment-Type Leathers (Spray Test), **15.04**
1914-68(1983) Recommended Practice for Conversion Units and Factors Relating to Atmospheric Analysis, **11.03**
1915-63(1985) Method for Chromatographic Analysis of Chemically Refined Cellulose, **15.04**
1916-69(1980) Test Method for Penetration of Adhesives, **15.06**
1917-84 Test Method for Rubber Property in Shrinkage of Raw and Compounded Styrene-Butadiene Rubber, **09.01**
1918-72(1977) Test Method for Asbestos Content of Asbestos Textiles, **07.02**
1919 Discontinued
1920 Discontinued
1921-63(1975) Test Method for Particle Size (Sieve Analysis) of Plastic Materials, **08.02**
1922-67(1986) Test Method for Propagation Tear Resistance of Plastic Film and Thin Sheeting by Pendulum Method, **08.02**
1923 Discontinued
1924 Redesignated G 21
1925-70(1977) Test Method for Yellowness Index of Plastics, **08.02**
1926-63(1985) Test Methods for Carboxyl Content of Cellulose, **06.02,15.04**
1927-81 Specification for Rigid Poly(Vinyl Chloride) Plastic Sheet, **08.02**
1928-80 Method for Preparation of Compression-Molded Test Sheets and Test Specimens, **08.02**
1929-77(1985) Test Method for Ignition Properties of Plastics, **08.02**
1930 Discontinued
1931-79(1984) Specification for Fully Cured Silicone Rubber-Coated Glass Fabric and Tapes for Electrical Insulation, **10.01**
1932-85 Test Method for Thermal Endurance of Flexible Electrical Insulating Varnishes, **10.01**
1933-84 Specification for Nitrogen Gas as an Electrical Insulating Material, **10.03**
1934-84 Method for Oxidative Aging of Electrical Insulating Petroleum Oils by Open-Beaker Method, **10.03**
1935 Discontinued
1936 Discontinued
1937-84 Methods of Testing Carbon Black, Pelleted--Mass Strength, **09.01**
1938-67(1978) Test Method for Tear Propagation Resistance of Plastic Film and Thin Sheeting by a Single-Tear Method, **08.02**
1938-85 Test Method for Tear Propagation Resistance of Plastic Film and Thin Sheeting by a Single-Tear Method, **08.02**
1939-84 Practice for Determining Residual Stresses in Extruded or Molded Acrylonitrile-Butadiene-Styrene (ABS) Parts by Immersion in Glacial Acetic Acid, **08.02**
1940 Discontinued
1941-67(1975) Method for Open Channel Flow Measurement of Water and Waste Water by the Parshall Flume, **11.01**
1942-80 Test Method for Morpholine in Water, **11.02**
1943-81 Test Method for Alpha Particle Radioactivity of Water, **11.02,12.01**
1944 Discontinued
1945-81 Method for Analysis of Natural Gas by Gas Chromatography, **05.05**
1946-82 Method for Analysis of Reformed Gas by Gas Chromatography, **05.05**
1947-83 Test Method for Load-Carrying Capacity of Petroleum Oil and Synthetic Fluid Gear Lubricants, **05.02**
1948 Discontinued—Replaced by D 2700
1949-79(1984) Test Method for Separation of Tetraethyllead and Tetramethyllead in Gasoline, **05.02**
1950-86 Test Method for Acetone Tolerance of Heat-Bodied Drying Oils, **06.03**
1951-86 Test Method for Ash in Drying Oils and Fatty Acids, **06.03**
1952-86 Test Method for Break in Drying Oils, Quantitative, **06.03**
1953 Discontinued—Replaced by D 1640
1954-86 Test Method for Foots in Raw Linseed Oil (Volumetric Method), **06.03**
1955-85 Test Method for Gel Time of Drying Oils, **06.03**
1956 Discontinued—Replaced by D 555
1957-86 Test Method for Hydroxyl Value of Fatty Oils and Acids, **06.03**

1958-86 Test Method for Matter Insoluble in Chloroform in Oiticica Oil, **06.03**
1959-69(1984) Test Method for Iodine Value of Drying Oils and Fatty Acids, **06.03**
1959-85 Test Method for Iodine Value of Drying Oils and Fatty Acids, **06.03**
1960-86 Test Method for Loss on Heating of Drying Oils, **06.03**
1961 Discontinued—Replaced by D 1358
1962-85 Test Method for Saponification Value of Drying Oils, Fatty Acids and Polymerized Fatty Acids, **06.03**
1963-85 Test Method for Specific Gravity of Drying Oils, Varnishes, Resins, and Related Materials at 25/25°C, **06.03**
1964-85 Test Method for Tung Oil Quality, **06.03**
1965-85 Test Method for Unsaponifiable Matter in Drying Oils, Fatty Acids, and Polymerized Fatty Acids, **06.03**
1966-69(1981) Test Method for Foots in Raw Linseed Oil (Gravimetric Method), **06.03**
1967-86 Test Method for Color After Heating of Drying Oils, **06.03**
1968 Not yet assigned
1969 Not yet assigned
1970 Not yet assigned
1971 Not yet assigned
1972 Not yet assigned
1973 Not yet assigned
1974 Not yet assigned
1975 Not yet assigned
1976 Not yet assigned
1977 Not yet assigned
1978 Not yet assigned
1979 Not yet assigned
1980-85 Test Method for Acid Value of Fatty Acids and Polymerized Fatty Acids, **06.03**
1981-86 Test Method for Color After Heating of Fatty Acids, **06.03**
1982-85 Test Method for Titer of Fatty Acids, **06.03**
1983-75(1980) Test Method for Fatty Acid Composition by Gas-Liquid Chromatography of Methyl Esters, **06.03**
1984-69(1984) Specification for Tall Oil Fatty Acids, **06.03**
1985 Not yet assigned
1986 Not yet assigned
1987 Not yet assigned
1988 Not yet assigned
1989 Not yet assigned
1990 Not yet assigned
1991 Not yet assigned
1992 Not yet assigned
1993 Not yet assigned
1994 Not yet assigned
1995 Not yet assigned
1996 Not yet assigned
1997 Not yet assigned
1998 Not yet assigned
1999 Not yet assigned
2000-86 Classification System for Rubber Products in Automotive Applications, **09.01,09.02**
2001-86 Test Method for Dependanization of Gasoline and Naphthas, **05.02**
2002-86 Method for Isolation of Representative Saturates Fraction from Low-Olefinic Petroleum Naphthas, **05.02**
2003-86 Method for Isolation of Representative Saturates Fraction from High-Olefinic Petroleum Naphthas, **05.02**
2004 Discontinued
2005 Discontinued
2006 Discontinued
2007-86 Test Method for Characteristic Groups in Rubber Extender and Processing Oils by the Clay Gel Adsorption Chromatographic Method, **05.02,09.01,10.03**
2008-85 Test Method for Ultraviolet Absorbance and Absorptivity of Petroleum Products, **05.02**
2009-65(1979) Recommended Practice for Collection by Filtration and Determination of Mass, Number, and Optical Sizing of Atmospheric Particulates, **11.03**
2010-85 Method for Evaluation of Total Sulfation Activity in the Atmosphere by the Lead Dioxide Candle, **11.03**
2011 Discontinued
2012 Discontinued
2013-86 Method for Preparing Coal Samples for Analysis, **05.05**
2014-85 Test Method for Expansion or Contraction of Coal by the Sole-Heated Oven, **05.05**
2015-85 Test Method for Gross Calorific Value of Solid Fuel by the Adiabatic Bomb Calorimeter, **05.05**
2016-74(1983) Test Methods for Moisture Content of Wood, **04.09**

2017-81(1986) Method for Accelerated Laboratory Test of Natural Decay Resistance of Woods, **04.09**
2018 Discontinued
2019 Discontinued
2020 Discontinued
2021-65(1985) Specification for Neutral Detergent, 40 Percent Alkylbenzene Sulfonate Type, **15.04**
2022-64(1980) Method for Sampling and Chemical Analysis of Chlorine-Containing Bleaches, **15.04**
2023-83 Method for Analysis for Sodium Toluene Sulfonate in Detergents, **15.04**
2024-65(1986) Test Method for Cloud Point of Nonionic Surfactants, **15.04**
2025 Redesignated F 37
2026-72(1985) Specification for Cutback Asphalt (Slow-Curing Type), **04.03**
2027-76(1986) Specification for Cutback Asphalt (Medium-Curing Type), **04.03**
2028-76(1986) Specification for Cutback Asphalt (Rapid-Curing Type), **04.03**
2029-81(1986) Test Methods for Water Vapor Content of Electrical Insulating Gases by Measurement of Dew-Point, **10.03**
2030-84 Test Method for Water Solubility of Refined Pyridine, **06.03**
2031-84 Method for Reducing Substances in Refined Pyridine, **06.03**
2032-68(1982) Specification for Deuterium Oxide (Intent to Withdraw), **11.02,12.01**
2033-73(1979) Test Method for Consumption of Potassium Permanganate by Impurities in Deuterium Oxide (Intent to Withdraw), **11.02,12.01**
2034 Discontinued
2035-80 Recommended Practice for Coagulation-Flocculation Jar Test of Water, **11.02**
2036-82 Test Methods for Cyanides in Water, **11.02**
2037 Discontinued
2038-83 Test Method for Radioactive Barium in Water, **11.02,12.01**
2039-83 Test Method for Radioactive Manganese in Water, (Intent to Withdraw) **11.02,12.01**
2040 Discontinued
2041-78 Test Method for Theoretical Maximum Specific Gravity of Bituminous Paving Mixtures, **04.03**
2042-81(1985) Test Method for Solubility of Asphalt Materials in Trichloroethylene, **04.03**
2043 Discontinued
2044 Discontinued
2045 Discontinued
2046 Discontinued—Replaced by D 2834
2047-82 Test Method for Static Coefficient of Friction of Polish-Coated Floor Surfaces as Measured by the James Machine, **15.04**
2048-87 Test Method for Powdering of Floor Polish Films, **15.04**
2049 Discontinued—Replaced by D 4253—D 4256
2050-87 Definitions of Terms Relating to Zippers, **07.02**
2051-86 Test Method for Durability of Finish of Zippers to Laundering, **07.02**
2052-85 Test Method for Colorfastness of Zippers to Drycleaning, **07.02**
2053-86 Test Method for Colorfastness of Zippers to Light, **07.02**
2054-86 Test Method for Colorfastness of Zipper Tapes to Crocking, **07.02**
2055 Discontinued
2056 Discontinued
2057-85 Test Method for Colorfastness of Zippers to Laundering, **07.02**
2058-87 Test Method for Durability of Finish of Zippers to Drycleaning, **07.02**
2059-87 Test Method for Resistance of Zippers to Salt Spray (Fog), **07.02**
2060-85 Method for Measuring Zipper Dimensions, **07.02**
2061-87 Methods for Strength Tests for Zippers, **07.02**
2062-87 Test Methods for Operability of Zippers, **07.02**
2063 Not yet assigned
2064 Not yet assigned
2065 Not yet assigned
2066 Not yet assigned
2067 Not yet assigned
2068 Not yet assigned
2069 Not yet assigned
2070 Not yet assigned
2071-75(1980) Methods of Testing Fatty Nitrogen Products, **06.03**

D 2673–84 Specification for Oriented Polypropylene Film, **08.02**
D 2674–72(1984) Method for Analysis of Sulfochromate Etch Solution Used in Surface Preparation of Aluminum, **15.06**
D 2675 Discontinued
D 2676 Redesignated G 22
D 2677 Discontinued
D 2678–82 Recommended Practice for Spinning Tests on the Cotton System for Measurement of Yarn Properties, **07.02**
D 2679 Discontinued—to be replaced by D 4470
D 2680–86 Specification for Acrylonitrile-Butadiene-Styrene (ABS) and Poly(Vinyl Chloride) (PVC) Composite Sewer Piping, **08.04**
D 2681 Discontinued—Replaced by D 3112
D 2682 Discontinued
D 2683–86 Specification for Socket-Type Polyethylene Fittings for Outside Diameter-Controlled Polyethylene Pipe and Tubing, **08.04**
D 2684–84 Test Method for Permeability of Thermoplastic Containers to Packaged Reagents or Proprietary Products, **08.02**
D 2685–84 Test Method for Nitrogen and Carbon Tetrafluoride in Sulfur Hexafluoride by Gas Chromatography, **10.03**
D 2686–84 Specification for Tetrafluorethylene-Backed Pressure-Sensitive Electrical Insulating Tape, **10.01**
D 2687–84 Methods of Sampling Particulate Ion-Exchange Materials, **11.02**
D 2688–83 Test Method for Corrosivity of Water in the Absence of Heat Transfer (Weight Loss Methods), **03.02,11.01**
D 2689–80 Recommended Practices for Testing Alkyd Resins, **06.02**
D 2690–80 Test Method for Isophthalic Acid in Alkyd and Polyester Resins, **06.02**
D 2691–70(1981) Method for Microscopical Measurement of Dry Film Thickness of Coatings on Wood Products, **06.01**
D 2692–79 Test Method for Air Wicking of Tire Fabrics, **07.01**
D 2693–83 Specification for Ethylene Glycol, **06.03**
D 2694–83 Specification for Diethylene Glycol, **06.03**
D 2695–83 Specification for Propylene Glycol, **06.03**
D 2696–83 Specification for Dipropylene Glycol, **06.03**
D 2697–86 Test Method for Volume Nonvolatile Matter in Clear or Pigmented Coatings, **06.01**
D 2698–84 Method for Determination of Pigment Content of Solvent-Type Paints by High Speed Centrifuging, **06.01**
D 2699–86 Test Method for Knock Characteristics of Motor Fuels by the Research Method (Not Available as Separate Reprint), **05.04**
D 2700–86 Test Method for Knock Characteristics of Motor and Aviation Fuels by the Motor Method (Not Available as Separate Reprint), **05.04**
D 2701 Discontinued—Replaced by D 1394
D 2702–87 Practice for Rubber Chemicals—Determination of Infrared Absorption Characteristics, **09.01**
D 2703–82 Recommended Practice for Rubber Chemicals—Determination of Ultraviolet Absorption Characteristics, **09.01**
D 2704 Discontinued
D 2705 Discontinued
D 2706 Discontinued
D 2707–85 Test Method for Hard Rubber in Tension, **09.01**
D 2708–81 Specification for Extra-Heavy-Duty Acrylonitrile-Butadiene/Poly(Vinyl Chloride) (NBR/PVC) Jacket for Wire and Cable, **10.02**
D 2709–82 Test Method for Water and Sediment in Distillate Fuels by Centrifuge, **05.02**
D 2710–84a Test Method for Bromine Index of Petroleum Hydrocarbons by Electrometric Titration, **05.02**
D 2711–86 Test Method for Demulsibility Characteristics of Lubricating Oils, **05.02**
D 2712–85 Test Method for Hydrocarbon Traces in Propylene Concentrates by Gas Chromatography, **05.02**
D 2713–86 Test Method for Dryness of Propane (Valve Freeze Method), **05.02**
D 2714–68(1983) Method for Calibration and Operation of the Alpha Model LFW-1 Friction and Wear Testing Machine, **05.02**
D 2715–86 Test Method for Volatilization Rates of Lubricants in Vacuum, **05.02**
D 2716 Discontinued
D 2717–86 Test Method for Thermal Conductivity of Liquids, **05.02,14.01**
D 2718–76(1986) Method of Testing Plywood in Rolling Shear (Shear in Plane of Plies, **04.09**
D 2719–76(1981) Method of Testing Plywood in Shear Through-the-Thickness, **04.09**
D 2720–77(1983) Practice for Calculation of Commercial Weight and Yield of Scoured Wool, Top, and Noil for Various Commercial Compositions, **07.02**
D 2721–77 Test Method for Effects of Drycleaning on Permanence of Durable Water-Repellent Finish, **07.01**
D 2722 Discontinued—Replaced by D 2699
D 2723 Discontinued—Replaced by D 2700
D 2724–87 Method of Testing Bonded and Laminated Apparel Fabrics, **07.01**
D 2725–87 Test Method for Hydrogen Sulfide in Natural Gas (Methylene Blue Method), **05.05**
D 2726–86 Test Method for Bulk Specific Gravity of Compacted Bituminous Mixtures Using Saturated Surface-Dry Specimens, **04.03**
D 2727 Discontinued
D 2728–83 Recommended Practice for Paving Uses and Application Temperatures for Road Tars, **04.03**
D 2729–85 Specification for Poly(Vinyl Chloride) (PVC) Sewer Pipe and Fittings, **08.04**
D 2730–80 Test Method for Sag Flow of Highly Viscous Resins (Intent to Withdraw), **08.02**
D 2731 Discontinued
D 2732–83 Test Method for Unrestrained Linear Thermal Shrinkage of Plastic Film and Sheeting, **08.02**
D 2733 Discontinued—Replaced by D 3846
D 2734–70(1985) Test Method for Void Content of Reinforced Plastics, **08.02**
D 2735 Discontinued
D 2736 Discontinued
D 2737–85 Specification for Polyethylene (PE) Plastic Tubing, **08.04**
D 2738 Discontinued
D 2739–72(1984) Test Method for Volume Resistivity of Conductive Adhesives, **15.06**
D 2740–83 Specification for Poly(Vinyl Chloride (PVC) Plastic Tubing, **08.04**
D 2741–84 Test Method for Susceptibility of Polyethylene Bottles to Soot Accumulation, **08.02**
D 2742–79 Method for Chemical Analysis of Tribasic Lead Phosphosilicate, **06.02**
D 2743–68(1981) Recommended Practices for Uniformity of Traffic Paint Vehicle Solids by Spectroscopy and Gas Chromatography, **06.01**
D 2744–68(1979) Specification for Tribasic Lead Phosphosilicate, (Intent to Withdraw) **06.02**
D 2745–80 Test Method for Instrumental Tinting Strength of White Pigments, **06.02**
D 2746 Not yet assigned
D 2747 Discontinued
D 2748 Discontinued—Replaced by D 4471
D 2749–68(1984) Symbols for Dimensions of Plastic Pipe Fittings, **08.04**
D 2750–85 Specification for Acrylonitrile-Butadiene-Styrene(ABS) Plastic Utilities Conduit and Fittings, **08.04**
D 2751–83a Specification for Acrylonitrile-Butadiene-Styrene(ABS) Sewer Pipe and Fittings, **08.04**
D 2752–72(1985) Test Method for Air Permeability of Asbestos Fibers, **04.05,07.02,08.02**
D 2753–83 Specification for Electrolytic Capacitor Paper, **10.01**
D 2754–84 Specification for High-Temperature Glass Cloth Pressure-Sensitive Electrical Tape, **10.01**
D 2755–84 Method for Sampling and Reduction to Test Weight of Electrical Grade Magnesium Oxide, **10.02**
D 2756–85 Test Method for Weight Loss of Electrical Insulating Varnishes, **10.01**
D 2757–86 Specification for Impervious Steatite Ceramics for Electrical and Electronic Applications, **10.01**
D 2758–86 Method of Testing Engine Coolants by Engine Dynamometer, **15.05**
D 2759–84 Method for Sampling Gas from a Transformer Under Positive Pressure, **10.03**
D 2760–70(1985) Method for Analysis of Sodium Triphosphate by the Simplified Paper Chromatographic Method, **15.04**
D 2761–85 Method for Analysis of Sodium Triphosphate by the Simplified Ion Exchange Method, **15.04**
D 2762–70(1985) Specification for Drycleaning Detergent, Non-Charge Type, **15.04**
D 2763–70(1985) Specification for Drycleaning Detergent, Liquid Charge Type, **15.04**
D 2764–81(1986) Test Method for Dimethylformamide-Insoluble(DMF-I) Content of Tar and Pitch, **04.04**
D 2765–84 Test Methods for Determination of Gel Content and Swell Ratio of Crosslinked Ethylene Plastics, **08.02**
D 2766–86 Test Method for Specific Heat of Liquids and Solids, **05.02**
D 2767 Redesignated F 317
D 2768–83 Specification for General-Purpose Ethylene-Propylene Rubber Jacket for Wire and Cable, **10.02**
D 2769–81 Method of Testing Rubber Hose Used for Liquefied Petroleum Gas-Extractable Material, and Vapor Transmission (Intent to Withdraw), **09.02**
D 2770–80(1987) Specification for Ozone-Resisting Ethylene-Propylene Rubber Integral Insulation and Jacket for Wire and Cable, **10.02**
D 2771–83 Test Methods for Compaction Density of Electrical Grade Magnesium Oxide, **10.02**
D 2772–84 Method for Sieve Analysis of Electrical Grade Magnesium Oxide, **10.02**
D 2773–86 Test Method for Loss on Ignition of Electrical Grade Magnesium Oxide, **10.02**
D 2774–72(1983) Recommended Practice for Underground Installation of Thermoplastic Pressure Piping, **08.04**
D 2775 Discontinued
D 2776–79 Test Methods for Corrosivity of Water in the Absence of Heat Transfer (Electrical Methods), **03.02,11.01**
D 2777–86 Practice for Determination of Precision and Bias of Methods of Committee D-19 on Water, **11.01**
D 2778 Discontinued
D 2779–86 Method for Estimation of Solubility of Gases in Petroleum Liquids, **05.02**
D 2780–86 Test Method for Solubility of Fixed Gases in Liquids, **05.02**
D 2781–82 Test Method for Compatibility of Fuel Oil Blends by Spot Test, **05.02**
D 2782–77(1982) Method for Measurement of Extreme-Pressure Properties of Lubricating Fluids (Timken Method), **05.02**
D 2783–83 Method for Measurement of Extreme-Pressure Properties of Lubricating Fluids (Four-Ball Method), **05.02**
D 2784–80 Test Method for Sulfur in Liquefied Petroleum Gases (Oxy-Hydrogen Burner or Lamp), **05.02**
D 2785–80 Test Method for Trace Quantities of Total Sulfur (Wickbold and Beckman Combustion Apparatus), **05.02**
D 2786–86 Method for Hydrocarbon Types Analysis of Gas-Oil Saturate Fractions by High Ionizing Voltage Mass Spectrometry, **05.02**
D 2787 Discontinued
D 2788–72(1977) Test Method for Trace Metals in Gas Turbine Fuels (Atomic Absorption Method), **05.02**
D 2789–86 Test Method for Hydrocarbon Types in Low Olefinic Gasoline by Mass Spectrometry, **05.02**
D 2790–83 Methods of Analysis of Solvent Systems Used for Removal of Water-Formed Deposits, **11.02**
D 2791–84 Methods of Continuous Determination of Sodium in Water, **11.01**
D 2792–69(1981) Test Method for Solvent and Fuel Resistance of Traffic Paint, **06.01**
D 2793–69(1980) Test Method for Block Resistance of Organic Coatings on Wood Substrates, **06.01**
D 2794–84 Test Method for Resistance of Organic Coatings on the Effects of Rapid Deformation (Impact), **06.01**
D 2795–86 Method for Analysis of Coal and Coke Ash, **05.05**
D 2796–82 Definitions of Terms Used for the Megascopic Description of Coal and Coal Beds and for Microscopical Description and Analysis of Coal, **05.05**
D 2797–85 Methods of Preparing Coal Samples for Microscopical Analysis by Reflected Light, **05.05**
D 2798–85 Method for Microscopical Determination of the Reflectance of the Organic Components in a Polished Specimen of Coal, **05.05**
D 2799–86 Method for Microscopical Determination of Volume Percent of Physical Components of Coal, **05.05**
D 2800–75(1980) Method for Preparation of Methyl Esters from Oils for Determination of Fatty Acid Composition by Gas Chromatography, **06.03**
D 2801–69(1981) Test Method for Leveling Characteristics of Paint by Draw-Down Method, **06.01**
D 2802–87 Specification for Ozone-Resistant Ethylene-Propylene Rubber Insulation for Wire and Cable, **10.02**
D 2803–82 Test Method for Filiform Corrosion Resistance of Organic Coatings on Metal, **06.01**
D 2804–84 Test Method for Purity of Methyl Ethyl Ketone by Gas Chromatography, **06.03**
D 2805–85 Test Method for Hiding Power of Paints by Reflectometry, **06.01**
D 2806 Discontinued
D 2807–78(1984) Test Method for Chromic Oxide in Leather (Perchloric Acid Oxidation), **15.04**
D 2808–69(1984) Test Method for Compressive Strength of Corrugated Fiberboard (Short Column Test), **15.09**
D 2809–83 Test Method for Cavitation Erosion-Corrosion Characteristics of Aluminum Pumps with Engine Coolants, **15.05**
D 2810–72(1983) Test Method for pH of Leather, **15.04**
D 2811–77(1983) Method for Spinning Tests on the Cotton System for Measurement of Spinning Performance, **07.02**
D 2812–81 Test Method for Non-Lint Content of Cotton, **07.02**
D 2813–84 Practice for Sampling Leather for Physical and Chemical Tests, **15.04**
D 2814 Discontinued

D 3168–85 Recommended Practice for Qualitative Identification of Polymers in Emulsion Paints, **06.01,06.02**
D 3169–73(1984) Specification for Once-Refined Sunflower Oil, Technical Grade, **06.03**
D 3170–74(1980) Test Method for Chip Resistance of Coatings, **06.01**
D 3171–76(1982) Test Method for Fiber Content of Resin-Matrix Composites by Matrix Digestion, **15.03**
D 3172–73(1984) Method for Proximate Analysis of Coal and Coke, **05.05**
D 3173–87 Test Method for Moisture in the Analysis Sample of Coal and Coke, **05.05**
D 3174–82 Test Method for Ash in the Analysis Sample of Coal and Coke from Coal, **05.05**
D 3175–82 Test Method for Volatile Matter in the Analysis Sample of Coal and Coke, **05.05**
D 3176–84 Method for Ultimate Analysis of Coal and Coke, **05.05**
D 3177–84 Test Method for Total Sulfur in the Analysis Sample of Coal and Coke, **05.05**
D 3178–84 Test Method for Carbon and Hydrogen in the Analysis Sample of Coal and Coke, **05.05**
D 3179–84 Test Method for Nitrogen in the Analysis Sample of Coal and Coke, **05.05**
D 3180–84 Method for Calculating Coal and Coke Analyses from As-Determined to Different Bases, **05.05**
D 3181–80 Recommended Practice for Conducting Wear Testing on Textile Garments, **07.01**
D 3182–87 Recommended Practice for Rubber—Materials, Equipment, and Procedures for Mixing Standard Compounds and Preparing Standard Vulcanized Sheets, **09.01**
D 3183–84 Practice for Rubber—Preparation of Pieces for Test Purposes from Products, **09.01**
D 3184–80 Methods for Rubber—Evaluation of NR (Natural Rubber), **09.01**
D 3185–87 Methods for Rubber—Evaluation of SBR (Styrene-Butadiene Rubber) Including Mixtures with Oil, **09.01**
D 3186–86 Methods for Rubber—Evaluation of SBR (Styrene-Butadiene Rubber) Mixed with Carbon Black or Carbon Black and Oil, **09.01**
D 3187–85 Methods for Rubber—Evaluation of NBR (Acrylonitrile-Butadiene Rubber), **09.01**
D 3188–87 Methods for Rubber—Evaluation of IIR (Isobutene-Isoprene Rubber), **09.01**
D 3189–85 Methods for Rubber—Evaluation of Solution BR (Polybutadiene Rubber), **09.01**
D 3190–86 Methods for Rubber—Evaluation of General-Purpose CR (Chloroprene Rubber), **09.01**
D 3191–83 Test Methods for Carbon Black in SBR (Styrene-Butadiene Rubber)—Recipe and Evaluation Procedures, **09.01**
D 3192–85 Test Methods for Carbon Black in NR (Natural Rubber)—Formulation and Evaluation Procedures, **09.01**
D 3193 Not yet assigned
D 3194–84 Methods of Testing Rubber from Natural Sources—Plasticity Retention Index (PRI), **09.01**
D 3195–73(1985) Practice for Rotameter Calibration, **11.03**
D 3196 Discontinued—Replaced by D 412
D 3197 Discontinued
D 3198–84 Test Method for Measuring Application and Removal Torque of Threaded or Lug-Style Closures, **15.09**
D 3199–84 Test Method for Water Vapor Transmission Through Screw-Cap Closure Liners, **15.09**
D 3200–74(1986) Specification and Methods for Establishing Recommended Design Stresses for Round Timber Construction Poles, **04.09**
D 3201–86 Test Method for Hygroscopic Properties of Fire-Retardant Wood and Wood-Base Products, **04.09**
D 3202–83 Recommended Practice for Preparation of Bituminous Mixture Beam Specimens by Means of the California Kneading Compactor, **04.03**
D 3203–83 Test Method for Percent Air Voids in Compacted Dense and Open Bituminous Paving Mixtures, **04.03**
D 3204–86 Specification for Preformed Cellular Plastic Joint Fillers for Relieving Pressure, **04.03**
D 3205–86 Test Method for Viscosity of Asphalt with Cone and Plate Viscometer, **04.03**
D 3206–87 Test Method for Soil Resistance of Floor Polishes, **15.04**
D 3207–87 Test Method for Detergent Resistance of Floor Polish Films, **15.04**
D 3208–86 Specification for Manifold Papers for Permanent Records, **15.09**
D 3209–87 Test Method for Freeze/Thaw Resistance of Liquid Water Emulsion Floor Polishes, **15.04**
D 3210–73(1983) Method for Comparing Colors of Films from Water Emulsion Floor Polishes, **15.04**
D 3211–79 Test Method for Relative Density of Black Smoke (Ringelmann Method), **11.03**
D 3212–86 Specification for Joints for Drain and Sewer Plastic Pipes Using Flexible Elastomeric Seals, **08.04**
D 3213 Not yet assigned
D 3214–84 Method of Testing Coating Powders and Their Coatings Used for Electrical Insulation, **10.01**
D 3215–83 Method for Measurement of Specific Electrical Impedance of Electrical-Grade Magnesium Oxide for Use in Sheathed-Type Electric Heating Elements, **10.02**
D 3216–78 Test Method for Grading Cotton Card Webs for Appearance (Intent to Withdraw), **07.02**
D 3217–79 Test Method for Breaking Tenacity of Man-Made Textile Fibers in Loop or Knot Configurations, **07.02**
D 3218–87 Specification for Polyolefin Monofilaments, **07.02**
D 3219–79(1983) Specification for Industrial Filament Yarns, Tire Cords, and Tire Cord Fabrics Made from Man-Made Organic-Base Fibers, **07.01**
D 3220–81 Specification for Reinforced Polyterephthalate Thermoplastic Molding and Extrusion Materials, **08.03**
D 3221–81 Specification for Thermoplastic Polyterephthalate Molding and Extrusion Materials, **08.03**
D 3222–81 Specification for Poly(Vinylidene Fluoride) (PVDF) Molding and Extrusion Materials, **08.03**
D 3223–86 Test Method for Total Mercury in Water, **11.01**
D 3224–73(1984) Test Method for Water Solubility of Auxiliary Solvent for Wood Preserving Solutions, **04.09**
D 3225–73(1984) Specification for Low-Boiling Hydrocarbon Solvent for Oil-Borne Preservatives, **04.09**
D 3226 Discontinued
D 3227–83 Test Method for Mercaptan Sulfur in Gasoline, Kerosine, Aviation Turbine, and Distillate Fuels (Potentiometric Method), **05.02**
D 3228–83 Test Method for Total Nitrogen in Lubricating Oils and Fuel Oils by Modified Kjeldahl Method, **05.02**
D 3229–83 Test Method for Low Levels of Lead in Gasoline by X-Ray Spectrometry, **05.02**
D 3230–83 Test Method for Salts in Crude Oil (Electrometric Method), **05.02**
D 3231–83 Test Method for Phosphorus in Gasoline, **05.02**
D 3232–83 Method for Measurement of Flow Properties of Lubricating Greases at High Temperatures, **05.02**
D 3233–86 Method for Measurement of Extreme Pressure Properties of Fluid Lubricants (Falex Methods), **05.02**
D 3234–73(1983) Test Method for Abrasion Resistance of Wax Coatings, **05.02**
D 3235–73(1983) Test Method for Solvent Extractables in Petroleum Waxes, **05.02**
D 3236–73(1983) Test Method for Apparent Viscosity of Hot Melt Adhesives and Coating Materials, **05.02**
D 3237–79(1984) Test Method for Lead in Gasoline by Atomic Absorption Spectrometry, **05.02**
D 3238–85 Method for Calculation of Carbon Distribution and Structural Group Analysis of Petroleum Oils by Irhe n-d-M Method, **05.02**
D 3239–86 Method for Aromatic Types Analysis of Gas-Oil Aromatic Fractions by High Ionizing Voltage Mass Spectrometry, **05.02**
D 3240–86a Test Method for Undissolved Water in Aviation Turbine Fuels, **05.02**
D 3241–85 Test Method for Thermal Oxidation Stability of Aviation Turbine Fuels (JFTOT Procedure), **05.02**
D 3242–79a Test Method for Total Acidity in Aviation Turbine Fuel, **05.02**
D 3243 Discontinued—Replaced by D 3828
D 3244–77(1983) Practice for Utilization of Test Data to Determine Conformance with Specifications, **05.02**
D 3245–85 Test Method for Pumpability of Industrial Fuel Oils, **05.02**
D 3246–81 Test Method for Sulfur in Petroleum Gas by Oxidative Microcoulometry, **05.02**
D 3247–73(1984) Test Method for Coefficient of Static Friction of Corrugated and Solid Fiberboard (Horizontal Plane Method), **15.09**
D 3248–73(1984) Test Method for Coefficient of Static Friction of Corrugated and Solid Fiberboard (Inclined Plane Method), **15.09**
D 3249–79 Recommended Practice for General Ambient Air Analyzer Procedures, **11.03**
D 3250–77(1982) Test Method for Total Oxygen Demand in Water, **11.02**
D 3251–84 Test Method for Thermal-Aging Characteristics of Electrical Insulating Varnishes Applied Over Film-Insulated Magnet Wire, **10.01**
D 3252 Discontinued
D 3253–81 Specification for Vulcanized Rubber Sheeting for Pond, Canal, and Reservoir Lining, **04.04**

52 *Discontinued*
53-86a Methods for Chemical Analysis of Copper, **03.05**
54-80(1984) Method for Chemical Analysis of Special Brasses and Bronzes, **03.05**
55-48(1986) Practice for Sampling Wrought Nonferrous Metals and Alloys for Determination of Chemical Composition, **02.01,02.02,03.05**
56-83 Method for Chemical Analysis of Silver Brazing Alloys, **03.05**
57 *Discontinued*
58 *Discontinued—Combined with E 37*
59-78(1982) Method for Sampling Steel and Iron for Determination of Chemical Composition, **03.05**
60-87 Practice for the Photometric and Spectrophotometric Methods for Chemical Analysis of Metals, **03.05**
61 *Redesignated E 35*
62-76(1984) Methods for Chemical Analysis of Copper and Copper Alloys (Photometric Method), **03.05**
63 *Discontinued—Combined with E 75*
64 *Discontinued—Combined with E 40*
65 *Discontinued*
66 *Discontinued—Combined with A 146*
67 *Discontinued—Replaced by E 87*
68 *Discontinued*
69-80 Test Method for Combustible Properties of Treated Wood by the Fire-Tube Apparatus, **04.07**
70-77(1986) Test Method for pH of Aqueous Solutions with the Glass Electrode, **15.05**
71 *Discontinued—Replaced by E 446*
72-80 Method for Conducting Strength Tests of Panels for Building Construction, **04.07**
73-83 Method of Testing Truss Assemblies, **04.07**
74-83 Practice for Calibration of Force Measuring Instruments for Verifying the Load Indication of Testing Machines, **03.01**
75-76(1984) Method for Chemical Analysis of Copper-Nickel and Copper-Nickel-Zinc Alloys, **03.05**
76-83 Method for Chemical Analysis of Nickel-Copper Alloys, **03.05**
77-84 Methods of Verification and Calibration of Liquid-in-Glass Thermometers, **14.01**
78 *Discontinued—Combined with E 9*
79 *Discontinued—Replaced by E 112*
80 *Discontinued—Replaced by E 228*
81-77(1982) Method for Preparing Quantitative Pole Figures of Metals, **03.01**
82-63(1984) Method for Determining the Orientation of a Metal Crystal, **03.01**
83-85 Method of Verification and Classification of Extensometers, **03.01**
84-87 Test Method for Surface Burning Characteristics of Building Materials, **04.07**
85 *Discontinued—Replaced by E 139*
86 *Discontinued*
87 *Discontinued*
88-58(1986) Practice for Sampling Nonferrous Metals and Alloys in Cast Form for Determination of Chemical Composition, **02.01,02.02,03.05**
89 *Discontinued—Replaced by E 112*
90-87 Method for Laboratory Measurement of Airborne-Sound Transmission Loss of Building Partitions, **04.06**
91 *Discontinued—Replaced by E 112*
92-82(1987) Test Method for Vickers Hardness of Metallic Materials, **03.01**
93 *Discontinued—Replaced by E 140*
94-84a Guide for Radiographic Testing, **03.03**
95-68(1981) Specification for Cell-Type Oven with Controlled Rates of Ventilation, **14.02**
96-80 Test Methods for Water Vapor Transmission of Materials, **04.06,08.03,15.09**
97-82 Test Method for 45-deg, 0-deg Directional Reflectance Factor of Opaque Specimens by Broad-Band Filter Reflectometry, **06.01,14.02,15.09**
98 *Discontinued—Replaced by E 155*
99 *Discontinued—Replaced by E 390*
100-81(1986) Specification for ASTM Hydrometers, **05.03,14.01**
101-67(1983) Method for Spectrographic Analysis of Aluminum and Aluminum Alloys by the Point-to-Plane Technique, **03.06**
102-81 Test Method for Saybolt Furol Viscosity of Bituminous Materials at High Temperatures, **04.04**

E 103-84 Method for Rapid Indentation Hardness Testing of Metallic Materials, **02.02,03.01**
E 104-85 Recommended Practice for Maintaining Constant Relative Humidity by Means of Aqueous Solutions, **08.03,10.01,10.02,11.03**
E 105-58(1975) Recommended Practice for Probability Sampling of Materials, **04.03,07.01,14.02**
E 106-83 Method for Chemical Analysis of Copper-Beryllium Alloys, **03.05**
E 107-83 Method for Chemical Analysis of Electronic Nickel, **03.05**
E 108-83 Method for Fire Tests of Roof Coverings, **04.04,04.07**
E 109 Discontinued—Replaced by E 709
E 110-82(1987) Test Method for Indentation Hardness of Metallic Materials by Portable Hardness Testers, **03.01**
E 111-82 Test Method for Young's Modulus, Tangent Modulus, and Chord Modulus, **03.01**
E 112-85 Methods for Determining Average Grain Size, **02.01,03.01**
E 113 Discontinued
E 114-85 Practice for Ultrasonic Pulse-Echo Straight-Beam Testing by the Contact Method, **03.03**
E 115-71(1979) Recommended Practices for Photographic Processing in Spectrochemical Analysis, **03.06**
E 116-81(1986) Recommended Practice for Photographic Photometry in Spectrochemical Analysis, **03.06**
E 117-64(1985) Method for Spectrographic Analysis of Pig Lead by the Point-to-Plane Technique, **03.06**
E 118-83 Method for Chemical Analysis of Copper-Chromium Alloys, **03.05**
E 119-83 Method for Fire Tests of Building Construction and Materials, **04.07**
E 120-83 Method for Chemical Analysis of Titanium and Titanium Alloys, **03.05**
E 121-83 Method for Chemical Analysis of Copper-Tellurium Alloys, **03.05**
E 122-72(1979) Recommended Practice for Choice of Sample Size to Estimate the Average Quality of a Lot or Process, **14.02**
E 123-78(1984) Specification for Apparatus for Determination of Water by Distillation, **05.03,14.02**
E 124-61(1981) Specification for Weighing and Drying Apparatus for Microchemical Analysis, **14.02**
E 125-63(1985) Reference Photographs for Magnetic Particle Indications on Ferrous Castings, **03.03**
E 126-76(1982) Method for Inspection, Test, and Standardization of Hydrometers, **14.01**
E 127-82a Practice for Fabricating and Checking Aluminum Alloy Ultrasonic Standard Reference Blocks, **03.03**
E 128-61(1981) Test Method for Maximum Pore Diameter and Permeability of Rigid Porous Filters for Laboratory Use, **14.02**
E 129-74(1983) Method for Spectrographic Analysis of Thermionic Nickel Alloys by the Powder Techniques, **03.06,10.04**
E 130-81 Recommended Practice for Designation of Shapes and Sizes of Graphite Electrodes, **03.06**
E 131-84 Definitions of Terms and Symbols Relating to Molecular Spectroscopy, **14.01**
E 132-86 Test Method for Poisson's Ratio at Room Temperature, **03.01**
E 133-86 Specification for Distillation Equipment, **05.03,14.02**
E 134-68(1981) Specification for Pensky-Martens Closed Flash Tester, (Intent to Withdraw) **05.03,14.02**
E 135-86a Terminology Relating to Emission Spectroscopy, **03.06**
E 136-82 Test Method for Behavior of Materials in a Vertical Tube Furnace at 750°C, **04.07**
E 137-82 Recommended Practice for Evaluation of Mass Spectrometers for Quantitative Analysis from a Batch Inlet, **14.01**
E 138 Discontinued—Replaced by E 709
E 139-83 Recommended Practice for Conducting Creep, Creep-Rupture, and Stress-Rupture Tests of Metallic Materials, **03.01**
E 140-86 Hardness Conversion Tables for Metals (Relationship Between Brinell Hardness, Vickers Hardness, Rockwell Hardness, Rockwell Superficial Hardness, and Knoop Hardness), **02.01,03.01**
E 141-69(1975) Recommended Practice for Acceptance of Evidence Based on the Results of Probability Sampling, **14.02**
E 142-86 Method for Controlling Quality of Radiographic Testing, **03.03**
E 143-61(1979) Test Method for Shear Modulus at Room Temperature, **03.01**
E 144-64(1981) Recommended Practice for Safe Use of Oxygen Combustion Bombs, **14.02**
E 145-68(1981) Specification for Gravity-Convection and Forced-Ventilation Ovens, **14.02**
E 146-83 Method for Chemical Analysis of Zirconium and Zirconium Alloys, **03.05**
E 147-61(1986) Specification for Apparatus for Microdetermination of Nitrogen by Kjeldahl Method, **14.02**
E 148-66(1981) Specification for Apparatus for Microdetermination of Nitrogen by Dumas Method (Intent to Withdraw), **14.02**
E 149 Redesignated C 952
E 150 Discontinued
E 151 Discontinued
E 152-81a Methods for Fire Tests of Door Assemblies, **04.07**
E 153 Discontinued
E 154-68(1979) Methods of Testing Materials for Use as Vapor Barriers Under Concrete Slabs and as Ground Cover in Crawl Spaces, **04.07**
E 155-85 Reference Radiographs for Inspection of Aluminum and Magnesium Castings, **02.02,03.03**
E 156-83 Method for Determination of Phosphorus in High-Phosphorus Brazing Alloys (Photometric Method), **03.05**
E 157-82a Method of Assigning Crystallographic Phase Designations in Metallic Systems, **03.01**
E 158-86 Practice for Fundamental Calculations to Convert Intensities into Concentrations in Optical Emission Spectrochemical Analysis, **03.06**
E 159-86 Test Method for Hydrogen Loss of Copper, Tungsten, and Iron Powders, **02.05,03.05**
E 160-80 Test Method for Combustible Properties of Treated Wood by the Crib Test, **04.07**
E 161-87 Specification for Precision Electroformed Sieves (Square-Opening Series), **14.02**
E 162-83 Test Method for Surface Flammability of Materials Using a Radiant Heat Energy Source, **04.07**
E 163-84 Methods for Fire Tests of Window Assemblies, **04.07**
E 164-81 Practice for Ultrasonic Contact Examination of Weldments, **03.03**
E 165-80(1983) Practice for Liquid Penetrant Inspection Method, **03.03**
E 166 Discontinued—Replaced by E 167
E 167-77(1982) Recommended Practice for Goniophotometry of Objects and Materials, **14.02**
E 168-67(1977) Recommended Practices for General Techniques of Infrared Quantitative Analysis, **14.01**
E 169-87 Recommended Practices for General Techniques of Ultraviolet Quantitative Analysis, **14.01**
E 170-84b Terminology Relating to Radiation Measurements and Dosimetry, **12.02**
E 171-82 Specification for Standard Atmospheres for Conditioning and Testing Materials, **08.03,15.09**
E 172-85 Recommended Practice for Describing and Specifying the Excitation Source in Emission Spectrochemical Analysis, **03.06**
E 173-80 Recommended Practices for Conducting Interlaboratory Studies of Methods for Chemical Analysis of Metals, **03.05**
E 174 Discontinued
E 175-82 Definitions of Terms Relating to Microscopy, **14.01**
E 176-86 Terminology Relating to Fire Standards, **04.07**
E 177-86 Practice for Use of the Terms Precision and Bias in ASTM Test Methods, **04.01,14.02**
E 178-80 Recommended Practice for Dealing with Outlying Observations, **14.02**
E 179-81 Recommended Practice for Selection of Geometric Conditions for Measurement of Reflectance and Transmittance, **14.02**
E 180-85 Practice for Determining the Precision Data of ASTM Methods for Analysis and Testing of Industrial Chemicals, **06.03,15.05**
E 181-82 Method for Detector Calibration and Analysis of Radionuclides, **12.02**
E 182 Discontinued
E 183 Discontinued
E 184-79 Practice for Effects of High-Energy Neutron Radiation on the Mechanical Properties of Metallic Materials, **03.01,12.02**
E 185-82 Practice for Conducting Surveillance Tests for Light Water-Cooled Nuclear Power Reactor Vessels, **03.01,12.02**
E 186-84 Reference Radiographs for Heavy-Walled (2 to 4½-in. (51 to 114-mm)) Steel Castings, **01.02,03.03**
E 187 Redesignated G 24
E 188 Discontinued—Replaced by G 23
E 189-63(1975) Recommended Practice for Determining Temperature-Electrical Resistance Characteristics (EMF) of Metallic Materials, (Intent to Withdraw) **14.02**
E 190-80(1985) Method for Guided Bend Test for Ductility of Welds, **03.01**

F 951–87 Test Method for Determination of Radial Interstitial Oxygen Variation, **10.05**
F 952–85 Specification for Mixing Machines, Food Electric, **15.07**
F 953–85 Specification for Commercial Dishwashing Machines (Stationary Rack, Dump Type) Chemical Sanitizing, **15.07**
F 954 Not yet assigned
F 955–85 Test Method for Evaluating Heat Transfer Through Materials for Protective Clothing Upon Contact with Molten Substances, **15.07**
F 956–86 Specification for Bell, Ship's, **01.02**
F 957–86 Specification for Gongs, Sound Signaling, **01.02**
F 958–85 Practice for Developing Guides for Using Consumer Products, **15.07**
F 959–85 Specification for Compressible-Washer-Type Direct Tension Indicator for Use With Structural Fasteners, **15.08**
F 960–86 Specification for Medical and Surgical Suction and Drainage Systems, **13.01**
F 961–85 Specification for Cobalt-Nickel-Chromium-Molybdenum Alloy Forgings for Surgical Implant Applications, **13.01**
F 962–86 Specification for Oil Spill Response Boom Connection, **11.04**
F 963–86 Consumer Safety Specifications for Toy Safety, **15.07**
F 964 Not yet assigned
F 965–85 Specification for Rigid Laryngoscopes for Tracheal Intubation, **13.01**
F 966–85 Consumer Safety Specification for Full-Size and Non-Full Size Baby Crib Corner Post Extensions, **15.07**
F 967–87 Practice for Security Engineering Symbols, **15.07**
F 968–85 Specification for Electrically Insulating Plastic Guard Equipment for Protection of Workers, **13.01**
F 969–86 Practice for Construction of Chain-Link Tennis Court Fence, **01.06**
F 970–87 Test Method for Static Load Limit, **15.04**
F 971–86 Guide for Ecological Considerations for the Use of Chemical Dispersants in Oil Spill Response Mangroves, **11.04**
F 972–86 Guide for Ecological Considerations for the Use of Chemical Dispersants in Oil Spill Response Nearshore Subtidal, **11.04**
F 973–86 Guide for Ecological Considerations for the Use of Chemical Dispersants in Oil Spill Response Tidal Flats, **11.04**
F 974–86 Practice for the Determination of the Color Response of an Electrostatic Copying System, Black and White Output, **15.09**
F 975–86 Specification for Auxiliary Single Stage Steam Turbines for Shipboard Use, **01.02**
F 976–86 Specification for Portable Kerosine Containers for Consumer Use, **15.07**
F 977–86 Safety Performance Specification for Infant Walkers, **15.07**
F 978–86 Test Method for Characterizing Semiconductor Deep Levels by Transient Capacitance Techniques, **10.05**
F 979–86 Test method for Hermeticity of Hybrid Microcircuit Packages Prior to Lidding, **10.05**
F 980–86 Guide for Measurement of Rapid Annealing of Neutron-Induced Displacement Damage in Semi-Conductor Devices, **10.04**
F 981–86 Practice for Assessment of Compatibility of Bio-Materials (Non-Porous) for Surgical Implants with Respect to Effect of Materials in Muscle and Bone, **13.01**
F 982–86 Specification for Disclosures of Characteristics of Surgically Implanted Clamps for Carotid Occlusion, **13.01**
F 983–86 Practice for Permanent Marking for Orthopedic Implant Components, **13.01**
F 984–86 Specification for Cutaneous Gas Monitoring Devices for Oxygen and Carbon Dioxide, **13.01**
F 985–86 Specification for Panama Canal Pilot Platform, **01.02**
F 986–86 Specification for Suction Strainer Boxes, **01.02**
F 987–86 Specification for Portable Flush Deck Stanchion, **01.02**
F 988–86 Guide for Specifying Carbon-Fiber Randomly Reinforced Ultra-High-Molecular-Weight Polyethylene for Medical Devices, **13.01**
F 989–86 Methods for Testing Spill Control Barrier Tension Members, **11.04**
F 990–86 Guides for Ecological Considerations for Use of Chemical Dispersants in Oil Spill Response—Sandy Beaches, **11.04**
F 991–86 Specification for Docking/Drain Plug and Boss Assemblies, **01.02**
F 992–86 Specification for Valve Label Plates, **01.02**
F 993–86 Specification for Valve Locking Devices, **01.02**
F 994–86 Practice for Design and Installation of Over-Board Discharge Hull Penetration Connections, **01.02**
F 995–86 Practice for Estimating Toner usage in Copiers Utilizing Dry Two Component Developers, **15.09**

F 996 Not yet assigned
F 997–86 Methods for Screening Polycarbonate Resin for Medical Applications, **13.01**
F 998–86 Specification for Centrifugal Pump, Shipboard Use, **01.02**
F 999–86 Guide for Ecological Considerations for the Use of Chemical Dispersants in Oil Spill Response—Gravel or Cobble Beaches, **11.04**
F1000–86 Practice for Symbols—Mechanical Piping, **01.02**
F1001–86 Guide for Selection of Test Chemicals to Evaluate Protective Clothing Materials, **15.07**
F1002–86 Specification for Expanded-Metal Bulkhead Panels, **01.02**
F1003–86 Specification for Searchlights on Motor Lifeboats, **01.02**
F1004–86 Consumer Safety Specification of First-Generation Standard Expansion Gates and Expandable Enclosures, **15.07**
F1005–86 Practice for HVAC Duct Shapes; Identification and Description of Design Configuration, **01.02**
F1006–86 Specification for Entrainment Separators for Use in Marine Piping Applications, **01.02**
F1007–86 Specification for Pipe Line Expansion Joints of the Packed Slip Type for Marine Application, **01.02**
F1008–86 Guide for Ecological Considerations for the Use of Chemical Dispersants in Oil Spill Response—Salt Marshes, **11.04**
F1009–86 Guide for Ecological Considerations for the Use of Chemical Dispersants in Oil Spill Response—Offshore, **11.04**
F1010–86 Guide for Ecological Considerations for the Use of Dispersants in Oil Spill Response—Bird Habitats, **11.04**
F1011–86 Guide for Developing a Hazardous Materials Training Curriculum for Initial Response Personnel, **11.04**
F1012–86 Guide for Ecological Consideration for the Use of Chemical Dispersants in Oil Spill Response—the Arctic, **11.04**
F1013–86 Practice for Determining the Performance of a Liquid/Liquid Separator System Employing a Single-Pas, Constant-Rate, Non-Solids Test, **14.02**
F1014–86 Specification for Flashlights in Vessels, **01.02**
F1015–86 Test Method for Relative Abrasiveness of Synthetic Turf Playing Surfaces, **15.07**
F 1016–86 Practice for Tire Treadwear Data Analysis, **09.02**
F1017–86 Method for Testing Lateral Toe Release of Adult Alpine Ski Bindings Under Impact Loading, **15.07**
F1018–86 Specification for Emergency Gear Stowage Locker, **01.02**
F1019–86 Specification for Deck Gear Stowage Box, **01.02**
F1020–86 Specification for Line Blind Valves for Marine Applications, **01.02**
F1021–86 Specification for Feeders, Detergent, Rinse Agent, and Sanitizing Agent for Commercial Dishwashing and Glasswashing Machines, **15.07**
F1022–86 Specification for Chemical Sanitizing Commercial Dishwashing Machines, Recirculated Wash, Fresh Water Rinse Type, **15.07**
F1023–86 Specification for Dispenser, Powdered Ice Tea, **15.07**

F1024–86 Specification for Dispenser, Rehydrated Mashed Potato, **15.07**
F1025–86 Guide for Selection and Use of Full Encirclement-Type Band Clamps for Reinforcement or Repair of Punctures or Holes in Polyethylene Gas Pressure Pipe, **08.04**
F1026–86 Specification for General Workmanship and Performance Measurements of Hemostatic Forceps, **13.01**
F1027–86 Practice for Assessment of Tissue and Cell Compatibility of Orofacial Prosthetic Materials and Devices, **13.01**
F1028–86 Specification for Tri-Fin Nails, **13.01**
F1029–86 Guide for Selection of Physical Security Measures for a Facility, **15.07**
F1030–86 Practice for Selection of Valve Operators, **01.02**
F1031–86 Practice for Training the Emergency Medical Technician (Basic), **13.01**
F1032–86 Guide for Measuring Time-Dependant Total-Dose Effects in Semiconductor Devices Exposed to Pulsed Ionizing Radiation, **10.04**
F1033–86 Practice for Comparing Lift-Off Correction Media, **15.09**
F1034–86 Guide for Classifying Industrial Robots, **14.01**
F1035–86 Practice for Use of Rubber-Cord Pie Disk to Demonstrate the Discernment Capability of a Tire X-Ray Imaging System, **09.02**
F1036 Not yet assigned
F1037–87 Test Method for Visual Rating of Resilient Floors and After In-Service Exposure to Foot Traffic, **15.04**
F1038–87 Test Method for Motor Life Evaluation of a Household Canister Vacuum Cleaner, **15.07**
F1039–87 Test Method for the Measurement of Low-Level X-Radiation Used in X-Ray Security Screening Systems, **15.07**
F1040–87 Specification for Fitter Units, Air Conditioning: Viscous-Impingement and Dry Types, Replaceable, **14.02**
F1041 Not yet assigned
F1042 Not yet assigned
F1043 Not yet assigned
F1044–87 Test Method for Shear Testing of Porous Metal Coatings, **13.01**
F1045 Not yet assigned
F1046 Not yet assigned
F1047 Not yet assigned
F1048–87 Test Method for Measuring the Effective Surface Roughness of Optical Components by Total Integrated Scattering, **10.04**
F1049–87 Test Method for Shallow Etch Pit Detection on Silicon Wafers, **10.05**
F1050 Not yet assigned
F1051 Not yet assigned
F1052 Not yet assigned
F1053 Not yet assigned
F1054 Not yet assigned
F1055 Not yet assigned
F1056 Not yet assigned
F1057 Not yet assigned
F1058 Not yet assigned
F1059–87 Practice for Calculating the Contrast and Threshold Sensitivity of a Positive Photoresist, **10.05**

EXHIBIT 16

1988 ANNUAL BOOK OF ASTM STANDARDS

SECTION 00

Index

VOLUME 00.01 Subject Index; Alphanumeric List

Revision issued annually



TA 401
.A653
V.00.01
1988

Editorial Staff

Managing Standards Editor:
Roberta A. Storer
Associate Standards Editor:
Joan L. Cornillot
Senior Assistant Editor:
Deborah Richardson
Assistant Editors:
Kenneth W. O'Brien
Andrea L. Stanton
Leigh Anne Loux
Robin E. Craig
Christine S. Fanelle
Paula C. Fazio
Marifa S. Winfree
Elizabeth L. Gutman
Susan P. Milligan
Patricia A. McGee
Carolyn J. Wise
Editorial Assistant:
Catherine T. Hsia
Senior Indexer:
Harris J. Shupak

Vice-President, Publications and Marketing:
Robert L. Meltzer

Library of Congress Catalog Card Number: 83-641658

ISBN 0-8031-1163-0 (set)
ISBN 0-8031-1162-2 (volume)

ISSN 0192-2998

Copyright © by AMERICAN SOCIETY FOR TESTING AND MATERIALS 1988

Printed in Easton, MD, U.S.A.

Foreword

ASTM

ASTM, founded in 1898, is a scientific and technical organization formed for "the development of standards on characteristics and performance of materials, products, systems, and services; and the promotion of related knowledge." It is the world's largest source of voluntary consensus standards.

The Society operates through 140 main technical committees with 2040 subcommittees. These committees function in prescribed fields under regulations that ensure balanced representation among producers, users, general interest, and consumer participants.

The Society currently has 30,000 active members, of whom approximately 19,150 serve as technical experts on committees, representing 91,390 units of participation.

Membership in the Society is open to all concerned with the fields in which ASTM is active. A membership application may be found at the back of this volume. Additional information may be obtained from Member, Committee, and Customer Services, ASTM, 1916 Race St., Philadelphia, PA 19103.

1988 Annual Book of ASTM Standards

The 1988 *Annual Book of ASTM Standards* consists of 67 volumes, divided among 16 sections, of which this volume is one. It contains formally approved ASTM standard classifications, guides, practices, specifications, test methods, and terminology and related material such as proposals. These terms are defined as follows in the Regulations Governing ASTM Technical Committees:

Categories:

standard—as used in ASTM, a document that has been developed and established within the consensus principles of the Society and that meets the approval requirements of ASTM procedures and regulations.

Discussion—The term "standard" serves in ASTM as an adjective in the title of documents, such as test methods or specifications, to connote specified consensus and approval. The various types of standard documents are based on the needs and usages as prescribed by the technical committees of the Society.

proposal—a document that has been approved by the sponsoring committee for publication for information and comment prior to its consideration for adoption as a standard.

Discussion—Complete balloting procedures are not required for proposals.

emergency standard—a document published by the Society to meet a demand for more rapid issuance of a specific standard document.

Discussion—The Executive Subcommittee of the sponsoring committee must recommend the publishing of an emergency standard and the Committee on Standards must concur in the recommendation. Emergency standards are not full consensus documents because they are not submitted to Society ballot.

Types:

The various types of ASTM documents are to provide a flexibility of form, communication, and usage for both the technical committees and the myriad users of ASTM documents. The type of ASTM document that is developed and titled is based on the technical content and intended use, not on the degree of consensus achieved. The three categories of ASTM documents (standard, emergency standard, and proposal) can be of the following forms and types:

classification—a systematic arrangement or division of materials, products, systems, or services into groups based on similar characteristics such as origin, composition, properties, or use.

guide—a series of options or instructions that do not recommend a specific course of action.

Discussion—Whereas a practice prescribes a general usage principle, a guide only suggests an approach. The purpose of a guide is to offer guidance, based on a consensus of viewpoints, but not to establish a fixed procedure. A guide is intended to increase the awareness of the user to available techniques in a given subject area and to provide information from which subsequent evaluation and standardization can be derived.

practice—a definitive procedure for performing one or more specific operations or functions that does not produce a test result. (Compare *test method.*)

Discussion—A practice is not a downgraded test method. Examples of practices include procedures for conducting interlaboratory testing programs or other statistical procedures; for writing statements on sampling or precision and accuracy; and for selection, preparation, application, inspection, necessary precautions for use or disposal, installation, maintenance, and operation of testing equipment.

specification—a precise statement of a set of requirements to be satisfied by a material, product, system, or service that indicates the procedures for determining whether each of the requirements is satisfied.

Discussion—It is desirable to express the requirements numerically in terms of appropriate units together with their limits.

terminology—a document comprising definitions of terms; descriptions of terms; explanations of symbols, abbreviations, or acronyms.

test method—a definitive procedure for the identification, measurement, and evaluation of one or more qualities, characteristics, or properties of a material, product, system, or service that produces a test result. (Compare *practice.*)

A new edition of the Book of Standards is issued annually. Each volume contains all actions approved by the Society at least six months before the issue date. New and revised standards approved by the Society between the annual appearances of any given volume are made available as separate copies. The 1988 edition of the Book of Standards comprises approximately 55,000 pages and includes over 8000 ASTM standards.

Purpose and Use of ASTM Standards

An ASTM standard represents a common viewpoint of those parties concerned with its provisions, namely, producers, users, consumers, and general interest groups. It is intended to aid industry, government agencies, and the general public. The use of an ASTM standard is purely voluntary. It is recognized that, for certain work or in certain regions, ASTM standard specifications may be either more or less restrictive than needed. The existence of an ASTM standard does not preclude anyone from manufacturing, marketing, or purchasing products, or using products, processes, or procedures not conforming to the standard. Because ASTM standards are subject to periodic review and revision, those who use them are cautioned to obtain the latest revision.

Consideration of Comments on ASTM Standards

An ASTM standard is subject to revision at any time by the responsible technical committee and must be reviewed every five years and if not revised, either reapproved or withdrawn. Your comments are invited either for revision of any standard or for additional standards and should be addressed to ASTM Headquarters. Your comments will receive careful consideration at a meeting of the responsible technical committee, which you may attend. If you feel that your comments have not received a fair hearing you should make your views known to the ASTM Committee on Standards, 1916 Race St., Philadelphia, PA 19103.

Using the Annual Book of ASTM Standards

The standards are assembled in each volume in alphanumeric sequence of their ASTM designation numbers except for Volumes 11.01, 11.02, and 05.04, which are assembled by subject matter. Volume 06.03 is assembled first by committee, then in alphanumeric sequence. Each volume has a table of contents, listing the standards in alphanumeric sequence by ASTM designation; and a list by subjects, categorizing the standards according to subject. A subject index of the standards in each volume appears at the back of each volume.

Availability of Individual Standards

Each ASTM standard is available as a separate copy from ASTM. Special quantity prices and discounts for members can be obtained from Customer Services. When ordering, provide the ASTM standard designation and year of issue, title, quantity desired, and shipping instructions.

Obsolete Editions

This new edition of the *Annual Book of ASTM Standards* makes last year's edition obsolete. Each volume of the *Annual Book of ASTM Standards* is published annually because of additions of new standards and significant revisions in existing standards. On the average, about 30 % of each volume is new or revised. For practical purposes, therefore, it is not wise to use obsolete volumes. However, for teaching purposes, these outdated volumes might be useful.

Precautionary Caveat

In January 1983, the Board of Directors approved the inclusion of the following precautionary caveat:

This standard may involve hazardous materials, operations, and equipment. This standard does not purport to address all of the safety problems associated with its use. It is the responsibility of the user of this standard to establish appropriate safety and health practices and determine the applicability of regulatory limitations prior to use.

Inclusion of the caveat is required in test methods, specifications (where test methods are detailed other than by reference), practices, and guides. Implementation of the caveat will be phased in as new, revised, and reapproved standards are approved by the Society.

Disclaimer

The American Society for Testing and Materials takes no position respecting the validity of any patent rights asserted in connection with any item mentioned in these standards. Users of these standards are expressly advised that determination of the validity of any such patent rights, and the risk of infringement of such rights, are entirely their own responsibility.

Alphanumeric List

ASTM Standards

Standards:

Specifications	2521
Test Methods	5190
Definitions	170
Total	7881

Each ASTM Standard has a unique serial designation. It is comprised of a capital letter indicating general classification (A, ferrous metals; B, nonferrous metals; C, cementitious, ceramic, concrete, and masonry materials; D, miscellaneous materials; E, miscellaneous subjects; F, materials for specific applications; G, corrosion, deterioration, and degradation of materials; ES, emergency standards; P, proposals), a serial number (one to four digits), a dash, and the year of issue. The number following the dash indicates the year of original adoption as standard or, in the case of revision, the year of last revision. Thus, standards adopted or revised during the year 1988 have as their final number, 88. A letter following this number indicates more than one revision during that year, that is 88a indicates the second revision in 1988, 88b the third revision, etc. Standards that have been reapproved without change are indicated by the year of last reapproval in parentheses as part of the designation number, for example, (1988).

A letter M after the serial number designates a "metric standard," that is, a standard which contains "hard metric" units.

When reference is made to a standard, the *complete* designation should be given. Best practice is to state the *designation and title.*

The boldface number(s) following the title refer to the volume(s) of the *Annual Book of ASTM Standards* in which the standard appears.

This index includes only those standards which appear in the 1988 edition of each volume of the *Annual Book of ASTM Standards*. New and revised standards that were approved after the closing date for the volume are available as separate reprints and will be listed in next year's index.

Materials for Use with Liquids in Solar Heating and Cooling Systems, **12.02**
E 713-88 Guide for the Selection of Scales for Metric Building Drawings, **04.07**
E 714-86 Specification for Disposable Glass Serological Pipets, **14.02**
E 715-80(1987) Specification for Gravity-Convection and Forced-Circulation Water Baths, **14.02**
E 716-85 Practices for Sampling of Aluminum and Its Alloys for Spectrochemical Analysis, **02.02,03.06,10.02**
E 717-84 Guide for Preparation of the Accreditation Annex of Acoustical Test Standards, **04.06**
E 718-80(1985) Method for Spectrographic Analysis of Cartridge Brass, **03.06**
E 719 Discontinued
E 720-86 Guide for Selection of a Set of Neutron-Activation Foils for Determining Neutron Spectra Used in Radiation-Hardness Testing of Electronics, **12.02**
E 721-85 Method for Determining Neutron Energy Spectra with Neutron-Activation Foils for Radiation Hardness Testing of Electronics, **12.02**
E 722-85 Practice for Characterizing Neutron Energy Fluence Spectra in Terms of an Equivalent Monoenergetic Neutron Fluence for Radiation-Hardness Testing of Electronics, **12.02**
E 723-85 Test Method for Efficacy of Antimicrobials as Preservatives for Aqueous-Based Products Used in the Paper Industry (Bacterial Spoilage), **11.04**
E 724-80 Practice for Conducting Static Basic Acute Toxicity Tests with Larvae of Four Species of Bivalve Molluscs, **11.04**
E 725-86 Test Method for Sampling Granular Carriers and Granular Pesticides, **11.04**
E 726-86 Test Method for Particle Size Distribution of Granular Carriers or Granular Pesticides, **11.04**
E 727-86 Test Methods for Determining Bulk Density of Granular Carriers and Granular Pesticides, **11.04**
E 728-86 Test Method for Resistance to Attrition of Granular Carriers and Granular Pesticides, **11.04**
E 729-88 Practice for Conducting Acute Toxicity Tests with Fishes, Macroinvertebrates, and Amphibians, **11.04**
E 730-85 Guide for Developing Functional Designs for Computerized Systems, **14.01**
E 731-85 Guide for Procurement of Commercially Available Computerized Systems, **14.01**
E 732-80(1986) Specification for Disposable Pasteur-Type Pipet, **14.02**
E 733-80(1986) Specification for 44.7-μL Disposable Glass Micropipets, **14.02**
E 734-80 Specification for Disposable Glass Blood Sample Capillary Tube (Microhematocrit), **14.02**
E 735-80 Specification for Minimum Performance Standards for Hand-Held Pipettors with Pipet Tips (Intent to Withdraw), **14.02**
E 736-86 Test Method for Cohesion/Adhesion of Sprayed Fire-Resistive Materials Applied to Structural Members, **04.07**
E 737-84 Practice for Installation of Storm Windows, Replacement Windows, Multi-Glazing, Storm Doors, and Replacement Doors, **08.04**
E 738-80(1985) Test Method for Aluminum in Iron Ores by Complexometric Titration, **03.05**
E 739-80(1986) Practice for Statistical Analysis of Linear or Linearized Stress-Life (S-N) and Strain-Life (ε-N) Fatigue Data, **03.01**
E 740-80(1986) Practice for Fracture Testing with Surface-Crack Tension Specimens, **03.01**
E 741-83 Test Method for Determining Air Leakage Rate by Tracer Dilution, **04.07**
E 742 Discontinued—Replaced by E 1150
E 743-80(1985) Guide for Spectrochemical Laboratory Quality Assurance, **03.06**
E 744-85 Practice for Evaluating Solar Absorptive Materials for Thermal Applications, **12.02**
E 745-80(1988) Practice for Simulated Service Testing for Corrosion of Metallic Containment Materials for Use with Heat Transfer Fluids in Solar Heating and Cooling Systems, **12.02**
E 746-87 Method for Determining Relative Image Quality Response of Industrial Radiographic Film, **03.03**
E 747-87 Test Method for Controlling Quality of Radiographic Testing Using Wire Penetrameters, **03.03**
E 748-87 Practices for Thermal Neutron Radiography of Materials, **03.03**
E 749-80(1985) Practice for Acoustic Emission Monitoring During Continuous Welding, **03.03**
E 750-80 Practice for Measuring Operating Characteristics of Acoustic Emission Instrumentation, **03.03**
E 751-80(1985) Practice for Acoustic Emission Monitoring During Resistance Spot Welding, **03.03**
E 752-81 Practice for Safety and Health Requirements Relating to Occupational Exposure to Carbon Disulfide, **11.03**
E 753-80(1985) Specification for Municipal Aluminum Scrap (MAS), **11.04**
E 754-80(1985) Test Method for Pullout Resistance of Tires and Anchors Embedded in Masonry Mortar Joints, **04.07**
E 755-80(1985) Method for Assay of Dicumyl Peroxide by Liquid Chromatography, **15.05**
E 756-83 Method for Measuring Vibration-Damping Properties of Materials, **04.06**
E 757-80 Test Method for Efficacy of Canine Reproduction Inhibitors, **11.04**
E 758-86 Test Method for Mammalian Acute Percutaneous Toxicity, **11.04**
E 759-86 Test Method for Effect of Deflection of Sprayed Fire-Resistive Material Applied to Structural Members, **04.07**
E 760-86 Test Method for Effect of Impact on Bonding of Sprayed Fire-Resistive Material Applied to Structural Members, **04.07**
E 761-86 Test Method for Compressive Strength of Sprayed Fire-Resistive Material Applied to Structural Members, **04.07**
E 762 Not yet assigned
E 763-85 Method for Calculation of Absorbed Dose from Neutron Irradiation by Application of Threshold-Foil Measurement Data, **12.02**
E 764-80(1984) Practice for Identifying Test Methods for Breeder Reactor Core Materials, **12.02**
E 765-80 Practice for Evaluation of Cover Materials for Flat Plate Solar Collectors, **12.02**
E 766-86 Practice for Calibrating the Magnification of SEM Using NBS SRM-484, **03.01**
E 767-80(1985) Test Method for Shear Resistance of Steel Truss Plates, **04.07**
E 768-80(1985) Practice for Preparing and Evaluating Specimens for Automatic Inclusion Assessment of Steel, **03.01**
E 769-85 Test Methods for Odor of Methanol, Ethanol, n-Propanol, and Isopropanol, **15.07**
E 770-80(1985) Method for Classifying Pavement Surface Textures, **04.03**
E 771-87 Test Method for Spontaneous Heating Tendency of Materials, **14.02**
E 772-87 Terminology Relating to Solar Energy Conversion, **12.02**
E 773-88 Test Method for Seal Durability of Sealed Insulating Glass Units, **04.07**
E 774-84a Specification for Sealed Insulating Glass Units, **04.07**
E 775-87 Test Methods for Total Sulfur in the Analysis Sample of Refuse-Derived Fuel, **11.04**
E 776-87 Test Method for Forms of Chlorine in Refuse-Derived Fuel, **11.04**
E 777-87 Test Method for Carbon and Hydrogen in the Analysis Sample of Refuse-Derived Fuel, **11.04**
E 778-87 Test Method for Nitrogen in the Analysis Sample of Refuse-Derived Fuel, **11.04**
E 779-87 Method for Determining Air Leakage Rate by Fan Pressurization Test, **04.07**
E 780-86 Method for Measuring the Insulation Resistance of Sheathed Thermocouple Material at Room Temperature, **14.03**
E 781-86 Practice for Evaluating Absorptive Solar Receiver Materials When Exposed to Conditions Simulating Stagnation in Solar Collectors with Cover Plates, **12.02**
E 782-86 Practice for Exposure of Cover Materials for Solar Collectors to Natural Weathering Under Conditions Simulating Operational Mode, **12.02**
E 783-84 Method for Field Measurement of Air Leakage Through Installed Exterior Windows and Doors, **04.07**
E 784-82 Specification for Clamps, Utility, Laboratory, and Holders, Buret and Clamp, **14.02**
E 785-81(1987) Specification for Crucibles, Ignition, Laboratory Metal, **14.02**
E 786-81(1987) Specification for Dishes, Evaporating, Platinum, **14.02**
E 787-81(1986) Specification for Disposable Glass Micro Blood Collection Pipets, **14.02**
E 788-83 Specification for Pipet, Blood Diluting, **14.02**
E 789-86 Test Method for Pressure and Rate of Pressure Rise for Dust Explosions in a Closed Vessel, **14.02**
E 790-87 Test Method for Residual Moisture in Refuse-Derived Fuel Analysis Sample, **11.04**
E 791-87 Method for Calculating Refuse-Derived Fuel Analysis Data from As-Determined to Different Bases, **11.04**
E 792-87 Guide for Computer Automation in the Clinical Laboratory, **14.01**
E 793-85 Test Method for Heats of Fusion and Crystallization by Differential Scanning Calorimetry, **14.02**
E 794-85 Test Method for Melting Temperatures and Crystallization Temperatures by Thermal Analysis, **14.02**
E 795-83 Practices for Mounting Test Specimens During Sound Absorption Tests, **04.06**
E 796-86a Method for Ductility Testing of Metallic Foil, **03.01**
E 797-87 Practice for Measuring Thickness by Manual Ultrasonic Pulse-Echo Contact Method, **03.03**
E 798-81 Practice for Conducting Irradiations at Accelerator-Based Neutron Sources, **12.02**
E 799-87 Practice for Determining Data Criteria and Processing for Liquid Drop Size Analysis, **14.02**
E 800-88 Guide for Measurement of Gases Present or Generated During Fires, **04.07**
E 801-85 Practice for Controlling Quality of Radiographic Testing of Electronic Devies, **03.03**
E 802-82(1988) Reference Radiographs for Gray Iron Castings Up to 4½ in. (114 mm) in Thickness, **03.03**
E 803-86 Method for Determining the L/D Ratio of Neutron Radiography Beams, **03.03**
E 804-81(1986) Practice for Calibration of the Ultrasonic Test System by Extrapolation Between Flat Bottom Hole Sizes, **03.03**
E 805-81(1987) Practice for Identification of Instrumental Methods of Color or Color-Difference, Measurement of Materials, **14.02**

E 806–86 Test Method for Carbon Tetrachloride and Chloroform in Liquid Chlorine by Direct Injection (Gas Chromatographic Procedure), **15.05**
E 807–81(1986) Practice for Metallographic Laboratory Evaluation, **03.01**
E 808–81 Practice for Describing Retroreflection, **14.02**
E 809–81 Practice for Measuring Photometric Characteristics of Retroreflectors, **14.02**
E 810–81 Test Method for Coefficient of Retroreflection or Retroreflective Sheeting, **14.02**
E 811–81(1987) Practice for Measuring Colorimetric Characteristics of Retroreflectors Under Nighttime Conditions, **14.02**
E 812–81(1986) Test Method for Crack Strength of Slow Bend, Precracked Charpy Specimens of High-Strength Metallic Materials, **03.01**
E 813–87 Test Method for J_{1c}, a Measure of Fracture Toughness, **03.01**
E 814–83 Methods for Fire Tests of Through-Penetration Fire Stops, **04.07**
E 815–81(1985) Test Method for Calcium Fluoride in Flourspar by Complexometric Titration, **03.05**
E 816–81 Method for Calibration of Secondary Reference Pyrheliometers and Pyrheliometers for Field Use, **12.02**
E 817 Not yet assigned
E 818 Not yet assigned
E 819–81(1986) Test Method for Trace Amounts of Arsenic in Organic Industrial Chemicals, **15.05**
E 820–81 Practice for Determining Absolute Absorbed Dose Rates for Electron Beams (Intent to Withdraw), **12.02**
E 821–81 Practice for Measurement of Mechanical Properties During Charged-Particle Irradiation, **12.02**
E 822–81(1987) Practice for Determining Resistance of Solar Collector Covers to Hail Impact with Propelled Ice Balls, **12.02**
E 823–81(1985) Practice for Nonoperational Exposure and Inspection of a Solar Collector, **12.02**
E 824–81 Method for Transfer of Calibration from Reference to Field Pyranometers, **12.02**
E 825–87 Specification for Phase-Change-Type Disposal Fever Thermometer for Intermittent Determination of Human Temperature, **14.03**
E 826–85 Practice for Testing Homogeneity of Materials for the Development of Reference Materials, **03.06**
E 827–88 Practice for Elemental Identification by Auger Electron Spectroscopy, **03.06**
E 828–81(1987) Method for Designating the Size of RDF-3 from Its Sieve Analysis, **11.04**
E 829–81 Method for Preparing RDF-3 Laboratory Samples for Analysis, **11.04**
E 830–87 Test Method for Ash in the Analysis Samples of Refuse-Derived Fuel (RDF-3), **11.04**
E 831–86 Test Method for Linear Thermal Expansion of Solid Materials by Thermomechanical Analysis, **08.03,14.02**
E 832–81 Specification for Laboratory Filter Papers (Redesignation, formerly D 1100), **14.02,15.09**
E 833–85a Definitions of Terms Relating to Building Economics, **04.07**
E 834–81(1987) Practice for Determination of Vacuum Chamber Gaseous Environment Using a Cold Finger, **15.03**
E 835/E835M–81 Guide for Dimensional Coordination of Structural Clay Units, Concrete Masonry Units, and Clay Flue Lining, **04.07**
E 836 Not yet assigned
E 837–85 Method for Determining Residual Stresses by the Hole-Drilling Strain-Gage Methods, **03.01**
E 838–81 Practice for Performing Accelerated Outdoor Weathering Using Concentrated Natural Sunlight, **12.02**
E 839–87 Method of Testing Sheathed Thermocouples and Sheathed Thermocouple Material, **14.03**
E 840–81 Practice for Using Flame Photometric Detectors in Gas Chromatography, **14.01**
E 841–81(1985) Test Method for Copper in Iron Ores by Atomic Absorption Spectroscopy, **03.05**
E 842–82 Specification for Lawn Buildings, **04.07**
E 843–82 Specification for Patio Cover, Carports, and Canopies, **04.07**
E 844–86 Guide for Sensor Set Design and Irradiation for Reactor Surveillance, **12.02**
E 845–81 Method for Calibration of Dosimeters Against an Adiabatic Calorimeter for Use in Flash X-Ray Fields (Intent to Withdraw), **12.02**
E 846–81 Matrix for Light-Water Reactor Spent Fuel Transportation, **12.02**
E 847 Not yet assigned
E 848–85 Practice for Safety and Health Requirements Relating to Occupational Exposure to Water-Insoluble Chromates, **11.03**
E 849–82 Practice for Safety and Health Requirements Relating to Occupational Exposure to Asbestos, **11.03**
E 850–82 Practice for Use of Process Waste in Structural Fill, **11.04**
E 851–81(1985) Practice for Evaluation of Spectrochemical Laboratories, **03.06**
E 852–82(1987) Method for Analysis of C_4-C_{13} Plasticizer Grade Alcohols, **06.03,15.05**
E 853–87 Practice for Analysis and Interpretation of Light-Water Reactor Surveillance Results, **12.02**
E 854–81 Method for Application and Analysis of Solid State Track Recorder (SSTR) Monitors for Reactor Surveillance, **12.02**
E 855–84 Method for Bend Testing for Metallic Flat Materials for Spring Applications, **03.01**
E 856–83 Definitions of Terms Relating to Physical and Chemical Characteristics of Refuse-Derived Fuels, **11.04**
E 857–87 Practice for Conducting Substrate Dietary Toxicity Tests with Avian Species, **11.04**
E 858–82 Test Method for Birefringence in Fibers of Circular Cross Section by a Variable Compensator, **14.01**
E 859–82 Test Method for Air Erosion of Sprayed Fire-Resistive Materials Applied to Structural Members, **04.07**
E 860–82(1987) Practice for Examining and Testing Items that Are or May Become Involved in Products Liability Litigation, **14.02**
E 861–82(1988) Practice for Evaluating Thermal Insulation Materials for Use in Solar Collectors, **12.02**
E 862–82 Practice for Screening Polymeric Containment Materials for the Effects of Heat and Heat Transfer Fluids in Solar Heating and Cooling Systems, **12.02**
E 863–82(1986) Practice for Describing Flame Atomic Absorption Spectroscopy Equipment, **03.06**
E 864–84 Practice for Surface Preparation of Aluminum Alloys to be Adhesively Bonded in Honeycomb Shelter Panels, **04.07**
E 865–82 Specification for Structural Film Adhesives for Honeycomb Sandwich Panels, **04.07**
E 866–82 Specification for Corrosion-Inhibiting Adhesive Primer for Aluminum Alloys to be Adhesively Bonded in Honeycomb Shelter Panels, **04.07**
E 867–87 Definitions of Terms Relating to Traveled Surface Characteristics, **04.03**
E 868–82(1988) Method for Conducting Performance Tests on Mechanical Conveying Equipment Used in Resource Recovery Systems, **11.04**
E 869–82(1987) Method for Performance Evaluation of Fermentation Fuel Manufacturing Facilities, **12.02**
E 870–82(1987) Test Methods for Analysis of Wood Fuels, **12.02**
E 871–82(1987) Method of Moisture Analysis of Particulate Wood Fuels, **12.02**
E 872–82(1987) Test Method for Volatile Matter in the Analysis of Particulate Wood Fuels, **12.02**
E 873–82(1987) Test Method for Bulk Density of Densified Particulate Biomass Fuels, **12.02**
E 874–82 Practice for Adhesive Bonding of Aluminum Facings to Nonmetallic Honeycomb Core for Shelter Panels, **04.07**
E 875–88 Test Method for Efficacy of Fungal Control Agents as Preservatives for Aqueous-Based Products Used in the Paper Industry, **11.04**
E 876–88 Practice for Use of Statistics in the Evaluation of Spectrometric Data, **03.06**
E 877–82(1986) Method for Sampling and Sample Preparation of Iron Ores, **03.05**
E 878–82(1986) Test Method for Titanium in Iron Ores by the Diantipyryl-Methane Photometric Method, **03.05**
E 879–82 Specification for Thermistor Sensors for Clinical Laboratory Temperature Measurement, **14.03**
E 880–82(1987) Guide for Evaluating the Usefulness of Herbicides on Corn (All Types), **11.04**
E 881–82(1988) Practice for Exposure of Solar Collector Cover Materials to Natural Weathering Under Conditions Simulating Stagnation Mode, **12.02**
E 882–87 Guide for Accountability and Quality Control in the Chemical Analysis Laboratory, **03.05**
E 883–84 Guide for Metallographic Photomicrography, **03.01**
E 884–82 Practice for Sampling Airborne Microorganisms at Municipal Solid Waste Processing Facilities, **11.04**
E 885–88 Test Method for Analysis of Metals in Refuse-Derived Fuel (RDF) by Atomic Absorption Spectrophotometry, **11.04**
E 886–88 Test Method for Dissolution of Refuse-Derived Fuel (RDF) Ash Samples for Analysis of Metals, **11.04**
E 887–88 Test Method for Silica in Refuse-Derived Fuel (RDF) and RDF Ash, **11.04**
E 888 Not Yet Assigned
E 889–82(1988) Test Method for Composition or Purity of a Solid Waste Materials Stream, **11.04**
E 890–82(1988) Specification for Disposable Glass Culture Tubes, **14.02**
E 891–87 Terrestrial Direct Normal Solar Spectral Irradiance Tables for Air Mass 1.5, **12.02**
E 892–87 Terrestrial Solar Spectral Irradiance Tables at Air Mass 1.5 for a 37° Tilted Surface, **12.02**
E 893 Redesignated C 989
E 894–88 Test Method for Anchorage of Permanent Metal Railing Systems and Rails for Buildings, **04.07**
E 895–82 Practice for Determination of Hydrolysis Rate Constants of Organic Chemicals in Aqueous Solutions, **11.04**
E 896–87 Test Method for Conducting Aqueous Direct Photolysis Tests, **11.04**
E 897–88 Test Method for Volatile Matter in the Analysis Sample of Refuse Derived Fuel, **11.04**
E 898–82 Method of Testing Top-Loading, Direct-Reading Laboratory Scales and Balances, **14.02**
E 899–82(1987) Guide for Records Management in Mass Spectrometry Laboratories Performing Analysis in Support of Nonclinical Laboratory Studies, **14.01**
E 900–87 Guide for Predicting Neutron Radiation Damage to Reactor Vessel Materials, **12.02**
E 901–82 Classification System for Uranium Resources, **12.02**

EXHIBIT 17

1989 ANNUAL BOOK OF ASTM STANDARDS

SECTION 00

Index



VOLUME 00.01 **Subject Index; Alphanumeric List**

Revision issued annually

TA401
.A653
v.00.01,1989

COPYRIGHT OFFICE
JAN 30 1990
LIBRARY OF CONGRESS

Editorial Staff

Director, Standards Publications:
Roberta A. Storer
Associate Standards Editor:
Joan L. Cornillot
Editors:
Paula C. Fazio
Maryann Gorman
Elizabeth L. Gutman
Catherine T. Hsia
Gillian Johns
Joanne Kramer
Christine M. Leinweber
Patricia A. McGee
Susan P. Milligan
Kenneth W. O'Brien
Editorial Assistants:
Susan P. Canning
Donna Fisher
Mary Barr Martin
Kimberly T. Weidner
Senior Indexer:
H. Joel Shupak

Library of Congress Catalog Card Number: 83-641658

ISBN 0-8031-1381-1 (set)
ISBN 0-8031-1380-3 (volume)

ISSN 0192-2998

Copyright © by AMERICAN SOCIETY FOR TESTING AND MATERIALS 1989

Printed in Easton, MD, U.S.A.

Alphanumeric List

ASTM Standards

Standards:

Specifications	2697
Test Methods	5542
Terminology	168
Total	8407

Each ASTM Standard has a unique serial designation. It is comprised of a capital letter indicating general classification (A, ferrous metals; B, nonferrous metals; C, cementitious, ceramic, concrete, and masonry materials; D, miscellaneous materials; E, miscellaneous subjects; F, materials for specific applications; G, corrosion, deterioration, and degradation of materials; ES, emergency standards; P, proposals), a serial number (one to four digits), a dash, and the year of issue. The number following the dash indicates the year of original adoption as standard or, in the case of revision, the year of last revision. Thus, standards adopted or revised during the year 1989 have as their final number, 89. A letter following this number indicates more than one revision during that year, that is 89a indicates the second revision in 1989, 89b the third revision, etc. Standards that have been reapproved without change are indicated by the year of last reapproval in parentheses as part of the designation number, for example, (1989).

A letter M after the serial number designates a "metric standard," that is, a standard which contains "hard metric" units.

When reference is made to a standard, the *complete* designation should be given. Best practice is to state the *designation and title.*

The boldface number(s) following the title refer to the volume(s) of the *Annual Book of ASTM Standards* in which the standard appears.

This index includes only those standards which appear in the 1989 edition of each volume of the *Annual Book of ASTM Standards*. New and revised standards that were approved after the closing date for the volume are available as separate reprints and will be listed in next year's index.

D 3226 Discontinued
D 3227–83 Test Method for Mercaptan Sulfur in Gasoline, Kerosine, Aviation Turbine, and Distillate Fuels (Potentiometric Method), **05.02**
D 3228–83 Test Method for Total Nitrogen in Lubricating Oils and Fuel Oils by Modified Kjeldahl Method, **05.02**
D 3229–88 Test Method for Low Levels of Lead in Gasoline by X-Ray Spectrometry, **05.02**
D 3230–83 Test Method for Salts in Crude Oil (Electrometric Method), **05.02**
D 3231–83 Test Method for Phosphorus in Gasoline, **05.02**
D 3232–88 Method for Measurement of Flow Properties of Lubricating Greases at High Temperatures, **05.02**
D 3233–86 Method for Measurement of Extreme Pressure Properties of Fluid Lubricants (Falex Methods), **05.02**
D 3234–88 Test Method for Abrasion Resistance of Wax Coatings, **05.02**
D 3235–88 Test Method for Solvent Extractables in Petroleum Waxes, **05.02**
D 3236–88 Test Method for Apparent Viscosity of Hot Melt Adhesives and Coating Materials, **05.02**
D 3237–79(1984) Test Method for Lead in Gasoline by Atomic Absorption Spectrometry, **05.02**
D 3238–85 Method for Calculation of Carbon Distribution and Structural Group Analysis of Petroleum Oils by the n-d-M Method, **05.02**
D 3239–86 Method for Aromatic Types Analysis of Gas-Oil Aromatic Fractions by High Ionizing Voltage Mass Spectrometry, **05.02**
D 3240–86a Test Method for Undissolved Water in Aviation Turbine Fuels, **05.02**
D 3241–88a Test Method for Thermal Oxidation Stability of Aviation Turbine Fuels (JFTOT Procedure), **05.02**
D 3242–87 Test Method for Total Acidity in Aviation Turbine Fuel, **05.02**
D 3243 Discontinued—Replaced by D 3828
D 3244–77(1983) Practice for Utilization of Test Data to Determine Conformance with Specifications, **05.02**
D 3245–85 Test Method for Pumpability of Industrial Fuel Oils, **05.02**
D 3246–81(1987) Test Method for Sulfur in Petroleum Gas by Oxidative Microcoulometry, **05.02**
D 3247 Discontinued 1988—Replaced by D 4521: Test Method for Coefficient of Static Friction of Corrugated and Solid Fiberboard (Horizontal Plane Method)
D 3248 Discontinued 1988—Replaced by D 4521: Test Method for Coefficient of Static Friction of Corrugated and Solid Fiberboard (Inclined Plane Method)
D 3249–79 Recommended Practice for General Ambient Air Analyzer Procedures, **11.03**
D 3250–77(1982) Test Method for Total Oxygen Demand in Water, **11.02**
D 3251–84 Test Method for Thermal-Aging Characteristics of Electrical Insulating Varnishes Applied Over Film-Insulated Magnet Wire, **10.01**
D 3252 Discontinued
D 3253–81 Specification for Vulcanized Rubber Sheeting for Pond, Canal, and Reservoir Lining, **04.08**
D 3254–81 Specification for Fabric-Reinforced Vulcanized Rubber Sheeting for Pond, Canal, and Reservoir Linings, **04.08**
D 3255 Discontinued
D 3256–86 Method for Chemical Analysis of Phthalocyanine Blue and Green Pigments, **06.02**
D 3257–88 Test Method for Aromatics in Mineral Spirits by Gas Chromatography, **06.03**
D 3258–80(1987) Test Method for Porosity of Paint Films, **06.01**
D 3259–84 Recommended Practice for Infared Determination of the Temperature of Applied Coatings on Wood Products During the Curing Cycle, **06.01**
D 3260–82(1987) Test Method for Resistance to Acid and Mortar of Factory-Applied Clear Coatings on Extruded Aluminum Products, **06.01**
D 3261–88a Specification for Butt Heat Fusion Polyethylene (PE) Plastic Fittings for Polyethylene (PE) Plastic Pipe and Tubing, **08.04**
D 3262–87 Specification for Reinforced Plastic Mortar Sewer Pipe, **08.04**
D 3263–82 Test Methods for Corrosivity of Solvent Systems for Removing Water-Formed Deposits, **11.02**
D 3264–86 Specification for Aniline **06.03**
D 3265–88 Test Method for Carbon Black—Tint Strength, **09.01**
D 3266–79 Methods for Automated Separation and Collection of Particulate and Acidic Gaseous Fluoride in the Atmosphere (Double Paper Tape Sampler Method), **11.03**
D 3267–88 Methods for Continuous Separation and Collection of Particulate and Water-Soluble Gaseous Fluorides in the Atmosphere (Filter and Impinger Method), **11.03**
D 3268–89 Methods for Separation and Collection of Particulate and Gaseous Fluorides in the Atmosphere (Sodium Bicarbonate-Coated Glass Tube and a Particulate Filter Method), **11.03**
D 3269–79 Method for Analysis for Fluoride Content of the Atmosphere and Plant Tissues (Manual Procedures), **11.03**
D 3270–80 Method for Analysis for Fluoride Content of the Atmosphere and Plant Tissues (Semiautomated Method), **11.03**
D 3271–87 Practice for Direct Injection of Solvent-Reducible Paints into a Gas Chromatograph for Solvent Analysis, **06.01**
D 3272–76(1988) Test Method for Vacuum Distillation of Solvents from Solvent Base Paints for Analysis, **06.01**
D 3273–86 Test Method for Resistance to Growth of Mold on the Surface of Interior Coatings in an Environmental Chamber, **06.01**
D 3274–82(1988) Method for Evaluating Degree of Surface Disfigurement of Paint Films by Microbial (Fungal or Algal) Growth or Soil and Dirt Accumulation, **06.01**
D 3275–89 Specification for E-CTFE-Fluoroplastic Molding, Extrusion, and Coating Materials, **08.03**
D 3276–86 Guide for Paint Inspectors (Metal Substrates), **06.01**
D 3277–85 Test Method for Moisture Content of Oil-Impregnated Cellulosic Insulation, **10.03**
D 3278–82 Test Methods for Flash Point of Liquids by Setaflash-Closed-Cup Apparatus, **06.03**
D 3279–88 Test Method for *n*-Heptane Insolubles, **04.03**
D 3280–85 Method for Analysis of White Zinc Pigments, **06.02**
D 3281–84 Test Method for Formability of Attached Organic Coatings with Impact-Wedge Bend Apparatus, **06.01**
D 3282–83 Recommended Practice for Classification of Soils and Soil-Aggregate Mixtures for Highway Construction Purposes, **04.08**
D 3283–73(1989) Specification for Air as an Electrical Insulating Material, **10.03**
D 3284–84 Test Method for Combustible Gases in Electrical Apparatus in the Field, **10.03**
D 3285 Discontinued
D 3286–85 Test Method for Gross Calorific Value of Coal and Coke by the Isothermal Bomb Calorimeter, **05.05**
D 3287–88 Specification for Biaxially Oriented Polyethylene (PEO) Plastic Pipe (SDR-PR) Based on Controlled Outside Diameter, **08.04**
D 3288–82 Method of Testing Magnet-Wire Enamels, **10.02**
D 3289–85 Test Method for Specific Gravity or Density of Semi-Solid and Solid Bituminous Materials by Nickel Crucible, **04.03**
D 3290–86 Specification for Bond and Ledger Papers for Permanent Records, **15.09**
D 3291–88 Practice for Compatibility of Plasticizers in Poly(Vinyl Chloride) Plastics Under Compression, **08.03**
D 3292 Discontinued
D 3293–81(1988) Specification for PTFE Resin Molded Sheet, **08.03**
D 3294–81 Specification for PTFE Resin Molded Basic Shapes, **08.03**
D 3295–81a(1988) Specification for PTFE Tubing, **08.03**
D 3296–81a(1988) Specification for FEP-Fluorocarbon Tubing, **08.03**
D 3297–88 Practice for Molding and Machining Tolerances for PTFE Resin Parts, **08.03**
D 3298 Discontinued 1989: Specification for Perforated Styrene-Rubber (SR) Plastic Drain Pipe
D 3299–88 Specification for Filament-Wound Glass Fiber Reinforced Thermoset Resin Chemical-Resistant Tanks, **08.04**
D 3300–85 Test Method for Dielectric Breakdown Voltage of Insulating Oils of Petroleum Origin Under Impulse Conditions, **10.03**
D 3301–85 Specification for File Folders for Storage of Permanent Records, **15.09**
D 3302–89a Test Method for Total Moisture in Coal, **05.05**
D 3303 Discontinued
D 3304–77(1983) Method for Analysis of Environmental Materials for Polychlorinated Biphenyls, **10.03**
D 3305–84 Method for Sampling Gas from a Transformer, **10.03**
D 3306–89 Specification for Ethylene Glycol Base Engine Coolant, **15.05**
D 3307–86 Specification for PFA-Fluorocarbon Molding and Extrusion Materials, **08.03**
D 3308–81(1988) Specification for PTFE Resin Skived Tape, **08.03**
D 3309–88a Specification for Polybutylene (PB) Plastic Hot-Water Distribution Systems, **08.04**
D 3310–74(1983) Recommended Practice for Determining Corrosivity of Adhesive Materials, **15.06**
D 3311–86 Specification for Drain, Waste, and Vent (DWV) Plastic Fittings Patterns, **08.04**
D 3312–85 Test Method for Percent Reactive Monomer in Solventless Varnishes, **10.01**
D 3313–88 Recommended Practice for Carbon Black—Individual Pellet Crush Strength, **09.01**
D 3314–87 Methods for Rubber—Chemical Analysis for Polystyrene Blocks in SBR (Styrene-Butadiene Rubber) and Styrene-Reinforced Latices, **09.01**
D 3315–86 Test Method for Radioactive Zirconium in Water, (Intent to Withdraw), **11.02, 12.01**
D 3316–85 Test Method for Stability of Perchloroethylene with Copper, **15.05**
D 3317 Discontinued
D 3318 Discontinued
D 3319–83 Recommended Practice for Accelerated Polishing of Aggregates Using the British Wheel, **04.03**
D 3320–79(1984) Specification for Emulsified Coal-Tar Pitch (Mineral Colloid Type), **04.04**
D 3321–88 Recommended Practice for Use of the Refractometer for Determining the Freezing Point of Aqueous Engine Coolants, **15.05**
D 3322–82(1987) Recommended Practice for Testing Primers and Primer Surfacers Over Preformed Metal, **06.01**
D 3323–80(1988) Recommended Practice for Testing Interior Solvent-Thinned Flat Wall Paints, **06.01**
D 3324–88 Practice for Carbon Black—Improving Test Reproducibility Using ASTM Reference Blacks, **09.01**
D 3325–85 Practice for Preservation of Waterborne Oil Samples, **11.02**
D 3326–84 Practices for Preparation of Sample for Identification of Waterborne Oils, **11.02**
D 3327–79 Method for Analysis of Selected Elements in Waterborne Oils, **11.02**
D 3328–78(1982) Method for Comparison of Waterborne Petroleum Oils by Gas Chromatography, **11.02**

D 4805–89 Terminology of Plastics Standards, **08.03**
D 4806–88 Specification for Denatured Fuel Ethanol To Be Blended with Gasoline as an Automotive Spark-Ignition Engine Fuel, **05.03**
D 4807–88 Test Method for Sediment in Crude Oil by Membrane Filtration, **05.03**
D 4808–88 Test Method for Hydrogen Content of Petroleum Products by Low Resolution Nuclear Magnetic Resonance Spectroscopy, **05.03**
D 4809–88 Test Method for Heat of Combustion of Liquid Hydrocarbon Fuels by Bomb Calorimeter (Intermediate Precision Method), **05.03**
D 4810–88 Test Method for Hydrogen Sulfide in Natural Gas Using Length-of-Stain Detector Tubes, **05.05**
D 4811 Not yet assigned
D 4812–88 Test Method for Unnotched Cantilever Beam Impact Strength of Plastics, **08.03**
D 4813 Not yet assigned
D 4814–88a Specification for Automotive Spark-Ignition Engine Fuel, **05.03**
D 4815–88 Test Method for Analysis of C_1 to C_4 Alcohols and MTBE in Gasoline by Gas Chromatography, **05.03**
D 4816–88 Test Method for Specific Heat of Aircraft Turbine Fuels by Thermal Analysis, **05.03**
D 4817–88 Classification for Rubber Compounding Materials—Stearic Acid, **09.01**
D 4818–89 Classification for Rubber Compounding Materials—Vulcanization Accelerators, **09.01**
D 4819–88 Specification for Flexible Cellular Materials Made for Polyolefin Plastics, **09.02**
D 4820–88 Test Methods for Carbon Black-Surface Area by Multipoint B. E. T. Nitrogen Adsorption, **09.01**
D 4821–88 Practice for Carbon Black—Validation of Test Method Precision and Bias, **09.01**
D 4822–88 Guide for Selection of Methods of Particle Size Analysis of Fluvial Sediments (Manual Methods), **11.02**
D 4823–88 Guide for Core-Sampling Submerged, Unconsolidated Sediments, **11.02**
D 4824–88 Test Method for Determination of Catalyst Acidity by Ammonia Chemisorption, **05.03**
D 4825–88 Test Method for Measurement of Curl in Cut-Sized Office Paper, **15.09**
D 4826–88 Practice for Units of Measurement and Conversion Factors for Pulp, Paper, and Paperboard, **15.09**
D 4827–88 Test Method for Determining the Unreacted Monomer Content of Latexes Using Capillary Column Gas Chromatography, **06.02**
D 4828–88 Test Method for Practical Evaluation of Washability of Organic Coatings, **06.01**
D 4829–88 Test Method for Expansion Index of Soils, **04.08**
D 4830–88 Test Methods for Characterizing Thermoplastic Fabrics Used in Roofing and Waterproofing, **04.04**
D 4831–88 Test Method for Buckle Tear Strength of Leather, **15.04**
D 4832–88 Test Method for Preparation and Testing of Soil-Cement Slurry Test Cylinders, **04.08**
D 4833–88 Test Method for Index Puncture Resistance of Geotextiles, Geomembranes, and Related Products, **04.08**
D 4834–88 Test Method for Detection of Lead in Paint by Direct Aspiration Atomic Absorption Spectroscopy, **06.01**
D 4835–88 Specification for Propylene Glycol Monomethyl Ether Acetate, **06.03**
D 4836–88 Test Method for Purity of Propylene Glycol Monomethyl Ether, Dipropylene Glycol Monomethyl Ether and Propylene Glycol Monomethyl Ether Acetate, **06.03**
D 4837–88 Specification for Propylene Glycol Monomethyl Ether, **06.03**
D 4838–88 Test Method for Determining the Relative Tinting Strength of Chromatic Paints, **06.03**
D 4839–88 Test Method for Total Carbon and Inorganic Carbon in Water by Ultraviolet, or Persulfate Oxidation, or Both, and Infrared Detection, **11.02**
D 4840–88 Guide for Sampling Chain of Custody Procedures, **11.01**
D 4841–88 Practice for Estimation of Holding Time for Water Samples Containing Organic and Inorganic Constituents, **11.01**
D 4842 Not yet assigned
D 4843–88 Test Method for Wetting and Drying Test of Solid Wastes, **11.04**
D 4844–88 Guide for Air Monitoring at Waste Management Facilities for Worker Protection, **11.04**
D 4845–89 Terminology Relating to Wool, **07.02**
D 4846–88 Test Method for Resistance to Unsnapping of Snap Fasteners, **07.02**
D 4847–88 Specifications for Woven Awning and Canopy Fabrics, **07.01**
D 4848–89 Terminology Relating To Tensile Properties of Textiles, **07.02**
D 4849–89 Terminology Relating to Yarn, **07.01**
D 4850–89 Terminology Relating to Fabric, **07.01**
D 4851–88 Test Methods for Coated and Laminated Fabrics for Architectural Use, **07.01**
D 4852–88 Practice for Evaluation of Attached Upholstery Fabrics, **07.01**
D 4853–88 Guide for Reducing Test Variability, **07.01**
D 4854–88 Guide for Estimating the Magnitude of Variability from Expected Sources in Sampling Plans, **07.01**
D 4855–88 Practice for Comparing Test Methods, **07.01**
D 4856–88 Test Method for Sulfuric Acid Mist in the Workplace Atmosphere (Ion Chromatographic), **11.03**
D 4857–88 Test Method for Determination of the Ability of Lubricants to Minimize Ring Sticking and Piston Deposits in Two-Stroke-Cycle Gasoline Engines Other Than Outboards, **05.03**
D 4858–88 Test Method for Determination of the Tendency of Lubricants to Promote Preignition in Two-Stroke-Cycle Gasoline Engines, **05.03**
D 4859–88 Specification for Lubricants for Two-Stroke-Cycle Spark-Ignition Gasoline Engines—TC, **05.03**
D 4860–88 Test Method for Free Water and Particulate Contamination in Mid-Distillate Fuels (Clear and Bright Numerical), **05.03**
D 4861–88 Practice for Sampling and Analysis of Pesticides and Polychlorinated Biphenyls in Indoor Atmospheres, **11.03**
D 4862–88 Test Method for Evaluating Hydraulic Transmission Fluid Antiwear Properties, **05.03**
D 4863–88 Test Method for Determination of the Lubricity of Two-Stroke Gasoline Engine Lubricants, **05.03**
D 4864–88 Test Method for the Determination of Traces of Methanol in Propylene Concentrates by Gas Chromatography, **05.03**
D 4865–88 Guide for the Generation and Dissipation of Static Electricity in Petroleum Fuel Systems, **05.03**
D 4866–88 Performance Standard for Coal Tar Pitch Emulsion Pavement Sealer Formulations Containing Mineral Aggregates and Optional Polymeric Admixtures, **04.04**
D 4867–88 Test Method for Effect of Moisture on Asphalt Concrete Paving Mixtures, **04.03**
D 4868–88 Test Method for Estimation of Net and Gross Heat of Combustion of Petroleum Fuels, **05.03**
D 4869–88 Specification for Asphalt-Saturated Organic Felt Shingle Underlayment Used in Roofing, **04.04**
D 4870–88 Test Method for Total Sediment in Residual Fuels, **05.03**
D 4871–88 Guide for Universal Oxidation/Thermal Stability Test Apparatus, **05.03**
D 4872–88 Test Method for Dielectric Testing of Wire and Cable Filling Compounds, **05.03**
D 4873–88 Guide for Identification, Storage, and Handling of Geotextiles, **04.08**
D 4874–89 Method for Leaching Solid Waste in a Column Apparatus, **11.04**
D 4875–88 Test Methods of Polyurethane Raw Materials: Determination of the Polymerized Ethylene Oxide Content of Polyether Polyols, **08.03**
D 4876–88 Test Method for Polyurethane Raw Materials: Determination of Acidity of Crude or Modified Isocyanates, **08.03**
D 4877–88 Test Method for Polyurethane Raw Materials: Determination of Color in Isocyanates, **08.03**
D 4878–88 Test Method for Polyurethane Raw Materials: Determination of Viscosity of Polyols, **08.03**
D 4879 Not yet assigned
D 4880–88 Test Method for Salt Water Proffness of Insulating Varnishes Over Enamelled Magnet Wire, **10.01**
D 4881–88 Test Method for Thermal Endurance of Varnished Fibrous or Film Wrapped Magnet Wire, **10.01**
D 4882–88 Test Method for Bond Strength of Electrical Insulating Varnishes by the Twisted Coil Test, **10.01**
D 4883–89 Test Method for Density of Polyethylene by the Ultrasound Technique, **08.03**
D 4884 Not yet assigned
D 4885–88 Test Method for Determining Performance Tensile Strength of Geomembranes Using Wide Strip Testing, **04.08**
D 4886–88 Test Method for Abrasion Resistance of Geotextiles (Sand Paper/Sliding Block Method), **04.08**
D 4887–89 Practice for Preparation of Viscosity Blends for Hot Recycled Bituminous Materials, **04.03**
D 4888–88 Test Method for Water Vapor in Natural Gas Using Length-of-Stain Detector Tubes, **05.05**
D 4889–88 Test Method for Polyurethane Raw Materials: Determination of Viscosity of Crude or Modified Isocyanates, **08.03**
D 4890–88 Test Method for Polyurethane Raw Materials: Determination of Gardner and APHA Color of Polyols, **08.03**
D 4891–89 Test Method for Heating Value of Gases in Natural Gas Range by Stoichiometric Combustion, **05.05**
D 4892 Not yet assigned
D 4893–89 Test Method for Determination of Pitch Volatility, **04.04**
D 4894–89 Specification for Polytetrafluoroethylene (PTFE) Granular Molding and Ram Extrusion Materials, **08.03**
D 4895–89 Specification for Polytetrafluoroethylene (PTFE) Resins Produced from Dispersion, **08.03**
D 4896–89 Guide for Use of Adhesive-Bonded Single Lap-Joint Specimen Test Results, **15.06**
D 4897 Not yet assigned
D 4898–73(1983) Test Method for Insoluble Contamination of Hydraulic Fluids by Gravimetric Analysis, **05.03**
D 4899–89 Practice for Analysis of Vegetable Tanning Materials—General, **15.04**
D 4900–89 Test Method for Lignosulfonates (Sulfite Cellulose) in Tanning Extracts, **15.04**
D 4901–89 Practice for Preparation of Solution of Liquid Vegetable Tannin Extracts, **15.04**
D 4902–89 Practice for Evaporation and Drying of Analytical Solutions, **15.04**
D 4903–89 Test Method for Total Solids and Water in Vegetable Tanning Material Extracts, **15.04**
D 4904–89 Practice for Cooling of Analytical Solutions, **15.04**
D 4905–89 Practice for Preparation of Solution of Solid, Pasty and Powdered Vegetable Tannin Extracts, **15.04**
D 4906–89 Method for Total Solids and Ash in Leather Finishing Materials, **15.04**

F 1061 Not yet assigned
F 1062–88 Method of Verification of Ski Binding Test Devices, **15.07**
F 1063 Not yet assigned
F 1064 Not yet assigned
F 1065 Not yet assigned
F 1066–87 Specification for Vinyl Composition Floor Tile, **15.04**
F 1067–87 Method for Determining the Performance of a Petroleum Product Filter Cartridge Using a Single-Pass Constant Rate Procedure, **14.02**
F 1068–87 Specification for Doors, Double, Gastight/Airtight, Individually Dogged, for Marine Use, **01.02**
F 1069–87 Specification for Doors, Watertight, Gastight/Airtight, and Weathertight, Individually Dogged, for Marine Use, **01.02**
F 1070–87 Specification for Doors, Non-Tight, for Marine Use, **01.02**
F 1071–87 Specification for Expanded Metal Bulkhead Panels, **01.02**
F 1072–87 Specification for Expanded Metal Door, **01.02**
F 1073–87 Specification for Door Fittings, for Watertight, Gastight, Airtight, Weathertight, and Non-Tight Doors for Marine Use, **01.02**
F 1074–87 Specification for Cleats, Welded Horn Type, **01.02**
F 1075–87 Specification for Dehumidifier, Mechanically Refrigerated, Self Contained, **01.02**
F 1076–87 Practice for Expanded Welded and Silver Brazed Socket Joints for Pipe and Tube, **01.02**
F 1077–87 Guide for the Selection of Committee F-16 Fastener Specifications, **15.08**
F 1078–87 Terminology for Surgical Scissors—Inserted Blades, **13.01**
F 1079–87 Specification for Inserted and Noninserted Surgical Scissors, **13.01**
F 1080–87 Practice for Determining the Consistency of Viscous Liquids Using a Consistometer, **15.03**
F 1081–87 Specification for Competition Wrestling Mats, **15.07**
F 1082–87 Practice for Tires—Determining Precision for Test Method Standards, **09.02**
F 1083–87 Specification for Pipe, Steel, Hot-Dipped Zinc-Coated (Galvanized) Welded, For Fence Structures, **01.06**
F 1084–87 Guide for Sampling Oil/Water Mixtures for Oil Spill Recovery Equipment, **11.04**
F 1085–88 Specification for Mattress and Box Springs, Berths, **01.02**
F 1086–87 Guidelines for Structures and Responsibilities of Emergency Medical Services Systems Organizations, **13.01**
F 1087–88 Test Method for Linear Dimensional Stability of a Gasket Material to Moisture, **09.02**
F 1088–87 Specification for Beta-Tricalcium Phosphate for Surgical Implantation, **13.01**
F 1089–87 Test Method for Corrosion of Surgical Instruments, **13.01**
F 1090–87 Classification for Bank and Mercantile Vault Construction, **15.07**
F 1091 Not yet assigned
F 1092–87 Specification for Fiberglass (GRP) Pultruded Open-Weather Storm and Guard Square Handrails, **01.02**
F 1093 Not yet assigned
F 1094–87 Test Methods for Microbiological Monitoring of Water Used for Processing Electron and Microelectronic Devices by Direct-Pressure Tap Sampling Valve and by the Pre-Sterilized Plastic Bag Method, **10.04**
F 1095–88 Test Method for Rapid Enumeration of Bacteria in Electronics Grade Purified Water Systems by Direct-Count Epifluorescence Microscopy, **10.04**
F 1096–87 Test Method for Measuring Mosfet Saturated Threshold Voltage, **10.04**
F 1097 Not yet assigned
F 1098–87 Specification for Envelope Dimensions for Butterfly Valves—NPS 2 to 24, **01.02**
F 1099–87 Specification for Rat Guards, Ships, **01.02**
F 1100 Not yet assigned
F 1101 Not yet assigned
F 1102–87 Guide for Preparation of Use and Care Booklets for Residential Resilient Vinyl Floor Coverings, **15.04**
F 1103–87 Test Method for Materials Response to Flame—45° (For Aerospace Vehicles), **15.03**
F 1104–87 Test Method for Preparing Aircraft Cleaning Compounds, Liquid Type, Water Base, for Storage Stability Testing, **15.03**
F 1105–87 Test Method for Preparing Aircraft Cleaning Compounds, Liquid Type, Solvent Based for Storage Stability Testing, **15.03**
F 1106–87 Specification for Warping Heads, Rope Handling (Gypsy Head, Capstan Head), **01.02**
F 1107–88 Definitions of Terms Relating to Snowboarding, **15.07**
F 1108–88 Specification for TI6A14V Alloy Castings for Surgical Implants, **13.01**
F 1109–87 Specification for Porous Composites of Polytetrafluoroethylene and Carbon for Surgical Implant Applications, **13.01**
F 1110–88 Test Method for Sandwich Corrosion Test, **15.03**
F 1111–88 Test Method for Corrosion of Low Embrittling Cadmium Plate by Aircraft Maintenance Chemicals, **15.03**
F 1112–89 Test Method for Static Testing of Tubeless Pneumatic Tires for Rate of Loss of Inflation Pressure, **09.02**
F 1113–87 Test Method for Electrochemical Measurement of Diffusable Hydrogen in Steels (Barnacle Electrode), **15.03**
F 1114–88 Specification for Heat Sanitizing Commercial, Pot, Pan and Utensil Station Rack Type Water Driven Rotary Spray, **15.07**
F 1115–87 Test Method for Determining the Carbon Dioxide Loss of Beverage Containers, **15.09**
F 1116–88 Test Method for Determining Dielectric Strength of Overshoe Footwear, **10.03**
F 1117–87 Specification for Dielectric Overshoe Footwear, **10.03**
F 1118 Not yet assigned
F 1119 Not yet assigned
F 1120–87 Specification for Circular Metallic Bulbous Type Expansion Joints, **01.02**
F 1121–87 Specification for International Shore Connections for Marine Fire Applications, **01.02**
F 1122–87 Specification for Quick Disconnect Couplings, **01.02**
F 1123–87 Specification for Non-Metallic Expansion Joints, **01.02**
F 1124 Not yet assigned
F 1125–87 Terminology of Image Quality in Impact Printing Systems, **15.09**
F 1126 Not yet assigned
F 1127–88 Guide for Containment by Emergency Response Personnel of Hazardous Material Spills, **11.04**
F 1128–88 Test Method for Abrasion Resistance of Transparent Plastics and Coatings Using the Salt Impingement Method, **15.03**
F 1129–88 Guide for Using Aqueous Foams to Control the Vapor Hazard from Immiscible Volatile Liquids, **11.04**
F 1130–88 Practice for Inspecting the Coating System of Ship's Topside and Superstructure, **01.02**
F 1131–88 Practice for Inspecting the Coating System of Ship's Tanks and Voids, **01.02**
F 1132–88 Practice for Inspecting the Coating System of Ships Decks and Deck Machinery, **01.02**
F 1133–88 Practice for Inspecting the Coating System of Ship's Underwater Hull and Boottop During Drydocking, **01.02**
F 1134–88 Specification for Insulation Resistance Monitor for Shipboard Electrical Motors and Generators, **01.02**
F 1135–88 Specification for Cadmium or Zinc Chromate Organic Corrosion Protective Coating for Fasteners, **15.08**
F 1136–88 Specification for Chromium/Zinc Corrosion Protective Coatings for Fasteners, **15.08**
F 1137–88 Specification for Phosphate/Oil and Phosphate/Organic Corrosion Protective Coatings for Fasteners, **15.08**
F 1138–88 Specification for Spray Shields for Mechanical Joints, **01.02**
F 1139–89 Specification for Steam Traps and Drains, **01.02**
F 1140–88 Test Methods for Failure Resistance of Unrestrained and Nonrigid Packages for Medical Applications, **15.09**
F 1141–88 Specification for Wallcovering, **15.07**
F 1142–88 Specification for Manhole Cover Assembly Bolted, Semi-Flush, Oiltight and Watertight, **01.02**
F 1143–88 Specification for Manhole Cover Assembly Raised, Oiltight, and Watertight, **01.02**
F 1144–88 Specification for Manhole Cover Assembly Bolted, Hinged, Semi-Flush, Oiltight and Watertight, **01.02**
F 1145–88 Specification for Turnbuckler, Swaged Welded, Cast, Forges, **01.02**
F 1146 Not yet assigned
F 1147–88 Test Method for Tension Testing of Porous Metal Coatings, **13.01**
F 1148–88 Specification for Home Playground Equipment (Consumer Safety Performance Specification), **15.07**
F 1149–88 Practice for Qualifications, Responsibilities, and Authority of Individuals and Institutions Providing Medical Direction of Emergency Medical Services, **13.01**
F 1150–88 Specification for Commercial Food Waster Pulper and Waterpress, Assembly/Commercial, **15.07**
F 1151–88 Test Method for Determining Variations in Hardness of Film Ribbon Pancakes, **15.09**
F 1152–88 Test Method for Dimensions of Notches on Silicon Wafers, **10.05**
F 1153–88 Test Method for Characterization of Metal-Oxide-Silicon (MOS) Structures by Capacitance-Voltage Measurements, **10.05**
F 1154–88 Practices for Qualitatively Evaluating the Comfort, Fit, Function, and Integrity of Chemical Protective Suit Ensembles, **15.07**
F 1155–88 Practice for Selection and Application of Piping System Materials, **01.02**
F 1156–88 Terminology Relating to Product Counterfeiting Protection Systems, **15.07**
F 1157–88 Practice for Classifying the Relative Performance of the Physical Properties of Security Seals, **15.07**
F 1158–88 Guide for Inspection and Evaluation of Tampering of Security Seals, **15.07**
F 1159–88 Practice for the Design and Manufacture of Amusement Rides and Devices, **15.07**
F 1160 Not yet assigned
F 1161–88 Specification for Minimum Performance and Safety Requirements for Components and Systems of Anesthesia Gas Machines, **13.01**
F 1162–88 Specification for Pole Vault Landing Pits, **15.07**
F 1163–88 Specification for Headgear Used in Horse Sports and Horseback Riding, **15.07**
F 1164–88 Test Method for Evaluation of Transparent Plastics Exposed to Accelerated Weathering Combined with Biaxial Stress, **15.03**
F 1165–88 Test Method for Measuring Angular Displacement of Multiple Images in Transparent Parts, **15.03**
F 1166–88 Practice for Human Engineering Design for Marine Systems, Equipment and Facilities, **01.02**
F 1167–88 Definitions of Terms Relating to Aseptic Packaging, **15.09**
F 1168–88 Guide for Use in the Establishment of Thermal Processes for Foods

EXHIBIT 18

1990 ANNUAL BOOK OF ASTM STANDARDS

SECTION 00

Index

VOLUME 00.01 Subject Index; Alphanumeric List

Revision issued annually

TA 401
.A653
Vol.00.01, Sect. 00, 1990

Editorial Staff

Director, Standards Publications:
Roberta A. Storer
Associate Standards Editor:
Joan L. Cornillot
Editors:
Paula C. Fazio
Maryann Gorman
Elizabeth L. Gutman
Catherine T. Hsia
Gillian Johns
Joanne Kramer
Christine M. Leinweber
Patricia A. McGee
Susan P. Milligan
Kenneth W. O'Brien
Editorial Assistants:
Susan P. Canning
Donna Fisher
Mary Barr Martin
Kimberly T. Weidner
Senior Indexer:
H. Joel Shupak

Library of Congress Catalog Card Number: 83-641658

ISBN 0-8031-1581-4 (set)
ISBN 0-8031-1580-6 (volume)

ISSN 0192-2998

Copyright © by AMERICAN SOCIETY FOR TESTING AND MATERIALS 1990

Printed in Easton, MD, U.S.A.

Alphanumeric List

ASTM Standards

Standards:

Specifications	2730
Test Methods	5683
Terminology	174
Total	8587

Each ASTM Standard has a unique serial designation. It is comprised of a capital letter indicating general classification (A, ferrous metals; B, nonferrous metals; C, cementitious, ceramic, concrete, and masonry materials; D, miscellaneous materials; E, miscellaneous subjects; F, materials for specific applications; G, corrosion, deterioration, and degradation of materials; ES, emergency standards; P, proposals), a serial number (one to four digits), a dash, and the year of issue.

In each serial designation, the number following the dash indicates the year of original adoption as standard or, in the case of revision, the year of last revision. Thus, standards adopted or revised during the year 1990 have as their final number, 90. A letter following this number indicates more than one revision during that year, that is 90a indicates the second revision in 1990, 90b the third revision, etc. Standards that have been reapproved without change are indicated by the year of last reapproval in parentheses as part of the designation number, for example, (1990). A superscript epsilon indicates an editorial change since the last revision or reapproval; $\epsilon 1$ for the first change, $\epsilon 2$ for the second, etc.

If a standard is written in acceptable metric units and has a companion standard written in inch-pound units (or other units), the metric standard is identified by a letter M after the serial number; this standard contains "hard metric" units.

If a standard is written in inch-pound units (or other units) and acceptable metric units, the document is identified by a dual alphanumeric designation.

When reference is made to a standard, the *complete* designation should be given. Best practice is to state the *designation and title.*

The boldface number(s) following the title refer to the volume(s) of the *Annual Book of ASTM Standards* in which the standard appears.

This list includes only those standards which appear in the 1990 edition of each volume of the *Annual Book of ASTM Standards*. New and revised standards that were approved after the closing date for the volume are available as separate reprints and will be listed in next year's edition.

Each ASTM standard is available as a separate reprint from ASTM. Price and order information are available from ASTM Customer Service, 1916 Race Street, Philadelphia, PA 19103, 215-299-5585.

C 130 Discontinued—Replaced by C 330, C 331, C 332
C 131–89 Test Method for Resistance to Degradation of Small-Size Coarse Aggregate by Abrasion and Impact in the Los Angeles Machine, **04.02, 04.03**
C 132 Discontinued
C 133–84 Test Methods for Cold Crushing Strength and Modulus of Rupture of Refractory Brick and Shapes, **15.01**
C 134–84 Test Methods for Size and Bulk Density of Refractory Brick and Insulating Firebrick, **15.01**
C 135–86 Test Method for True Specific Gravity of Refractory Materials by Water Immersion, **15.01**
C 136–84a Method for Sieve Analysis of Fine and Coarse Aggregates, **04.02, 04.03**
C 137 Discontinued
C 138–81$^{\epsilon 1}$ Test Method for Unit Weight, Yield, and Air Content (Gravimetric) of Concrete, **04.02**
C 139–73(1989)$^{\epsilon 1}$ Specification for Concrete Masonry Units for Construction of Catch Basins and Manholes, **04.05**
C 140–75(1988) Method of Sampling and Testing Concrete Masonry Units, **04.05**
C 141–85(1989) Specification for Hydraulic Hydrated Lime for Structural Purposes, **04.01**
C 142–78(1990) Test Method for Clay Lumps and Friable Particles in Aggregates, **04.02, 04.03**
C 143–90 Test Method for Slump of Portland Cement Concrete, **04.02**
C 144–89 Specification for Aggregate for Masonry Mortar, **04.02, 04.05**
C 145–85 Specification for Solid Load-Bearing Concrete Masonry Units, **04.05**
C 146–80(1989)$^{\epsilon 1}$ Method for Chemical Analysis of Glass Sand, **15.02**
C 147–86 Method for Internal Pressure Test on Glass Containers, **15.02**
C 148–89 Method for Polariscopic Examination of Glass Containers, **15.02**
C 149–86 Method for Thermal Shock Test on Glass Containers, **15.02**
C 150–89 Specification for Portland Cement, **04.01, 04.02**
C 151–89 Test Method for Autoclave Expansion of Portland Cement, **04.01**
C 152 Redesignated E 152
C 153 Discontinued—Combined with C 64
C 154 Discontinued
C 155–84 Classification of Insulating Firebrick, **15.01**
C 156–89 Test Method for Water Retention by Concrete Curing Materials, **04.02**
C 157–89 Test Method for Length Change of Hardened Hydraulic Cement Mortar and Concrete, **04.01, 04.02**
C 158–84(1989)$^{\epsilon 1}$ Method for Flexural Testing of Glass (Determination of Modulus of Rupture), **15.02**
C 159–86 Specification for Vitrified Clay Filter Block, **04.05**
C 160 Redesignated E 160
C 161 Discontinued
C 162–89 Definitions of Terms Relating to Glass and Glass Products, **15.02**
C 163–88 Practice for Mixing Thermal Insulating Cement Samples, **04.06**
C 164 Discontinued
C 165–83 Recommended Practice for Measuring Compressive Properties of Thermal Insulations, **04.06**
C 166–87 Test Methods for Covering Capacity and Volume Change Upon Drying of Thermal Insulating Cement, **04.06**
C 167–90 Test Methods for Thickness and Density of Blanket or Batt Thermal Insulations, **04.06**
C 168–90 Definitions of Terms Relating to Thermal Insulating Materials, **04.06**
C 169–89 Method for Chemical Analysis of Soda-Lime and Borosilicate Glass, **15.02**
C 170–87$^{\epsilon 1}$ Test Method for Compressive Strength of Natural Building Stone, **04.08**
C 171–69(1986) Specification for Sheet Materials for Curing Concrete, **04.02, 15.09**
C 172–90 Method of Sampling Freshly Mixed Concrete, **04.02**
C 173–78 Test Method for Air Content of Freshly Mixed Concrete by the Volumetric Method, **04.02**
C 174–87 Test Method for Measuring Length of Drilled Concrete Cores, **04.02**
C 175 Discontinued—Replaced by C 150
C 176 Discontinued—Replaced by C 64
C 177–85 Test Method for Steady-State Heat Flux Measurements and Thermal Transmission Properties by Means of the Guarded-Hot-Plate Apparatus, **04.06, 08.01, 14.01**
C 178 Discontinued—Combined with C 64
C 179–85(1989) Test Method for Drying and Firing Linear Change of Refractory Plastic and Ramming Mix Specimens, **15.01**
C 180 Discontinued
C 181–82(1987)$^{\epsilon 1}$ Test Method for Workability Index of Fireclay and High-Alumina Plastic Refractories, **15.01**
C 182–88 Test Method for Thermal Conductivity of Insulating Firebrick, **15.01**
C 183–88 Test Method of Sampling and Acceptance of Hydraulic Cement Mortar, **04.01, 04.03**
C 184–83 Test Method for Fineness of Hydraulic Cement by the 150-μm (No. 100) and 75-μm (No. 200) Sieves, **04.01**
C 185–88 Test Method for Air Content of Hydraulic Cement Mortar, **04.01**
C 186–86 Test Method for Heat of Hydration of Hydraulic Cement, **04.01**
C 187–86$^{\epsilon 1}$ Test Method for Normal Consistency of Hydraulic Cement, **04.01**
C 188–89 Test Method for Density of Hydraulic Cement, **04.01**
C 189 Discontinued
C 190–85 Test Method for Tensile Strength of Hydraulic Cement Mortars *(Intent to Withdraw)*, **04.01**
C 191–82 Test Method for Time of Setting of Hydraulic Cement by Vicat Needle, **04.01**
C 192–90a Test Method of Making and Curing Concrete Test Specimens in the Laboratory, **04.02**
C 193 Discontinued
C 194 Discontinued
C 195–90 Specification for Mineral Fiber Thermal Insulating Cement, **04.06**
C 196–87 Specification for Expanded or Exfoliated Vermiculite Thermal Insulating Cement, **04.06**
C 197 Discontinued
C 198–83 Test Method for Cold Bonding Strength of Refractory Mortar, **15.01**
C 199–84 Test Method for Pier Test for Refractory Mortar, **15.01**
C 200 Discontinued—Replaced by C 700
C 201–86$^{\epsilon 1}$ Test Method for Thermal Conductivity of Refractories, **15.01**
C 202–86 Test Method for Thermal Conductivity of Refractory Brick, **15.01**
C 203–85 Test Methods for Breaking Load and Flexural Properties of Block-Type Thermal Insulation, **04.06**
C 204–89 Test Method for Fineness of Portland Cement by Air Permeability Apparatus, **04.01**
C 205 Discontinued—Replaced by C 595
C 206–84(1988)$^{\epsilon 1}$ Specification for Finishing Hydrated Lime, **04.01**
C 207–79(1988)$^{\epsilon 1}$ Specification for Hydrated Lime for Masonry Purposes, **04.01**
C 208–72(1982) Specification for Insulating Board (Cellulosic Fiber), Structural and Decorative, **04.06**
C 209–84 Methods of Testing Insulating Board (Cellulosic Fiber), Structural and Decorative, **04.06**
C 210–85 Test Methods for Reheat Change of Insulating Firebrick, **15.01**
C 211 Discontinued—Replaced by C 700
C 212–60(1986) Specification for Structural Clay Facing Tile, **04.05**
C 213 Discontinued—Combined with C 64
C 214 Discontinued—Replaced by E 96
C 215–85 Test Method for Fundamental Transverse, Longitudinal and Torsional Frequencies of Concrete Specimens, **04.02**
C 216–89 Specification for Facing Brick (Solid Masonry Units Made from Clay or Shale), **04.05**
C 217–85$^{\epsilon 1}$ Test Method for Weather Resistance of Natural Slate, **04.08**
C 218 Discontinued
C 219–90 Definitions of Terms Relating to Hydraulic Cement, **04.01**
C 220–88 Specification for Flat Asbestos-Cement Sheets, **04.05**
C 221–84 Specification for Corrugated Asbestos-Cement Sheets, **04.05**
C 222–78(1984) Specification for Asbestos-Cement Roofing Shingles, **04.05**
C 223–78(1984) Specification for Asbestos-Cement Siding, **04.05**
C 224–78(1989)$^{\epsilon 1}$ Method of Sampling Glass Containers, **15.02**
C 225–85 Test Methods for Resistance of Glass Containers to Chemical Attack, **15.02**
C 226–86 Specification for Air-Entraining Additions for Use in the Manufacture of Air-Entraining Portland Cement, **04.01**
C 227–87 Test Method for Potential Alkali Reactivity of Cement-Aggregate Combinations (Mortar-Bar Method), **04.02**
C 228 Discontinued—Combined with C 114
C 229 Discontinued
C 230–90 Specification for Flow Table for Use in Tests of Hydraulic Cement, **04.01, 04.02, 15.01**
C 231–89a$^{\epsilon 1}$ Test Method for Air Content of Freshly Mixed Concrete by the Pressure Method, **04.02**
C 232–87 Test Method for Bleeding of Concrete, **04.02**
C 233–89 Methods of Testing Air-Entraining Admixtures for Concrete, **04.02**
C 234–86 Test Method for Comparing Concretes on the Basis of the Bond Developed with Reinforcing Steel, **04.02**
C 235 Discontinued—Replaced by C 851
C 236–89 Test Method for Steady-State Thermal Performance of Building Assemblies by Means of a Guarded Hot Box, **04.06, 14.01**
C 237 Discontinued
C 238 Discontinued
C 239 Discontinued
C 240–90 Methods of Testing Cellular Glass Insulating Block, **04.06**
C 241–85$^{\epsilon 1}$ Test Method for Abrasion Resistance of Stone Subjected to Foot Traffic, **04.08**
C 242–89b Terminology of Ceramic Whitewares and Related Products, **15.02**
C 243–85(1989) Test Method for Bleeding of Cement Pastes and Mortars, **04.01**
C 244 Discontinued
C 245 Discontinued
C 246 Discontinued
C 247 Discontinued
C 248 Discontinued
C 249 Discontinued
C 250 Discontinued
C 251 Discontinued
C 252 Discontinued
C 253 Discontinued
C 254 Discontinued
C 255 Discontinued
C 256 Discontinued

D 430-73(1988)$^{\epsilon 1}$ Test Methods for Rubber Deterioration—Dynamic Fatigue, **09.01**
D 431 *Discontinued 1988—Replaced by D 4749:* Method for Designating the Size of Coal from Its Sieve Analysis
D 432 *Discontinued*
D 433 *Discontinued—Replaced by D 2514*
D 434-75 Test Method for Resistance to Slippage of Yarns in Woven Fabrics Using a Standard Seam, **07.01**
D 435 *Discontinued*
D 436 *Discontinued*
D 437 *Discontinued—Replaced by D 1905*
D 438 *Discontinued—Replaced by D 94*
D 439-89 Specification for Automotive Gasoline *(Intent to Withdraw)*, **05.01**
D 440-86 Method for Drop Shatter Test for Coal, **05.05**
D 441-86 Method for Tumbler Test for Coal, **05.05**
D 442 *Discontinued—Replaced by D 476*
D 443 *Discontinued—Replaced by D 477*
D 444-88 Method for Chemical Analysis of Zinc Yellow Pigment (Zinc Chromate Yellow), **06.02**
D 445-88 Test Method for Kinematic Viscosity of Transparent and Opaque Liquids (and the Calculation of Dynamic Viscosity), **05.01, 10.03**
D 446-89a Specification for Operating Instructions for Glass Capillary Kinematic Viscometers, **05.01**
D 447-88 Test Method for Distillation of Plant Spray Oils, **05.01**
D 448-86 Classification for Standard Sizes of Aggregate and Bridge Construction, **04.02, 04.03, 04.08**
D 449-89 Specification for Asphalt Used in Dampproofing and Waterproofing, **04.04**
D 450-89 Specification for Coal-Tar Pitch Used in Roofing, Dampproofing, and Waterproofing, **04.04**
D 451-85 Method for Sieve Analysis of Granular Mineral Surfacing for Asphalt Roofing Products, **04.02, 04.04, 04.08**
D 452-85 Method for Sieve Analysis of Nongranular Mineral Surfacing for Asphalt Roofing Products, **04.02, 04.04, 04.08**
D 453-86 Test Method for Tar Acids in Creosote-Coal Tar Solutions, **04.09**
D 454-88 Test Method for Rubber Deterioration by Heat and Air Pressure, **09.01**
D 455-69(1990)$^{\epsilon 1}$ Specification for Milled Toilet Soap, **15.04**
D 456-85(1990) Specification for Caustic Soda (Anhydrous), **15.04**
D 457-85(1990) Specification for Modified Soda (Sesquicarbonate Type), **15.04**
D 458-85(1990) Specification for Soda Ash, **15.04**
D 459-90 Terminology Relating to Soaps and Other Detergents, **15.04**
D 460-90 Method for Sampling and Chemical Analysis of Soaps and Soap Products, **15.04**
D 461-87 Method of Testing Felt, **07.01**
D 462 *Discontinued*
D 463 *Discontinued—Combined with D 377*
D 464-82(1987)$^{\epsilon 1}$ Test Methods for Saponification Number of Rosin, **06.03**
D 465-82(1987)$^{\epsilon 1}$ Test Methods for Acid Number of Rosin, **06.03**
D 466-42(1989) Method of Testing Films Deposited from Bituminous Emulsions, **04.04**
D 467 *Discontinued—Replaced by D 709*
D 468 *Discontinued—Combined with D 116*
D 469-89 Specification for Natural Rubber Heat-Resisting Insulation for Wire and Cable, 75°C Operation, **10.02**
D 470-82 Method of Testing Crosslinked Insulations and Jackets for Wire and Cable, **10.02**
D 471-79 Test Method for Rubber Property—Effect of Liquids, **09.01**
D 472 *Discontinued—Replaced by D 3992*
D 473-81(1987)$^{\epsilon 1}$ Test Method for Sediment in Crude Oils and Fuel Oils by the Extraction Method, **05.01**
D 474 *Discontinued—Replaced by D 962*
D 475-67(1989) Specification for Pure Para Red Toner Pigment, **06.02**
D 476-84(1989) Specification for Titanium Dioxide Pigments, **06.02**
D 477 *Discontinued*
D 478-86 Specification for Zinc Yellow (Zinc Chromate) Pigment, **06.02**
D 479 *Discontinued*
D 480-88 Test Method for Sampling and Testing of Flaked Aluminum Powders and Pastes, **06.02**
D 481 *Discontinued*
D 482-87$^{\epsilon 1}$ Test Method for Ash from Petroleum Products, **05.01**
D 483-86$^{\epsilon 1}$ Test Method for Unsulfonated Residue of Petroleum Plant Spray Oils, **05.01**
D 484 *Discontinued—Replaced by D 235*
D 485 *Discontinued—Replaced by D 692*
D 486 *Discontinued—Replaced by D 692*
D 487 *Discontinued—Replaced by D 693*
D 488 *Discontinued—Replaced by D 694*
D 489 *Discontinued—Replaced by D 694*
D 490-77(1983)$^{\epsilon 1}$ Specification for Tar, **04.03**
D 491 *Discontinued 1990:* Specification for Asphalt Mastic Used in Waterproofing
D 492 *Discontinued*
D 493 *Discontinued—Replaced by D 2796*
D 494 *Discontinued*
D 495-89 Test Method for High-Voltage, Low-Current, Dry Arc Resistance of Solid Electrical Insulation, **08.01, 10.02**
D 496-74(1990) Specification for Chip Soap, **15.04**
D 497-69(1990) Specification for Ordinary Laundry Bar Soap, **15.04**
D 498-74(1990) Specification for Powdered Soap (Nonalkaline Soap Powder), **15.04**
D 499-69(1990) Specification for White Floating Toilet Soap, **15.04**
D 500-89 Method for Chemical Analysis of Sulfonated and Sulfated Oils, **15.04**
D 501-89 Method for Sampling and Chemical Analysis of Alkaline Detergents, **15.04**
D 502-89 Test Method for Particle Size of Soaps and Other Detergents, **15.04**
D 503 *Discontinued*
D 504 *Discontinued*
D 505 *Discontinued*
D 506 *Discontinued*
D 507 *Discontinued—Replaced by D 1380, D 1453*
D 508 *Discontinued—Replaced by D 1380, D 1454*
D 509-70(1987) Method for Sampling and Grading Rosin, **06.03**
D 510 *Discontinued—Replaced by D 3370*
D 511-88 Test Method for Calcium and Magnesium in Water, **11.01**
D 512-89 Test Methods for Chloride Ion in Water, **11.01**
D 513-88 Test Method for Total and Dissolved Carbon Dioxide in Water, **11.01**
D 514-85(1989) Test Method for Hydroxide Ion in Water, **11.01**
D 515-88 Test Methods for Phosphorus in Water, **11.01**
D 516-88 Test Methods for Sulfate Ion in Water, **11.01**
D 517-70(1981) Specification for Asphalt Plank, **04.03**
D 518-86 Test Method for Rubber Deterioration—Surface Cracking, **09.01**
D 519-90 Test Method for Length of Fiber in Wool Top, **07.01**
D 520-84(1989) Specification for Zinc Dust Pigment, **06.02**
D 521-81 Method for Chemical Analysis of Zinc Dust (Metallic Zinc Powder), **06.02**
D 522-85 Test Method for Elongation of Attached Organic Coatings with Conical Mandrel Apparatus, **06.01**
D 523-89 Test Method for Specular Gloss, **06.01, 08.01**
D 524-88 Test Method for Ramsbottom Carbon Residue of Petroleum Products, **05.01**
D 525-88 Test Method for Oxidation Stability of Gasoline (Induction Period Method), **05.01**
D 526 *Discontinued*
D 527 *Discontinued*
D 528-87 Test Method for Machine Direction of Paper and Paperboard, **15.09**
D 529-82 Recommended Practice for Accelerated Weathering Test of Bituminous Materials, **04.04**
D 530 *Discontinued 1989:* Method of Testing Hard Rubber Products
D 531-89 Test Method for Rubber Property—Pusey & Jones Indentation, **09.01**
D 532-90 Specification for Natural Rubber Jacket for Wire and Cable, **10.02**
D 533-69(1990) Specification for Built Soap, Powdered, **15.04**
D 534-74(1990) Specification for Alkaline Soap Powder, **15.04**
D 535 *Discontinued*
D 536 *Discontinued*
D 537-85(1990) Specification for Sodium Metasilicate, **15.04**
D 538-85(1990) Specification for Trisodium Phosphate, **15.04**
D 539 *Discontinued*
D 540 *Discontinued—Replaced by D 3660*
D 541-87$^{\epsilon 1}$ Specification for Single Jute Yarn, **07.01**
D 542-50(1988)$^{\epsilon 1}$ Test Methods for Index of Refraction of Transparent Organic Plastics, **08.01**
D 543-87 Test Method for Resistance of Plastics to Chemical Reagents, **08.01**
D 544 *Discontinued—Replaced by D 1751, D 1752*
D 545-84 Methods of Testing Preformed Expansion Joint Fillers for Concrete Construction (Nonextruding and Resilient Types), **04.02, 04.03**
D 546-88 Method for Sieve Analysis of Mineral Filler for Road and Paving Materials, **04.03, 04.08**
D 547 *Discontinued*
D 548 *Discontinued*
D 549-74(1982) Test Methods for Rosin in Paper and Paperboard, **15.09**
D 550 *Discontinued*
D 551 *Discontinued*
D 552 *Discontinued—Replaced by D 1055, D 1056*
D 553 *Discontinued—Replaced by D 1084*
D 554 *Discontinued*
D 555-84(1988)$^{\epsilon 1}$ Methods of Testing Drying Oils, **06.03**
D 556 *Discontinued—Replaced by D 1241*
D 557 *Discontinued—Replaced by D 1241*
D 558-82 Test Method for Moisture-Density Relations of Soil-Cement Mixtures, **04.08**
D 559-89 Methods for Wetting-and-Drying Tests of Compacted Soil-Cement Mixtures, **04.08**
D 560-89 Methods for Freezing-and-Thawing Tests of Compacted Soil-Cement Mixtures, **04.08**
D 561-82(1989) Specification for Carbon Black Pigment for Paint, **06.02**
D 562-81(1985) Test Method for Consistency of Paints Using the Stormer Viscometer, **06.01**
D 563-80 Test Method for Phthalic Anhydride Content of Alkyd Resins and Resin Solutions, **06.02**
D 564-87 Method of Testing Liquid Paint Driers, **06.03**
D 565-88 Test Method for Carbonizable Substances in White Mineral Oil (Liquid Petrolatum), **05.01**

D 1436-87$^{\epsilon 1}$ Method for Application of Emulsion Floor Polishes to Substrates for Testing Purposes, **15.04**
D 1437 Discontinued
D 1438 Discontinued—Replaced by D 1787
D 1439-83a(1989)$^{\epsilon 1}$ Methods of Testing Sodium Carboxymethylcellulose, **06.02**
D 1440-90 Test Method for Length and Length Distribution of Cotton Fibers (Array Method), **07.01**
D 1441-87 Practice for Sampling Cotton Fibers for Testing, **07.01**
D 1442-80 Test Method for Maturity of Cotton Fibers (Sodium Hydroxide Swelling and Polarized Light Procedures), **07.01**
D 1443 Discontinued—Replaced by D 1442
D 1444 Discontinued
D 1445-90 Test Method for Breaking Strength and Elongation of Cotton Fibers (Flat Bundle Method), **07.01**
D 1446 Discontinued
D 1447-89 Test Method for Length and Length Uniformity of Cotton Fibers by Fibrograph Measurement, **07.01**
D 1448-90 Test Method for Micronaire Reading of Cotton Fibers, **07.01**
D 1449 Discontinued
D 1450 Discontinued
D 1451 Discontinued—Replaced by D 2812
D 1452-80 Practice for Soil Investigation and Sampling by Auger Borings, **04.08**
D 1453 Discontinued—Replaced by D 2645
D 1454 Discontinued—Replaced by D 2644 and D 2645
D 1455-87 Test Method for 60-deg Specular Gloss of Emulsion Floor Polish, **15.04**
D 1456-86 Test Method for Rubber Property—Elongation at Specific Stress, **09.01**
D 1457-88 Specification for PTFE Molding and Extrusion Materials, **08.01**
D 1458-84 Methods of Testing Fully Cured Silicone Rubber-Coated Glass Fabric and Tapes for Electrical Insulation, **10.01**
D 1459-88 Specification for Silicone Varnished Glass Cloth and Tape for Electrical Insulation, **10.01**
D 1460-86 Test Method for Rubber Property—Change in Length During Liquid Immersion, **09.01**
D 1461-85 Test Method for Moisture or Volatile Distillates in Bituminous Paving Mixtures, **04.03**
D 1462-87 Specification for Refined Soybean Oil, **06.03**
D 1463 Discontinued 1989: Specification for Biaxially Oriented Styrene Plastics Sheet
D 1464-90 Test Method for Differential Dyeing Behavior of Cotton, **07.01**
D 1465-80(1985)$^{\epsilon 1}$ Test Method for Blocking and Picking Points of Petroleum Wax, **05.01, 15.09**
D 1466-86 Methods for Sampling Liquid Oils, Fatty Acids, and Polymerized Fatty Acids Commonly Used in Paints, Varnishes, and Related Materials, **06.03**
D 1467-89 Guide for Testing Fatty Acids Used in Protective Coatings, **06.03**
D 1468-84(1988)$^{\epsilon 1}$ Test Method for Volatile Matter in Tricresyl Phosphate, **06.03**
D 1469-73(1988)$^{\epsilon 1}$ Test Method for Total Rosin Acids Content of Coating Vehicles, **06.02**
D 1470 Discontinued—Replaced by D 1905
D 1471 Discontinued
D 1472 Discontinued
D 1473 Discontinued
D 1474-85 Test Methods for Indentation Hardness of Organic Coatings, **06.01**
D 1475-85 Test Method for Density of Paint, Varnish, Lacquer, and Related Products, **06.01**
D 1476-88 Test Method for Heptane Miscibility of Lacquer Solvents, **06.03**
D 1477 Discontinued—Replaced by D 2386
D 1478-80(1985)$^{\epsilon 1}$ Test Method for Low-Temperature Torque of Ball Bearing Greases, **05.01**
D 1479 Discontinued
D 1480-81 Test Method for Density and Relative Density (Specific Gravity) of Viscous Materials by Bingham Pycnometer, **05.01**
D 1481-81 Test Method for Density and Relative Density (Specific Gravity) of Viscous Materials by Lipkin Bicapillary Pycnometer, **05.01, 10.03**
D 1482 Discontinued—Combined with D 2244
D 1483-84(1989)$^{\epsilon 1}$ Test Method for Oil Absorption of Pigments by Gardner-Coleman Method, **06.02**
D 1484 Discontinued—Replaced by D 2240
D 1485-86 Method for Rubber for Natural Sources—Sampling and Sample Preparation, **09.01**
D 1486 Discontinued
D 1487 Discontinued—Replaced by D 1905
D 1488-86 Test Method for Amylaceous Matter in Adhesives, **15.06**
D 1489-86(1987) Test Method for Nonvolatile Content of Aqueous Adhesives, **15.06**
D 1490-82(1987) Test Method for Nonvolatile Content of Urea-Formaldehyde Resin Solutions, **15.06**
D 1491 Discontinued
D 1492-87 Test Method for Bromine Index of Aromatic Hydrocarbons by Coulometric Titration, **06.03**
D 1493-84(1988) Test Method for Solidification Point of Industrial Organic Chemicals, **06.03**
D 1494-88 Test Method for Diffuse Light Transmission Factor of Reinforced Plastics Panels, **08.04**
D 1495 Discontinued—Combined with D 2244
D 1496 Discontinued—Replaced by D 3370
D 1497 Discontinued—Combined with D 1068
D 1498-76(1981)$^{\epsilon 2}$ Practice for Oxidation-Reduction Potential of Water, **11.01**
D 1499-84 Recommended Practice for Operating Light- and Water-Exposure Apparatus (Carbon-Arc Type) for Exposure of Plastics, **08.01**
D 1500-87 Test Method for ASTM Color of Petroleum Products (ASTM Color Scale), **05.01, 10.03**
D 1501 Discontinued
D 1502 Discontinued
D 1503 Discontinued
D 1504 Discontinued 1989: Recommended Practice for Determining Orientation Release Stress of Plastic Sheeting
D 1505-85 Test Method for Density of Plastics by the Density-Gradient Technique, **08.01**
D 1506-90 Test Method for Carbon Black—Ash Content, **09.01**
D 1507 Discontinued
D 1508-89 Test Method for Carbon Black, Pelleted—Fines Content, **09.01**
D 1509-88 Test Method for Carbon Black—Heating Loss, **09.01**
D 1510-89 Test Method for Carbon Black—Iodine Adsorption Number, **09.01**
D 1511-89a Test Method for Carbon Black—Pellet Size Distribution, **09.01**
D 1512-90 Test Method for Carbon Black—pH Value, **09.01**
D 1513-89 Test Method for Carbon Black, Pelleted—Pour Density, **09.01**
D 1514-89a Test Method for Carbon Black—Sieve Residue, **09.01**
D 1515 Discontinued
D 1516-84 Test Method for Width of Leather, **15.04**
D 1517-80(1987) Definitions of Terms Relating to Leather, **15.04**
D 1518-85 Test Method for Thermal Transmittance of Textile Material, **07.01**
D 1519-88 Test Method for Rubber Chemicals—Melting Range, **09.01**
D 1520 Discontinued—Replaced by D 1679
D 1521 Discontinued
D 1522 Discontinued—Combined with D 15
D 1523-89 Method for Synthetic Rubber Insulation for Wire and Cable, 90°C Operation, **10.02**
D 1524-84(1990)$^{\epsilon 1}$ Method for Visual Examination of Used Electrical Insulating Oils of Petroleum Origin in the Field, **10.03**
D 1525-87 Test Method for Vicat Softening Temperature of Plastics, **08.01**
D 1526 Discontinued
D 1527-89 Specification for Acrylonitrile-Butadiene-Styrene(ABS) Plastic Pipe, Schedules 40 and 80, **08.04**
D 1528 Discontinued
D 1529 Discontinued
D 1530 Discontinued—Combined with D 882
D 1531-90 Test Method for Relative Permittivity (Dielectric Constant) and Dissipation Factor of Polyethylene by Liquid Displacement Procedure, **10.02**
D 1532-88 Specification for Polyester Glass-Mat Sheet Laminate, **10.01**
D 1533-88 Test Method for Water in Insulating Liquids (Karl Fischer Method), **10.03**
D 1534-90 Test Method for Approximate Acidity in Electrical Insulating Liquids by Color-Indicator Titration, **10.03**
D 1535-89 Method for Specifying Color by the Munsell System, **06.01, 15.09**
D 1536 Discontinued—Combined with D 2244
D 1537-60(1988)$^{\epsilon 1}$ Specification for Distilled Soybean Fatty Acids, **06.03**
D 1538-60(1988)$^{\epsilon 1}$ Specification for Distilled Linseed Fatty Acids, **06.03**
D 1539-60(1988)$^{\epsilon 1}$ Specification for Dehydrated Castor Acids, **06.03**
D 1540-82(1987)$^{\epsilon 1}$ Test Method for Effect of Staining Agents on Organic Finishes Used in the Transportation Industry, **06.01**
D 1541-86 Test Method for Total Iodine Value of Drying Oils and Their Derivatives, **06.03**
D 1542-60(1988)$^{\epsilon 1}$ T Test Method for Qualitative Detection of Rosin in Varnishes, **06.01, 06.02**
D 1543-86 Test Method for Color Permanence of White Architectural Enamels, **06.01**
D 1544-80(1989)$^{\epsilon 1}$ Test Method for Color of Transparent Liquids (Gardner Color Scale), **06.01, 06.02, 06.03**
D 1545-89 Test Method for Viscosity of Transparent Liquids by Bubble Time Method, **06.01, 06.02, 06.03**
D 1546-62(1987) Methods for Performance Tests of Clear Floor Sealers, **06.01**
D 1547 Discontinued 1990: Specification for Extruded Acrylic Plastic Sheet
D 1548-83$^{\epsilon 1}$ Test Method for Vanadium in Navy Special Fuel Oil, **05.01**
D 1549 Discontinued
D 1550-89 ASTM Butadiene Measurement Tables, **05.01**
D 1551 Discontinued
D 1552-88 Test Method for Sulfur in Petroleum Products (High-Temperature Method), **05.01**
D 1553-83 Methods for Analysis of Graphites Used as Lubricants *(Intent to Withdraw)*, **05.01**
D 1554-86 Definitions of Terms Relating to Wood-Base Fiber and Particle Panel Materials, **04.09**
D 1555-83 Method for Calculation of Volume and Weight of Industrial Aromatic Hydrocarbons, **05.01, 06.03**
D 1556-82$^{\epsilon 1}$ Test Method for Density of Soil in Place by the Sand-Cone Method, **04.08**
D 1557-78$^{\epsilon 1}$ Test Methods for Moisture-Density Relations of Soils and Soil-Aggregate Mixtures Using 10-lb (4.54-kg) Rammer and 18-in. (457-mm) Drop, **04.08**

D 1900-90 Practice for Carbon Black—Sampling Bulk Shipments, **09.01**
D 1901-85 Test Method for Relative Evaporation Time of Halogenated Organic Solvents and Their Admixtures, **15.05**
D 1902 Discontinued
D 1903-88 Test Method for Coefficient of Thermal Expansion of Electrical Insulating Liquids of Petroleum Origin, and Askarels, **10.03**
D 1904 Discontinued
D 1905 Discontinued
D 1906 Discontinued
D 1907-89 Test Method for Yarn Number by the Skein Method, **07.01**
D 1908-89 Test Method for Needle-Related Damage Due to Sewing in Woven Fabrics, **07.01**
D 1909-86 Table of Commercial Moisture Regains for Textile Fibers, **07.01**
D 1910 Discontinued—Replaced by D 3773, D 3774, D 3775, D 3776, D 3882, and D 3883
D 1911 Discontinued
D 1912-69(1984) Test Method for Cold-Crack Resistance of Upholstery Leather, **15.04**
D 1913-63(1988) Test Method for Resistance to Wetting of Garment-Type Leathers (Spray Test), **15.04**
D 1914-68(1983)$^{\epsilon 1}$ Recommended Practice for Conversion Units and Factors Relating to Atmospheric Analysis, **11.03**
D 1915-63(1989)$^{\epsilon 1}$ Test Method for Chromatographic Analysis of Chemically Refined Cellulose, **06.02**
D 1916-88 Test Method for Penetration of Adhesives, **15.06**
D 1917-84(1989)$^{\epsilon 1}$ Test Method for Rubber Property in Shrinkage of Raw and Compounded Styrene-Butadiene Rubber, **09.01**
D 1918 Discontinued 1989: Test Method for Asbestos Content of Asbestos Textiles
D 1919 Discontinued
D 1920 Discontinued
D 1921-89 Test Method for Particle Size (Sieve Analysis) of Plastic Materials, **08.02**
D 1922-89 Test Method for Propagation Tear Resistance of Plastic Film and Thin Sheeting by Pendulum Method, **08.02**
D 1923 Discontinued
D 1924 Redesignated G 21
D 1925-70(1988)$^{\epsilon 1}$ Test Method for Yellowness Index of Plastics, **08.02**
D 1926-89 Test Methods for Carboxyl Content of Cellulose, **06.02**
D 1927-81(1988)$^{\epsilon 1}$ Specification for Rigid Poly(Vinyl Chloride) Plastic Sheet, **08.02**
D 1928-80(1988)$^{\epsilon 1}$ Test Method for Preparation of Compression-Molded Polyethylene Test Sheets and Test Specimens, **08.02**
D 1929-77(1985) Test Method for Ignition Properties of Plastics, **08.02**
D 1930 Discontinued
D 1931-79(1989)$^{\epsilon 1}$ Specification for Fully Cured Silicone Rubber-Coated Glass Fabric and Tapes for Electrical Insulation, **10.01**
D 1932-85(1989) Test Method for Thermal Endurance of Flexible Electrical Insulating Varnishes, **10.01**
D 1933-84(1989) Specification for Nitrogen Gas as an Electrical Insulating Material, **10.03**
D 1934-89a Method for Oxidative Aging of Electrical Insulating Petroleum Oils by Open-Beaker Method, **10.03**
D 1935 Discontinued
D 1936 Discontinued
D 1937-89 Methods of Testing Carbon Black, Pelleted—Mass Strength, **09.01**
D 1938-85 Test Method for Tear Propagation Resistance of Plastic Film and Thin Sheeting by a Single-Tear Method, **08.02**
D 1939-84(1989) Practice for Determining Residual Stresses in Extruded or Molded Acrylonitrile-Butadiene-Styrene (ABS) Parts by Immersion in Glacial Acetic Acid, **08.02**
D 1940 Discontinued
D 1941-67(1975)$^{\epsilon 2}$ Method for Open Channel Flow Measurement of Water and Waste Water by the Parshall Flume, **11.01**
D 1942 Discontinued 1990 (Replaced by D 4983): Test Method for Morpholine in Water
D 1943-81$^{\epsilon 1}$ Test Method for Alpha Particle Radioactivity of Water, **11.02, 12.01**
D 1944 Discontinued
D 1945-81 Method for Analysis of Natural Gas by Gas Chromatography, **05.05**
D 1946-90 Method for Analysis of Reformed Gas by Gas Chromatography, **05.05**
D 1947-83 Test Method for Load-Carrying Capacity of Petroleum Oil and Synthetic Fluid Gear Lubricants, **05.01**
D 1948 Discontinued—Replaced by D 2700
D 1949-79(1984)$^{\epsilon 1}$ Test Method for Separation of Tetraethyllead and Tetramethyllead in Gasoline, **05.02**
D 1950-86 Test Method for Acetone Tolerance of Heat-Bodied Drying Oils, **06.03**
D 1951-86 Test Method for Ash in Drying Oils and Fatty Acids, **06.03**
D 1952-86 Test Method for Break in Drying Oils, Quantitative, **06.03**
D 1953 Discontinued—Replaced by D 1640
D 1954-86 Test Method for Foots in Raw Linseed Oil (Volumetric Method), **06.03**
D 1955-85(1989)$^{\epsilon 1}$ Test Method for Gel Time of Drying Oils, **06.03**
D 1956 Discontinued—Replaced by D 555
D 1957-86 Test Method for Hydroxyl Value of Fatty Oils and Acids, **06.03**
D 1958-86 Test Method for Matter Insoluble in Chloroform in Oiticica Oil, **06.03**
D 1959-85(1989)$^{\epsilon 1}$ Test Method for Iodine Value of Drying Oils and Fatty Acids, **06.03**
D 1960-86 Test Method for Loss on Heating of Drying Oils, **06.03**
D 1961 Discontinued—Replaced by D 1358
D 1962-85(1989)$^{\epsilon 1}$ Test Method for Saponification Value of Drying Oils, Fatty Acids and Polymerized Fatty Acids, **06.03**
D 1963-85(1989)$^{\epsilon 1}$ Test Method for Specific Gravity of Drying Oils, Varnishes, Resins, and Related Materials at 25/25°C, **06.03**
D 1964-85(1989)$^{\epsilon 1}$ Test Method for Tung Oil Quality, **06.03**
D 1965-87 Test Method for Unsaponifiable Matter in Drying Oils, Fatty Acids, and Polymerized Fatty Acids, **06.03**
D 1966-69(1987) Test Method for Foots in Raw Linseed Oil (Gravimetric Method), **06.03**
D 1967-86 Test Method for Color After Heating of Drying Oils, **06.03**
D 1968 Not yet assigned
D 1969 Not yet assigned
D 1970 Not yet assigned
D 1971 Not yet assigned
D 1972 Not yet assigned
D 1973 Not yet assigned
D 1974 Not yet assigned
D 1975 Not yet assigned
D 1976 Not yet assigned
D 1977 Not yet assigned
D 1978 Not yet assigned
D 1979 Not yet assigned
D 1980-87 Test Method for Acid Value of Fatty Acids and Polymerized Fatty Acids, **06.03**
D 1981-86 Test Method for Color After Heating of Fatty Acids, **06.03**
D 1982-85(1989)$^{\epsilon 1}$ Test Method for Titer of Fatty Acids, **06.03**
D 1983-75(1980)$^{\epsilon 1}$ Test Method for Fatty Acid Composition by Gas-Liquid Chromatography of Methyl Esters, **06.03**
D 1984-69(1988) Specification for Tall Oil Fatty Acids, **06.03**
D 1985 Not yet assigned
D 1986 Not yet assigned
D 1987 Not yet assigned
D 1988 Not yet assigned
D 1989 Not yet assigned
D 1990 Not yet assigned
D 1991 Not yet assigned
D 1992 Not yet assigned
D 1993 Not yet assigned
D 1994 Not yet assigned
D 1995 Not yet assigned
D 1996 Not yet assigned
D 1997 Not yet assigned
D 1998 Not yet assigned
D 1999 Not yet assigned
D 2000-86 Classification System for Rubber Products in Automotive Applications, **09.01, 09.02**
D 2001-86 Test Method for Dependanization of Gasoline and Naphthas, **05.02**
D 2002-86 Method for Isolation of Representative Saturates Fraction from Low-Olefinic Petroleum Naphthas, **05.02**
D 2003-86 Method for Isolation of Representative Saturates Fraction from High-Olefinic Petroleum Naphthas, **05.02**
D 2004 Discontinued
D 2005 Discontinued
D 2006 Discontinued
D 2007-86 Test Method for Characteristic Groups in Rubber Extender and Processing Oils by the Clay Gel Adsorption Chromatographic Method, **05.02, 09.01, 10.03**
D 2008-85 Test Method for Ultraviolet Absorbance and Absorptivity of Petroleum Products, **05.02**
D 2009-65(1990) Recommended Practice for Collection by Filtration and Determination of Mass, Number, and Optical Sizing of Atmospheric Particulates, **11.03**
D 2010-85(1990) Method for Evaluation of Total Sulfation Activity in the Atmosphere by the Lead Dioxide Candle, **11.03**
D 2011 Discontinued
D 2012 Discontinued
D 2013-86 Method for Preparing Coal Samples for Analysis, **05.05**
D 2014-90 Test Method for Expansion or Contraction of Coal by the Sole-Heated Oven, **05.05**
D 2015-85 Test Method for Gross Calorific Value of Solid Fuel by the Adiabatic Bomb Calorimeter, **05.05**
D 2016 Discontinued 1989: Replaced by D 4442 and D 4444
D 2017-81(1986) Method for Accelerated Laboratory Test of Natural Decay Resistance of Woods, **04.09**
D 2018 Discontinued
D 2019 Discontinued
D 2020 Discontinued
D 2021-65(1990) Specification for Neutral Detergent, 40 Percent Alkylbenzene Sulfonate Type, **15.04**
D 2022-89 Method for Sampling and Chemical Analysis of Chlorine-Containing Bleaches, **15.04**
D 2023-89 Test Method for Analysis for Sodium Toluene Sulfonate in Detergents, **15.04**

D 3112 Discontinued 1990: Test Method for Lead in the Atmosphere by Colorimetric Dithizone Procedure
D 3113–87 Test Methods for Tetrasodium Salt of EDTA in Water, **11.02**
D 3114 Discontinued—Replaced by D 4308
D 3115–86 Test Method for Explosive Reactivity of Lubricants with Aerospace Alloys Under High Shear, **05.02**
D 3116–89 Test Method for Trace Amounts of Lead in Gasoline, **05.02**
D 3117–87$^{\epsilon 1}$ Test Method for Wax Appearance Point of Distillate Fuels, **05.02**
D 3118 Not yet assigned
D 3119 Discontinued 1990: Test Method for Mist Spray Flammability of Hydraulic Fluids
D 3120–87$^{\epsilon 1}$ Test Method for Trace Quantities of Sulfur in Light Liquid Petroleum Hydrocarbons by Oxidative Microcoulometry, **05.02**
D 3121–89$^{\epsilon 1}$ Test Method for Tack of Pressure-Sensitive Adhesives by Rolling Ball, **15.06**
D 3122–89 Specification for Solvent Cements for Styrene-Rubber Plastic Pipe and Fittings, **08.04**
D 3123–72(1988) Test Method for Spiral Flow of Low-Pressure Thermosetting Molding Compounds, **08.03**
D 3124–72(1988) Test Method for Vinylidene Unsaturation in Polyethylene by Infrared Spectrophotometry, **08.03**
D 3125–83(1987) Test Method for Monomethyl Ether of Hydroquinone in Colorless Monomeric Acrylic Esters and Acrylic Acid, **06.03**
D 3126 Discontinued—Replaced by D 4615
D 3127 Discontinued—Replaced by D 4614
D 3128–89 Specification for 2-Methoxyethanol, **05.02, 06.03**
D 3129–85$^{\epsilon 1}$ Recommended Practices for Testing Exterior Latex House Paints, **06.01**
D 3130–86 Specification for Normal Propyl Acetate (90 to 92 Percent Grade), **06.03**
D 3131–88 Specification for Isopropyl Acetate (99 Percent Grade), **06.03**
D 3132–84$^{\epsilon 1}$ Test Method for Solubility Range of Resins and Polymers, **06.02**
D 3133–72(1989)$^{\epsilon 1}$ Method for Quantitative Determination of Cellulose Nitrate in Alkyd Lacquers by Infrared Spectrophotometry, **06.01**
D 3134–89 Recommended Practice for Selecting and Defining Color and Gloss Tolerances of Opaque Materials and for Evaluating Conformance, **06.01**
D 3135–87 Specification for Performance of Bonded and Laminated Apparel Fabrics, **07.01**
D 3136–88 Definitions of Terms Relating to Care of Consumer Textile Products and Recommended Practice for Use of These Terms on Permanently Attached Labels, **07.01**
D 3137–81(1987) Test Method for Rubber Property—Hydrolytic Stability, **09.01**
D 3138–90 Specification for Solvent Cements for Transition Joints Between Acrylonitrile-Butadiene-Styrene (ABS) and Poly(Vinyl Chloride) (PVC) Non-Pressure Piping Components, **08.04**
D 3139–89 Specification for Joints for Plastic Pressure Pipes Using Flexible Elastomeric Seals, **08.04**
D 3140–85 Recommended Practice for Flaring Polyolefin Pipe and Tubing, **08.04**
D 3141–80(1986) Specification for Asphalt for Undersealing Portland Cement Concrete Pavements, **04.03**
D 3142–84(1989) Test Method for Specific Gravity or API Gravity of Liquid Asphalts by Hydrometer Method, **04.03**
D 3143–83(1989) Test Method for Flash Point of Cutback Asphalt with Tag Open-Cup Apparatus, **04.03**
D 3144–90 Specification for Poly(Vinylidene Fluoride) Heat-Shrinkable Tubing for Electrical Insulation, **10.01**
D 3145–88 Test Method for Thermal Degradation of Electrical Insulating Varnishes by the Helical Coil Method, **10.01**
D 3146 Discontinued—Replaced by D 3487
D 3147–89 Method of Testing Stop Leak Additives for Engine Coolants, **15.05**
D 3148–86$^{\epsilon 1}$ Test Method for Elastic Moduli of Intact Rock Core Specimens in Uniaxial Compression, **04.08**
D 3149–90 Specification for Crosslinked Polyolefin Heat-Shrinkable Tubing for Electrical Insulation, **10.01**
D 3150–90 Specification for Crosslinked and Noncrosslinked Poly(Vinyl Chloride) Heat-Shrinkable Tubing for Electrical Insulation, **10.01**
D 3151–88 Test Method for Thermal Failure Under Electric Stress of Solid Electrical Insulating Materials, **10.02**
D 3152–72(1977)$^{\epsilon 1}$ Test Method for Capillary-Moisture Relationships for Fine-Textured Soils by Pressure-Membrane Apparatus, **04.08**
D 3153–87 Test Method for Recoatability of Water-Emulsion Floor Polishes, **15.04**
D 3154–72 Test Method for Average Velocity in a Duct (Pitot Tube Method), **11.03**
D 3155–83 Test Method for Lime Content of Uncured Soil-Lime Mixtures, **04.08**
D 3156–81 Recommended Practice for Rubber—Chromatographic Analysis of Antidegradants (Stabilizers, Antioxidants, and Antiozonants), **09.01**
D 3157–84(1990) Method of Testing Rubber from Natural Sources—Color, **09.01**
D 3158 Discontinued
D 3159–89 Specification for Modified ETFE-Fluoropolymer Molding and Extrusion Materials, **08.03**
D 3160 Not yet assigned
D 3161–81(1986)$^{\epsilon 1}$ Test Method for Wind-Resistance of Asphalt Shingles, **04.04**
D 3162–88 Test Method for Carbon Monoxide in the Atmosphere (Continuous Measurement by Nondispersive Infrared Spectrometry), **11.03**
D 3163–73(1984)$^{\epsilon 1}$ Recommended Practice for Determining the Strength of Adhesively Bonded Rigid Plastic Lap-Shear Joints in Shear by Tension Loading, **15.06**
D 3164–73(1984)$^{\epsilon 1}$ Recommended Practice for Determining the Strength of Adhesively Bonded Plastic Lap-Shear Sandwich Joints in Shear by Tension Loading, **15.06**
D 3165–73(1979)$^{\epsilon 1}$ Test Method for Strength Properties of Adhesives in Shear by Tension Loading of Laminated Assemblies, **15.06**
D 3166–73(1979) Test Method for Fatigue Properties of Adhesives in Shear by Tension Loading (Metal/Metal), **15.06**
D 3167–76(1986) Test Method for Floating Roller Peel Resistance of Adhesives, **15.06**
D 3168–85 Recommended Practice for Qualitative Identification of Polymers in Emulsion Paints, **06.01**
D 3169–89 Specification for Once-Refined Sunflower Oil, Technical Grade, **06.03**
D 3170–87 Test Method for Chip Resistance of Coatings, **06.01**
D 3171–76(1990)$^{\epsilon 1}$ Test Method for Fiber Content of Resin-Matrix Composites by Matrix Digestion, **15.03**
D 3172–89 Practice for Proximate Analysis of Coal and Coke, **05.05**
D 3173–87$^{\epsilon 1}$ Test Method for Moisture in the Analysis Sample of Coal and Coke, **05.05**
D 3174–89 Test Method for Ash in the Analysis Sample of Coal and Coke from Coal, **05.05**
D 3175–89a Test Method for Volatile Matter in the Analysis Sample of Coal and Coke, **05.05**
D 3176–89 Practice for Ultimate Analysis of Coal and Coke, **05.05**
D 3177–89 Test Method for Total Sulfur in the Analysis Sample of Coal and Coke, **05.05**
D 3178–89 Test Method for Carbon and Hydrogen in the Analysis Sample of Coal and Coke, **05.05**
D 3179–89 Test Method for Nitrogen in the Analysis Sample of Coal and Coke, **05.05**
D 3180–89 Practice for Calculating Coal and Coke Analyses from As-Determined to Different Bases, **05.05**
D 3181–89 Practice for Conducting Wear Testing on Textile Garments, **07.01**
D 3182–89 Recommended Practice for Rubber—Materials, Equipment, and Procedures for Mixing Standard Compounds and Preparing Standard Vulcanized Sheets, **09.01**
D 3183–84(1988)$^{\epsilon 1}$ Practice for Rubber—Preparation of Pieces for Test Purposes from Products, **09.01**
D 3184–89 Test Methods for Rubber—Evaluation of NR (Natural Rubber), **09.01**
D 3185–87 Methods for Rubber—Evaluation of SBR (Styrene-Butadiene Rubber) Including Mixtures with Oil, **09.01**
D 3186–90 Methods for Rubber—Evaluation of SBR (Styrene-Butadiene Rubber) Mixed with Carbon Black or Carbon Black and Oil, **09.01**
D 3187–90 Methods for Rubber—Evaluation of NBR (Acrylonitrile-Butadiene Rubber), **09.01**
D 3188–87$^{\epsilon 1}$ Methods for Rubber—Evaluation of IIR (Isobutene-Isoprene Rubber), **09.01**
D 3189–85 Methods for Rubber—Evaluation of Solution BR (Polybutadiene Rubber), **09.01**
D 3190–90 Methods for Rubber—Evaluation of General-Purpose CR (Chloroprene Rubber), **09.01**
D 3191–89 Test Methods for Carbon Black Evaluation in SBR (Styrene-Butadiene-Rubber) **09.01**
D 3192–89 Test Methods for Carbon Black in NR (Natural Rubber) **09.01**
D 3193 Not yet assigned
D 3194–84 Methods of Testing Rubber from Natural Sources—Plasticity Retention Index (PRI), **09.01**
D 3195–73(1985)$^{\epsilon 1}$ Practice for Rotameter Calibration, **11.03**
D 3196 Discontinued—Replaced by D 412
D 3197 Discontinued
D 3198–84 Test Method for Measuring Application and Removal Torque of Threaded or Lug-Style Closures, **15.09**
D 3199–84 Test Method for Water Vapor Transmission Through Screw-Cap Closure Liners, **15.09**
D 3200–74(1986) Specification and Methods for Establishing Recommended Design Stresses for Round Timber Construction Poles, **04.09**
D 3201–86 Test Method for Hygroscopic Properties of Fire-Retardant Wood and Wood-Base Products, **04.09**
D 3202–83 Recommended Practice for Preparation of Bituminous Mixture Beam Specimens by Means of the California Kneading Compactor, **04.03**
D 3203–88 Test Method for Percent Air Voids in Compacted Dense and Open Bituminous Paving Mixtures, **04.03**
D 3204–86 Specification for Preformed Cellular Plastic Joint Fillers for Relieving Pressure, **04.03**
D 3205–86 Test Method for Viscosity of Asphalt with Cone and Plate Viscometer, **04.03**
D 3206–87 Test Method for Soil Resistance of Floor Polishes, **15.04**
D 3207–87 Test Method for Detergent Resistance of Floor Polish Films, **15.04**
D 3208–86 Specification for Manifold Papers for Permanent Records, **15.09**
D 3209–87 Test Method for Freeze/Thaw Resistance of Liquid Water Emulsion Floor Polishes, **15.04**

F 1165–88 Test Method for Measuring Angular Displacement of Multiple Images in Transparent Parts, **15.03**
F 1166–88 Practice for Human Engineering Design for Marine Systems, Equipment and Facilities, **01.07**
F 1167–89 Definitions of Terms Relating to Aseptic Packaging, **15.09**
F 1168–88 Guide for Use in the Establishment of Thermal Processes for Foods Packaged in Flexible Containers, **15.09**
F 1169–88 Specification for Full Size Baby Crib Testing, **15.07**
F 1170–88 Practice for Determining Performance of a Filter Medium Using Water and Siliceous Particles, **14.02**
F 1171 Not yet assigned
F 1172–88 Specification for Fuel Oil Meters of the Volumetric Positive Displacement Type, **01.07**
F 1173–88 Specification for Epoxy Resin Fiberglass Pipe and Fittings to Be Used for Marine Applications, **01.07**
F 1174–88 Practice for the Use of the PC Impact Printer as a Test Instrument, **15.09**
F 1175–88$^{\epsilon 1}$ Practice for Using the Computer Impact Print-Out Unit as a Test Instrument for Manifold Comparison, **15.09**
F 1176–88 Practice for Design and Installation of Thermoplastic Irrigation Systems with Maximum Working Pressure of 63 psi, **08.04**
F 1177–90b Terminology Relating to Emergency Medical Services, **13.01**
F 1178–88 Specification for Enameling System, Baking, Metal Joiner Work and Furniture, **01.07**
F 1179–88 Practice for Inspection Procedure for Use of Anaerobic Thread Locking Compounds with Studs, **01.07**
F 1180 Not yet assigned
F 1181–88 Test Method for Measuring Binocular Disparity in Transparent Parts, **15.03**
F 1182–88 Specification for Anodes, Corrosion Preventative, Zinc: Slab, Plate, Disk, and Rod-Shaped, **01.07**
F 1183–88 Specification for Aluminum Alloy Chain Link Fence Fabric, **01.06**
F 1184–88 Specification for Industrial and Commercial Horizontal Slide Gates, **01.06**
F 1185–88 Specification for Composition of Ceramic Hydroxylapatite for Surgical Implants, **13.01**
F 1186–88 Classification System for Chemicals According to Functional Groups, **15.07**
F 1187 Not yet assigned
F 1188–88 Test Method for Interstitial Atomic Oxygen Content of Silicon by Infrared Absorption, **10.05**
F 1189–88 Test Method for Using Computer-Assisted Infrared Spectrophotometry to Measure the Interstitial Oxygen Content of Silicon Slices Polished on Both Sides, **10.05**
F 1190–88 Practice for Neutron Irradiation of Unbiased Electronic Components, **10.04**
F 1191–88 Guide for Radiation Testing of Semiconductor Memories, **10.04**
F 1192–90 Guide for Measurement of Single Event Phenomena from Heavy Iron Irradiation of Semiconductor Devices, **10.04**
F 1193–88 Practice for an Amusement Ride and Device Manufacturer's Quality Assurance Program, **15.07**
F 1194–89 Guide for Documenting the Results of Chemical Permeation Testing on Protective Clothing Materials, **15.07**
F 1195–88 Specification for Rigid Laryngoscopes for Tracheal Intubation, **13.01**
F 1196–89 Specification for Sliding Watertight Door Assemblies, **01.07**
F 1197–89 Specification for Sliding Watertight Door Control Systems, **01.07**
F 1198–89 Guide for Shipboard Fire Detection Systems, **01.07**
F 1199–88 Specification for Cast and Welded Pipe Line Strainers, **01.07**
F 1200–88 Specification for Fabricated (Welded) Pipe Line Strainers, **01.07**
F 1201–88 Specification for Fluid Conditioner Fittings in Piping Applications Above 0°F, **01.07**
F 1202–88 Specification for Washing Machines Heat Sanitizing, Commercial, Pot, Pan, and Utensil, Vertically Oscillating Arm Type, **15.07**
F 1203–88 Specification for Washing Machines, Pot, Pan, and Utensil, Heat Sanitizing, Commercial Rotary Conveyor Type, **15.07**
F 1204–88 Specification for Anesthesia Reservoir Bags, **13.01**
F 1205–88 Specification for Anesthesia Breathing Tubes, **13.01**
F 1206–88 Test Method for Evaluating Color Image Output from Color Printers and Copiers, **15.09**
F 1207–89 Specification for Electrical Insulation for Monitoring Ground Resistance in Active Electrical Systems, **01.07**
F 1208–89 Specification for Minimum Performance and Safety Requirements for Anesthesia Breathing Systems, **13.01**
F 1209–89 Guide for Ecological Considerations for Use of Oilspill Dispersants in Freshwater and Other Inland Environments, Ponds, and Sloughs, **11.04**
F 1210–89 Guide for Ecological Considerations for Use of Oilspill Dispersants in Freshwater and Other Inland Environments, Lakes, and Large Water Bodies, **11.04**
F 1211–89 Specification for Semiconductor Device Passivation Opening Layouts, **10.04**
F 1212–89 Test Method for Thermal Stability Testing of Gallium Arsenide Wafers, **10.05**
F 1213–89 Test Method for Determining the Particle Contamination and Media Migration Characteristics of Liquid Filters by Optical Microscopy, **14.02**
F 1214–89 Test Method for Water Solubility of Liquid Petroleum Products by Karl Fischer Reagent, **14.02**
F 1215–89 Test Method for Determining the Initial Efficiency of a Flatsheet Filter Medium in an Airflow Using Latex Spheres, **14.02**
F 1216–89 Practice for Rehabilitation of Existing Pipelines and Conduits by the Immersion and Curing of a Resin-Impregnated Tube, **08.04**
F 1217–89 Specification for Cooker, Steam, **15.07**
F 1218–89 Specification for Bronchoscopes, **13.01**
F 1219–89 Guide for Training the Emergency Medical Technician (Basic) to Perform Patient Primary Assessment, **13.01**
F 1220–89 Guide for Emergency Medical Services Systems (EMSS) Telecommunications, **13.01**
F 1221–89 Guide for Interagency Information Exchange, **13.01**
F 1222–89 Classification for Hardware for Wood Fencing, **01.06**
F 1223–89 Method for the Determination of Total Knee Replacement Constraint, **13.01**
F 1224–89 Guide for Providing System Evaluation for Emergency Medical Services, **13.01**
F 1225–89 Test Method for Measuring the Ribbon Exit Force for Film and Fabric Cartridges, **15.09**
F 1226–89 Test Method for Calibration of Liquid-Borne Particle Counters for Submicrometer Particle Sizing, **10.05**
F 1227–89 Test Method for Total Mass Loss of Materials and Condensation of Outgassed Volatiles on Microelectronics-Related Substrates, **10.05**
F 1228–89 Test Method for Oxidizable (Organic) Carbon on Wafer Surfaces (by Persulfate), **10.05**
F 1229–89 Guide for Establishing the Qualifications, Education, and Training of EMS, Air-Medical Patient Care Providers, **13.01**
F 1230–89 Specification for Minimum Performance Requirements for Emergency Medical Service (EMS) Ground Vehicles, **13.01**
F 1231–89 Guidelines for Ecological Considerations for the Use of Oilspill Dispersants in Freshwater and Other Inland Environments, Rivers, and Creeks, **11.04**
F 1232–89 Practice for Determination of Character Yield of Single Pass Film Ribbons, **15.09**
F 1233–89 Test Method for Security Glazing Materials and Systems, **15.07**
F 1234–89 Specification for Protective Coatings on Steel Framework for Fences, **01.06**
F 1235–89 Specification for Consumer Safety for Portable Hook-On Chairs, **15.07**
F 1236–89 Guide for Visual Inspection of Electrical Protective Rubber Products, **10.03**
F 1237–89 Specification for Commercial Dishwashing Machines, Multiple Tank, Continuous Oval-Conveyor Type Heat Sanitizing, **15.07**
F 1238–89 Specification for Refractory Silicide Sputtering Targets for Microelectronic Applications, **10.04**
F 1239–89 Test Methods for Oxygen Precipitation Characterization of Silicon Wafers by Measurement of Interstitial Oxygen Reduction, **10.05**
F 1240–89 Guide for Categorizing Results of Footwear Slip Resistant Measurements on Walkway Surfaces with an Interface of Various Foreign Substances, **15.07**
F 1241–89 Terminology of Silicon Technology, **10.05**
F 1242–89 Specification for Cuffed and Uncuffed Tracheal Tubes, **13.01**
F 1243–89 Specification for Tracheal Tube Connectors, **13.01**
F 1244–89 Specification for Berths, Marine, **01.07**
F 1245–89 Specification for Faucets, Single and Double, Compression and Self-Closing Type, Shipboard, **01.07**
F 1246 Not yet assigned
F 1247–89 Specification for Intrusion Resistant Generic Vault Structures, **15.07**
F 1248–89 Test Method for Determination of Environmental Stress Crack Resistance (ESCR) of Polyethylene Pipe, **08.04**
F 1249–89 Test Method for Water Vapor Transmission Rate Through Plastic Film and Sheeting Using a Modulated Infrared Sensor, **15.09**
F 1250–89 Specification for Consumer Safety for Stationary Exercise Bicycles, **15.07**
F 1251–89 Terminology Relating to Polymeric Biomaterials in Medical and Surgical Devices, **13.01**
F 1252–89 Test Method for Measuring Optical Reflectivity of Transparent Materials, **15.03**
F 1253–90 Guide for Training the Emergency Medical Technician (Basic) to Perform Patient Secondary Assessment, **13.01**
F 1254–90 Practice for Performance of Prehospital Manual Defillibration, **13.01**
F 1255–90 Practice for Performance of Prehospital Automated Defillibration, **13.01**
F 1256–90 Guide for Selection and Practice of the Emergency Medical Services Instructor for Basic Life Support/Emergency Medical Technician (BLS/EMT) Training Programs, **13.01**
F 1257–90 Guide for Selection and Practice of the Emergency Medical Services Instructor for Advanced Life Support/Emergency Medical Technician (ALS/EMT) Training Programs, **13.01**
F 1258–90 Practice for the Emergency Medical Dispatcher, **13.01**
F 1259–89 Guide for Design of Flat, Straight-Line Test Structures for Detecting Metallization Open-Circuit or Resistance-Increase Failure Due to Electromigration, **10.04**
F 1260–89 Test Method for Estimating Electromigration Median Time-to-Failure and Sigma of Integrated Circuit Metallizations, **10.04**
F 1261–89 Test Method for Determining the Average Width and Cross-Sectional Area of a Straight, Thin-Film Metal Line, **10.04**
F 1262–89 Guide for Transient Radiation Upset Threshold Testing of Digital Integrated Circuits, **10.04**
F 1263–89 Test Method for Analysis of Overtest Data in Radiation Testing of Electronic Parts, **10.04**

EXHIBIT 19

1991 Annual Book of ASTM Standards

Index

Alphanumeric List

ASTM Standards

Standards:

Specifications	2731
Test Methods	5794
Terminology	175
Total	8700

Each ASTM Standard has a unique serial designation. It is comprised of a capital letter indicating general classification (A, ferrous metals; B, nonferrous metals; C, cementitious, ceramic, concrete, and masonry materials; D, miscellaneous materials; E, miscellaneous subjects; F, materials for specific applications; G, corrosion, deterioration, and degradation of materials; ES, emergency standards; P, proposals), a serial number (one to four digits), a dash, and the year of issue.

In each serial designation, the number following the dash indicates the year of original adoption as standard or, in the case of revision, the year of last revision. Thus, standards adopted or revised during the year 1991 have as their final number, 91. A letter following this number indicates more than one revision during that year, that is 91a indicates the second revision in 1991, 91b the third revision, etc. Standards that have been reapproved without change are indicated by the year of last reapproval in parentheses as part of the designation number, for example, (1991). A superscript epsilon indicates an editorial change since the last revision or reapproval; $\epsilon 1$ for the first change, $\epsilon 2$ for the second, etc.

If a standard is written in acceptable metric units and has a companion standard written in inch-pound units (or other units), the metric standard is identified by a letter M after the serial number; this standard contains "hard metric" units.

If a standard is written in inch-pound units (or other units) and acceptable metric units, the document is identified by a dual alphanumeric designation.

When reference is made to a standard, the *complete* designation should be given. Best practice is to state the *designation and title*.

The boldface number(s) following the title refer to the volume(s) of the *Annual Book of ASTM Standards* in which the standard appears.

This list includes only those standards which appear in the 1991 edition of each volume of the *Annual Book of ASTM Standards*. New and revised standards that were approved after the closing date for the volume are available as separate reprints and will be listed in next year's edition.

Each ASTM standard is available as a separate reprint from ASTM. Price and order information are available from ASTM Customer Service, 1916 Race Street, Philadelphia, PA 19103, 215-299-5585.

A 486/A486M Discontinued 1989: Specification for Steel Castings for Highway Bridges

A 487/A487M–89a Specification for Steel Castings Suitable for Pressure Service, **01.01, 01.02**

A 488/A488M–89$^{\varepsilon 1}$ Practice for Steel Castings, Welding, Qualification of Procedures and Personnel, **01.02**

A 489–90 Specification for Carbon Steel Eyebolts, **15.08**

A 490–90 Specification for Heat-Treated, Steel Structural Bolts, 150 ksi (1035 MPa) Tensile Strength, **15.08**

A 490M–90 Specification for High-Strength Steel Bolts, Classes 10.9 and 10.9.3, for Structural Steel Joints [Metric], **15.08**

A 491–89 Specification for Aluminum-Coated Steel Chain-Link Fence Fabric, **01.06**

A 492–82(1987) Specification for Stainless and Heat-Resisting Steel Rope Wire, **01.03**

A 493–88 Specification for Stainless and Heat-Resisting Steel for Cold Heading and Cold Forging Bar and Wire, **01.03, 15.08**

A 494/A494M–90a Specification for Castings, Nickel and Nickel Alloy, **01.02, 02.04**

A 495–76(1983)$^{\varepsilon 1}$ Specification for Calcium-Silicon and Calcium-Manganese-Silicon, **01.02**

A 496–90a Specification for Steel Wire, Deformed, for Concrete Reinforcement, **01.04**

A 497–90a Specification for Welded Deformed Steel Wire Fabric for Concrete Reinforcement, **01.04**

A 498–86 Specification for Seamless and Welded Carbon, Ferritic, and Austenitic Alloy Steel Heat-Exchanger Tubes with Integral Fins, **01.01**

A 499–89 Specification for Steel Bars and Shapes, Carbon, Rolled from "T" Rails, **01.05**

A 500–90 Specification for Cold-Formed Welded and Seamless Carbon Steel Structural Tubing in Rounds and Shapes, **01.01, 01.04**

A 501–89 Specification for Hot-Formed Welded and Seamless Carbon Steel Structural Tubing, **01.01, 01.04**

A 502–90 Specification for Steel Structural Rivets, **15.08**

A 503–75(1989) Specification for Ultrasonic Examination of Large Forged Crankshafts, **01.05**

A 504–89 Specification for Wrought Carbon Steel Wheels, **01.04**

A 505–87 Specification for General Requirements for Steel Sheet and Strip, Alloy, Hot-Rolled and Cold-Rolled, **01.03**

A 506–87 Specification for Steel Sheet and Strip, Alloy, Hot-Rolled and Cold-Rolled, Regular Quality, **01.03**

A 507–90 Specification for Steel Sheet and Strip, Alloy, Hot-Rolled and Cold-Rolled, Drawing Quality, **01.03**

A 508/A508M–88b Specification for Quenched and Tempered Vacuum-Treated Carbon and Alloy Steel Forgings for Pressure Vessels, **01.04, 01.05**

A 509 Discontinued—Replaced by A 788

A 510–90 Specification for General Requirements for Wire Rods and Coarse Round Wire, Carbon Steel, **01.03**

A 510M–82 Specification for General Requirements for Wire Rods and Coarse Round Wire, Carbon Steel, [Metric], **01.03**

A 511–90 Specification for Seamless Stainless Steel Mechanical Tubing, **01.01**

A 512–90a Specification for Cold-Drawn Buttweld Carbon Steel Mechanical Tubing, **01.01**

A 513–90a Specification for Electric-Resistance-Welded Carbon and Alloy Steel Mechanical Tubing, **01.01**

A 514/A514M–90 Specification for High-Yield Strength, Quenched and Tempered Alloy Steel Plate, Suitable for Welding, **01.04**

A 515/A515M–82(1987) Specification for Pressure Vessel Plates, Carbon Steel, for Intermediate- and Higher-Temperature Service, **01.04**

A 516/A516M–86 Specification for Pressure Vessel Plates, Carbon Steel, for Moderate- and Lower-Temperature Service, **01.04**

A 517/A517M–87a$^{\varepsilon 1}$ Specification for Pressure Vessel Plates, Alloy Steel, High-Strength, Quenched and Tempered, **01.04**

A 518–86 Specification for Corrosion-Resistant High-Silicon Iron Castings, **01.02**

A 518M–86 Specification for Corrosion-Resistant High-Silicon Iron Castings [Metric], **01.02**

A 519–90 Specification for Seamless Carbon and Alloy Steel Mechanical Tubing, **01.01**

A 520–90 Specification for Supplementary Requirements for Seamless and Electric-Resistance-Welded Carbon Steel Tubular Products for High-Temperature Service Conforming to ISO Recommendations for Boiler Construction, **01.01**

A 521–76(1987)$^{\varepsilon 1}$ Specification for Steel, Closed-Impression Die Forgings for General Industrial Use, **01.05**

A 522/A522M–89a Specification for Forged or Rolled 8 and 9 % Nickel Alloy Steel Flanges, Fittings, Valves, and Parts for Low-Temperature Service, **01.01**

A 523–90 Specification for Plain End Seamless and Electric-Resistance-Welded Steel Pipe for High-Pressure Pipe-Type Cable Circuits, **01.01**

A 524–89 Specification for Seamless Carbon Steel Pipe for Atmospheric and Lower Temperatures, **01.01**

A 525–90 Specification for General Requirements for Steel Sheet, Zinc-Coated (Galvanized) by the Hot-Dip Process, **01.06**

A 525M–87 Specification for General Requirements for Steel Sheet, Zinc-Coated (Galvanized) by the Hot-Dip Process [Metric], **01.06**

A 526/A526M–90 Specification for Steel Sheet, Zinc-Coated (Galvanized) by the Hot-Dip Process, Commercial Quality, **01.06**

A 527/A527M–90 Specification for Steel Sheet, Zinc-Coated (Galvanized) by the Hot-Dip Process, Lock-Forming Quality, **01.06**

A 528/A528M–90 Specification for Steel Sheet, Zinc-Coated (Galvanized) by the Hot-Dip Process, Drawing Quality, **01.06**

A 529/A529M–89 Specification for Structural Steel with 42 ksi (290 MPa) Minimum Yield Point (½ In. (12.7 mm) Maximum Thickness), **01.04**

A 530/A530M–89 Specification for General Requirements for Specialized Carbon and Alloy Steel Pipe, **01.01**

A 531–90 Recommended Practice for Ultrasonic Inspection of Turbine-Generator Steel Retaining Rings, **01.05**

A 532/A532M–87 Specification for Abrasion-Resistant Cast Irons, **01.02**

A 533/A533M–87 Specification for Pressure Vessel Plates, Alloy Steel, Quenched and Tempered, Manganese-Molybdenum and Manganese-Molybdenum-Nickel, **01.04**

A 534–90 Specification for Carburizing Steels for Anti-Friction Bearings, **01.05**

A 535–85 Specification for Special-Quality Ball and Roller Bearing Steel, **01.05**

A 536–84 Specification for Ductile Iron Castings, **01.02**

A 537/A537M–86 Specification for Pressure Vessel Plates, Heat-Treated, Carbon-Manganese-Silicon Steel, **01.04**

A 538/A538M Discontinued 1989: Specification for Pressure Vessel Plates, Alloy Steel, Precipitation Hardening (Maraging), 18 Percent Nickel

A 539–90a Specification for Electric-Resistance-Welded Coiled Steel Tubing for Gas and Fuel Oil Lines, **01.01**

A 540/A540M–89 Specification for Alloy-Steel Bolting Materials for Special Applications, **01.01, 15.08**

A 541/A541M–88 Specification for Steel Forgings, Carbon and Alloy, Quenched and Tempered, for Pressure Vessel Components, **01.04, 01.05**

A 542/A542M–88 Specification for Pressure Vessel Plates, Alloy Steel, Quenched-and-Tempered, Chromium-Molybdenum Vanadium-Titanium-Boron, **01.04**

A 543/A543M–87 Specification for Pressure Vessel Plates, Alloy Steel, Quenched and Tempered Nickel-Chromium-Molybdenum, **01.04**

A 544 Discontinued 1991: Specification for Steel Wire, Carbon, Scrapless Nut Quality

A 545 Discontinued 1991: Specification for Steel Wire, Carbon, Cold-Heading Quality, for Machine Screws

A 546 Discontinued 1991: Specification for Steel Wire, Medium-High-Carbon, Cold-Heading Quality, for Hexagon-Head Bolts

A 547 Discontinued 1991: Specification for Steel Wire, Alloy, Cold-Heading Quality, for Hexagon-Head Bolts

A 548 Discontinued 1991: Specification for Steel Wire, Carbon, Cold-Heading Quality, for Tapping or Sheet Metal Screws

A 549 Discontinued 1991: Specification for Steel Wire, Carbon, Cold-Heading Quality, for Wood Screws

A 550–78(1985) Specification for Ferrocolumbium, **01.02**

A 551–81(1988) Specification for Steel Tires, **01.04**

A 552 Discontinued—Replaced by A 689

A 553/A553M–87b Specification for Pressure Vessel Plates, Alloy Steel, Quenched and Tempered 8 and 9 Percent Nickel, **01.04**

A 554–90 Specification for Welded Stainless Steel Mechanical Tubing, **01.01**

A 555/A555M–90 Specification for General Requirements for Stainless and Heat-Resisting Steel Wire and Wire Rods, **01.03**

A 556/A556M–90a Specification for Seamless Cold-Drawn Carbon Steel Feedwater Heater Tubes, **01.01**

A 557/A557M–90a Specification for Electric-Resistance-Welded Carbon Steel Feedwater Heater Tubes, **01.01**

A 558 Discontinued

A 559 Discontinued

A 560/A560M–89 Specification for Castings, Chromium-Nickel Alloy, **01.02**

A 561–71(1985) Recommended Practice for Macroetch Testing of Tool Steel Bars, **01.05**

A 562/A562M–82(1987) Specification for Pressure Vessel Plates, Carbon Steel, Manganese-Titanium for Glass or Diffused Metallic Coatings, **01.04**

A 563–90 Specification for Carbon and Alloy Steel Nuts, **01.01, 15.08**

A 563M–90 Specification for Carbon and Alloy Steel Nuts [Metric], **01.01, 15.08**

A 564/A564M–89 Specification for Hot-Rolled and Cold-Finished Age-Hardening Stainless and Heat-Resisting Steel Bars, Wire, and Shapes, **01.05**

A 565–89 Specification for Martensitic Stainless Steel Bars, Forgings, and Forging Stock for High-Temperature Service, **01.05**

A 566 Discontinued

A 567/A567M Discontinued

A 568/A568M–90b Specification for General Requirements for Steel, Carbon and High-Strength Low-Alloy Hot-Rolled Sheet and Cold-Rolled Sheet, **01.03**

A 568M Discontinued 1991— Replaced by A 568/A568M: Specification for General Requirement for Steel, Carbon and High-Strength Low-Alloy Hot-Rolled Sheet and Cold-Rolled Sheet [Metric]

A 569–85 Specification for Steel, Carbon (0.15 Maximum, Percent), Hot-Rolled Sheet and Strip, Commercial Quality, **01.03**

A 570/A570M–90 Specification for Hot-Rolled Carbon Steel Sheet and Strip, Structural Quality, **01.03, 01.04**

A 571–84 Specification for Austenitic Ductile Iron Castings for Pressure-Containing Parts Suitable for Low-Temperature Service, **01.02**

A 571M–84 Specification for Austenitic Ductile Iron Castings for Pressure-Containing Parts Suitable for Low-Temperature Service [Metric], **01.02**

C 483–66(1990) Test Method for Electrical Resistance of Conductive Ceramic Tile, **15.02**
C 484–66(1981) Test Method for Thermal Shock Resistance of Glazed Ceramic Tile, **15.02**
C 485–83(1988)$^{\epsilon 1}$ Method for Measuring Warpage of Ceramic Tile, **15.02**
C 486 Discontinued—Replaced by C 703
C 487 Discontinued
C 488–83(1988) Practice for Conducting Exterior Exposure Tests of Finishes for Thermal Insulation, **04.06**
C 489 Discontinued
C 490–89 Specification for Apparatus for Use in Measurement of Length Change of Hardened Cement Paste, Mortar, and Concrete, **04.01, 04.02**
C 491–85 Test Method for Modulus of Rupture of Air-Setting Plastic Refractories, **15.01**
C 492–82(1988) Test Method for Hydration of Granular Dead-Burned Refractory Dolomite, **15.01**
C 493–86 Test Method for Bulk Density and Porosity of Granular Refractory Materials by Mercury Displacement, **15.01**
C 494–90 Specification for Chemical Admixtures for Concrete, **04.02**
C 495–86 Test Method for Compressive Strength of Lightweight Insulating Concrete, **04.02**
C 496–90 Test Method for Splitting Tensile Strength of Cylindrical Concrete Specimens, **04.02**
C 497–88 Methods of Testing Concrete Pipe, Manhole Sections, or Tile, **04.05**
C 497M–88 Methods of Testing Concrete Pipe, Manhole Sections, or Tile [Metric], **04.05**
C 498–65(1986) Specification for Perforated Clay Drain Tile, **04.05**
C 499–78(1989)$^{\epsilon 1}$ Test Method for Facial Dimensions and Thickness of Flat, Rectangular Ceramic Wall and Floor Tile, **15.02**
C 500–88 Method of Testing Asbestos-Cement Pipe, **04.05**
C 501–84 Test Method for Relative Resistance to Wear of Unglazed Ceramic Tile by the Taber Abraser, **15.02**
C 502–78(1983) Test Method for Wedging of Flat, Rectangular Ceramic Wall and Floor Tile, **15.02**
C 503–89 Specification for Marble Dimension Stone (Exterior), **04.08**
C 504 Discontinued
C 505–90 Specification for Nonreinforced Concrete Irrigation Pipe with Rubber Gasket Joints, **04.05**
C 505M–90 Specification for Nonreinforced Concrete Irrigation Pipe with Rubber Gasket Joints [Metric], **04.05**
C 506–90 Specification for Reinforced Concrete Arch Culvert, Storm Drain, and Sewer Pipe, **04.05**
C 506M–90 Specification for Reinforced Concrete Arch Culvert, Storm Drain, and Sewer Pipe [Metric], **04.05**
C 507–90 Specification for Reinforced Concrete Elliptical Culvert, Storm Drain, and Sewer Pipe, **04.05**
C 507M–90 Specification for Reinforced Concrete Elliptical Culvert, Storm Drain, and Sewer Pipe [Metric], **04.05**
C 508–90 Specification for Asbestos-Cement Underdrain Pipe, **04.05**
C 509–90 Specification for Cellular Elastomeric Preformed Gasket and Sealing Material, **04.07, 09.02**
C 510–90 Test Method for Staining and Color Change of Single- or Multicomponent Joint Sealants, **04.07**
C 511–85 Specification for Moist Cabinets, Moist Rooms and Water Storage Tanks Used in the Testing of Hydraulic Cements and Concretes, **04.01, 04.02**
C 512–87 Test Method for Creep of Concrete in Compression, **04.02**
C 513–89 Methods of Securing, Preparing and Testing Specimens from Hardened Lightweight Insulating Concrete for Compressive Strength, **04.02**
C 514–90 Specification for Nails for the Application of Gypsum Wallboard, **04.01, 15.08**
C 515–86 Specification for Chemical-Resistant Ceramic Tower Packings, **04.05**
C 516–80(1990) Specification for Vermiculite Loose Fill Insulation, **04.06**
C 517 Discontinued 1989: Specification for Diatomaceous Earth Block and Pipe Thermal Insulation
C 518–91 Test Method for Steady-State Heat Flux Measurements and Thermal Transmission Properties by Means of the Heat Flow Meter Apparatus, **04.06**
C 519–84 Test Method for Density of Fibrous Loose Fill Building Insulations, **04.06**
C 520–81(1985) Test Method for Density of Granular Loose Fill Insulations, **04.06**
C 521 Discontinued—Replaced by C 585
C 522–87 Test Method for Airflow Resistance of Acoustical Materials, **04.06**
C 523 Discontinued 1991: Test Method for Light Reflectance of Acoustical Materials by the Integrating Sphere Reflectometer
C 524 Redesignated F 130
C 525 Redesignated F 131
C 526 Redesignated F 132
C 527 Redesignated F 133
C 528 Discontinued—Replaced by C 773
C 529 Discontinued
C 530–70(1986) Specification for Structural Clay Non-Load-Bearing Screen Tile, **04.05**
C 531–85(1990) Test Method for Linear Shrinkage and Coefficient of Thermal Expansion of Chemical-Resistant Mortars, Grouts, and Monolithic Surfacings, **04.05**
C 532–88 Specification for Structural Insulating Formboard (Cellulosic Fiber), **04.06**
C 533–85(1990) Specification for Calcium Silicate Block and Pipe Thermal Insulation, **04.06**
C 534–88 Specification for Preformed Flexible Elastomeric Cellular Thermal Insulation in Sheet and Tubular Form, **04.06**
C 535–89 Test Method for Resistance to Degradation of Large-Size Coarse Aggregate by Abrasion and Impact in the Los Angeles Machine, **04.02, 04.03**
C 536–83 Test Method for Continuity of Coatings in Glassed Steel Equipment by Electrical Testing, **02.05**
C 537–87 Test Method for Reliability of Glass Coatings on Glassed Steel Reaction Equipment by High Voltage, **02.05**
C 538–83 Test Method for Color Retention of Red, Orange, and Yellow Porcelain Enamels, **02.05**
C 539–84(1990) Test Method for Linear Thermal Expansion of Porcelain Enamel Interferometric Method, **02.05, 15.02**
C 540 Discontinued 1991: Test Method for Image Gloss of Porcelain Enamel Surfaces
C 541–83 Specification for Linings for Asbestos-Cement Pipe, **04.05**
C 542–90 Specification for Lock-Strip Gaskets, **04.07, 09.02**
C 543 Discontinued 1989: Specification for Slate Blackboards
C 544–85 Test Method for Hydration of Magnesite or Periclase Grain, **15.01**
C 545–84a Classification of Zircon Refractories, **15.01**
C 546 Discontinued
C 547–77 Specification for Mineral Fiber Preformed Pipe Insulation, **04.06**
C 548 Discontinued
C 549–81(1986) Specification for Perlite Loose Fill Insulation, **04.06**
C 550–81(1987)$^{\epsilon 1}$ Practice for Measuring Trueness and Squareness of Rigid Block Thermal Insulation, **04.06**
C 551–90 Specification for Asbestos-Cement Fiberboard Insulating Panels, **04.05**
C 552–91 Specification for Cellular Glass Block and Pipe Thermal Insulation, **04.06**
C 553–70(1977)$^{\epsilon 1}$ Specification for Mineral Fiber Blanket and Felt Insulation (Industrial Type), **04.06**
C 554–88 Test Method for Crazing Resistance of Fired Glazed Ceramic Whitewares by a Thermal Shock Method, **15.02**
C 555 Discontinued—Replaced by C 738
C 556–88 Test Method for Resistance of Overglaze Decorations to Attack by Detergents, **15.02**
C 557–73(1985)$^{\epsilon 1}$ Specification for Adhesives for Fastening Gypsum Wallboard to Wood Framing, **04.01, 15.06**
C 558 Discontinued
C 559–90 Test Method for Bulk Density by Physical Measurement of Manufactured Carbon and Graphite Articles, **15.01**
C 560–88 Method for Chemical Analysis of Graphite, **15.01**
C 561–85 Test Method for Ash in Graphite, **15.01**
C 562–85 Test Method for Moisture in Graphite, **15.01**
C 563–84 Test Method for Optimum SO_3 in Portland Cement, **04.01**
C 564–88 Specification for Rubber Gaskets for Cast Iron Soil Pipe and Fittings, **01.02, 04.07, 09.02**
C 565–83 Methods of Tension Testing of Carbon and Graphite Mechanical Materials, **15.01**
C 566–89 Test Method for Total Moisture Content of Aggregate by Drying, **04.02**
C 567–91 Test Method for Unit Weight of Structural Lightweight Concrete, **04.02**
C 568–89$^{\epsilon 1}$ Specification for Limestone Dimension Stone, **04.08**
C 569 Discontinued 1989: Test Method for Indentation Hardness of Preformed Thermal Insulations
C 570–72(1989)$^{\epsilon 1}$ Specification for Oil- and Resin-Base Caulking Compound for Building Construction, **04.07**
C 571–81(1990) Method for Chemical Analysis of Carbon and Carbon-Ceramic Refractories, **03.06**
C 572–81(1990) Method for Chemical Analysis of Chrome-Containing Refractories and Chrome Ore, **03.06**
C 573–81(1990) Method for Chemical Analysis of Fireclay and High-Alumina Refractories, **03.06**
C 574–84 Method for Chemical Analysis of Magnesite and Dolomite Refractories, **03.06**
C 575–81(1990) Method for Chemical Analysis of Silica Refractories, **03.06**
C 576–81(1990) Method for Chemical Analysis of Zircon Refractories, **03.06**
C 577–87 Test Method for Permeability of Refractories, **15.01**
C 578–87a Specification for Preformed, Cellular Polystyrene Thermal Insulation, **04.06**
C 579–82 Test Methods for Compressive Strength of Chemical-Resistant Mortars and Monolithic Surfacings, **04.05**
C 580–85(1990) Test Method for Flexural Strength and Modulus of Elasticity of Chemical-Resistant Mortars, Grouts, and Monolithic Surfacings, **04.05**
C 581–87 Practice for Determining Chemical Resistance of Thermosetting Resins Used in Glass Fiber Reinforced Structures, Intended for Liquid Service, **08.04**
C 582–87$^{\epsilon 1}$ Specification for Contact-Molded Reinforced Thermosetting Plastic (RTP) Laminates for Corrosion Resistant Equipment, **08.04**
C 583–80(1990)$^{\epsilon 1}$ Test Method for Modulus of Rupture of Refractory Materials at Elevated Temperatures, **15.01**
C 584–81(1988)$^{\epsilon 1}$ Test Method for 60-deg Specular Gloss of Glazed Ceramic Whitewares and Related Products, **15.02**
C 585–90 Practice for Inner and Outer Diameters of Rigid Thermal Insulation

E. MISCELLANEOUS SUBJECTS

E 1-91 Specification for ASTM Thermometers, **05.03, 14.03**
E 2 Discontinued—Replaced by E 883
E 3-80(1986) Methods of Preparation of Metallographic Specimens, **03.01**
E 4-89 Practices for Load Verification of Testing Machines, **03.01, 04.02, 07.02, 08.03**
E 5 Discontinued—Replaced by E 3
E 6-89 Definitions of Terms Relating to Methods of Mechanical Testing, **03.01, 08.03**
E 7-90b Definitions of Terms Relating to Metallography, **03.01**
E 8-90a Test Methods of Tension Testing of Metallic Materials, **01.02, 02.01, 02.02, 02.03, 03.01**
E 8M-90a Test Methods of Tension Testing of Metallic Materials [Metric], **01.02, 02.01, 02.02, 02.03, 03.01**
E 9-89a Compression Testing of Metallic Materials at Room Temperature, **03.01**
E 10-84 Test Method for Brinell Hardness of Metallic Materials, **03.01**
E 11-87 Specification for Wire-Cloth Sieves for Testing Purposes, **04.01, 04.02, 04.06, 04.07, 05.05, 14.02**
E 12-70(1986) Definitions of Terms Relating to Density and Specific Gravity of Solids, Liquids, and Gases, **04.02, 15.05**
E 13 Discontinued
E 14 Discontinued
E 15 Discontinued
E 16 Discontinued
E 17 Discontinued—Replaced by E 11
E 18-89a Test Methods for Rockwell Hardness and Rockwell Superficial Hardness of Metallic Materials, **02.03, 03.01**
E 19 Discontinued—Replaced by E 112
E 20-85 Practice for Particle-Size Analysis of Particulate Substances in the Range of 0.2 to 75 μm by Optical Microscopy, **14.02**
E 21-79(1988)$^{\epsilon 2}$ Recommended Practice for Elevated Temperature Tension Tests of Metallic Materials, **03.01**
E 22 Discontinued—Replaced by E 139
E 23-91 Test Methods for Notched Bar Impact Testing of Metallic Materials, **03.01**
E 24 Discontinued
E 25 Discontinued
E 26 Discontinued—Replaced by E 27
E 27 Discontinued
E 28-67(1982)$^{\epsilon 1}$ Test Method for Softening Point by Ring-and-Ball Apparatus, **06.03**
E 29-90 Practice for Using Significant Digits in Test Data to Determine Conformance with Specifications, **02.03, 03.01, 03.05, 08.03, 10.01, 10.02, 14.02**
E 30-89 Method for Chemical Analysis of Steel, Cast Iron, Open-Hearth Iron, and Wrought Iron, **03.05**
E 31-85(1989) Method for Chemical Analysis of Ferroalloys, **03.05**
E 32-86(1991) Practices for Sampling Ferroalloys and Steel Additives for Determination of Chemical Composition, **03.05**
E 33 Discontinued—Replaced by E 140
E 34-88 Test Method for Chemical Analysis of Aluminum and Aluminum Alloys, **03.05**
E 35-88 Test Method for Chemical Analysis of Magnesium and Magnesium Alloys, **03.05**
E 36 Discontinued—Replaced by E 478
E 37-76(1990)$^{\epsilon 1}$ Method for Chemical Analysis of Pig Lead, **03.05**
E 38 Discontinued 1989—Replaced by E 350: Method for Chemical Analysis of Nickel-Chromium and Nickel-Chromium-Iron Alloys
E 39-84(1990)$^{\epsilon 1}$ Methods for Chemical Analysis of Nickel, **03.05**
E 40-88 Test Method for Chemical Analysis of Slab Zinc (Spelter), **03.05**
E 41-86 Definitions of Terms Relating to Conditioning, **08.03, 14.02**
E 42 Redesignated G 23
E 43 Discontinued
E 44-84$^{\epsilon 1}$ Definitions of Terms Relating to Heat Treatment of Metals, **01.02, 03.01**
E 45-87 Practice for Determining the Inclusion Content of Steel, **03.01**
E 46-83(1987) Test Methods for Chemical Analysis of Lead- and Tin-Base Solder, **03.05**
E 47-88 Test Method for Chemical Analysis of Zinc Die-Casting Alloys, **03.05**
E 48 Discontinued—Replaced by E 140
E 49 Discontinued
E 50-90 Practices for Apparatus, Reagents, and Safety Precautions for Chemical Analysis of Metals, **03.05**
E 51 Discontinued
E 52 Discontinued
E 53-86a$^{\epsilon 1}$ Methods for Chemical Analysis of Copper, **03.05**
E 54-80(1990)$^{\epsilon 1}$ Methods for Chemical Analysis of Special Brasses and Bronzes, **03.05**
E 55-48(1986) Practice for Sampling Wrought Nonferrous Metals and Alloys for Determination of Chemical Composition, **02.01, 02.02, 03.05**
E 56-90 Method for Chemical Analysis of Silver Brazing Alloys, **03.05**
E 57 Discontinued
E 58 Discontinued—Combined with E 37
E 59-89 Method for Sampling Steel and Iron for Determination of Chemical Composition, **03.05**
E 60-87 Practice for Photometric and Spectrophotometric Methods for Chemical Analysis of Metals, **03.05**
E 61 Redesignated E 35
E 62-89 Methods for Chemical Analysis of Copper and Copper Alloys (Photometric Methods), **03.05**
E 63 Discontinued—Combined with E 75
E 64 Discontinued—Combined with E 40
E 65 Discontinued
E 66 Discontinued—Combined with A 146
E 67 Discontinued—Replaced by E 87
E 68 Discontinued
E 69-80$^{\epsilon 1}$ Test Method for Combustible Properties of Treated Wood by the Fire-Tube Apparatus, **04.07**
E 70-90 Test Method for pH of Aqueous Solutions with the Glass Electrode, **15.05**
E 71 Discontinued—Replaced by E 446
E 72-80 Method for Conducting Strength Tests of Panels for Building Construction, **04.07**
E 73-83(1991) Method of Testing Truss Assemblies, **04.07**
E 74-91 Practice for Calibration of Force Measuring Instruments for Verifying the Load Indication of Testing Machines, **03.01**
E 75-76(1984)$^{\epsilon 1}$ Method for Chemical Analysis of Copper-Nickel and Copper-Nickel-Zinc Alloys, **03.05**
E 76-83 Methods for Chemical Analysis of Nickel-Copper Alloys, **03.05**
E 77-89$^{\epsilon 1}$ Test Method for Inspection and Verification of Liquid-in-Glass Thermometers, **14.03**
E 78 Discontinued—Combined with E 9
E 79 Discontinued—Replaced by E 112
E 80 Discontinued—Replaced by E 228
E 81-90 Method for Preparing Quantitative Pole Figures of Metals, **03.01**
E 82-91 Test Method for Determining the Orientation of a Metal Crystal, **03.01**
E 83-90 Method of Verification and Classification of Extensometers, **03.01**
E 84-91a Test Method for Surface Burning Characteristics of Building Materials, **04.07**
E 85 Discontinued—Replaced by E 139
E 86 Discontinued
E 87 Discontinued
E 88-58(1986) Practice for Sampling Nonferrous Metals and Alloys in Cast Form for Determination of Chemical Composition, **02.01, 02.02, 03.05**
E 89 Discontinued—Replaced by E 112
E 90-90 Method for Laboratory Measurement of Airborne-Sound Transmission Loss of Building Partitions, **04.06**
E 91 Discontinued—Replaced by E 112
E 92-82(1987) Test Method for Vickers Hardness of Metallic Materials, **03.01**
E 93 Discontinued—Replaced by E 140
E 94-89 Guide for Radiographic Testing, **03.03**
E 95-68(1987) Specification for Cell-Type Oven with Controlled Rates of Ventilation, **10.01, 14.02**
E 96-80$^{\epsilon 2}$ Test Methods for Water Vapor Transmission of Materials, **04.04, 04.06, 08.03, 15.09**
E 97-82(1987) Test Method for 45-deg, 0-deg Directional Reflectance Factor of Opaque Specimens by Broad-Band Filter Reflectometry, **06.01, 14.02, 15.09**
E 98 Discontinued—Replaced by E 155
E 99 Discontinued—Replaced by E 390
E 100-81(1986) Specification for ASTM Hydrometers, **05.03, 14.03**
E 101-67(1987)$^{\epsilon 1}$ Method for Spectrographic Analysis of Aluminum and Aluminum Alloys by the Point-to-Plane Technique, **03.06**
E 102-81(1987)$^{\epsilon 1}$ Test Method for Saybolt Furol Viscosity of Bituminous Materials at High Temperatures, **04.04**
E 103-84(1989) Method for Rapid Indentation Hardness Testing of Metallic Materials, **02.02, 03.01**
E 104-85(1991) Recommended Practice for Maintaining Constant Relative Humidity by Means of Aqueous Solutions, **08.03, 10.01, 10.02, 11.03, 14.02**
E 105-58(1989) Practice for Probability Sampling of Materials, **07.01, 14.02**
E 106-83(1989)$^{\epsilon 1}$ Method for Chemical Analysis of Copper-Beryllium Alloys, **03.05**
E 107-83 Method for Chemical Analysis of Electronic Nickel, **03.05**
E 108-90 Method for Fire Tests of Roof Coverings, **04.04, 04.07**
E 109 Discontinued—Replaced by E 709
E 110-82(1987) Test Method for Indentation Hardness of Metallic Materials by Portable Hardness Testers, **03.01**
E 111-82(1988)$^{\epsilon 1}$ Test Method for Young's Modulus, Tangent Modulus, and Chord Modulus, **03.01**
E 112-88 Test Methods for Determining the Average Grain Size, **02.01, 03.01**
E 113 Discontinued
E 114-90 Practice for Ultrasonic Pulse-Echo Straight-Beam Testing by the Contact Method, **03.03**
E 115-87 Practices for Photographic Processing in Optical Emission Spectrographic Analysis, **03.06**
E 116-81(1991)$^{\epsilon 1}$ Practice for Photographic Photometry in Spectrochemical Analysis, **03.06**
E 117-64(1989) Method for Spectrographic Analysis of Pig Lead by the Point-to-Plane Technique, **03.06**
E 118-89 Method for Chemical Analysis of Copper-Chromium Alloys, **03.05**

E 1305–89 Practice for Preparation of Single Element Reference Solutions for Analytical Atomic Spectroscopy, **03.06**
E 1306–89 Practice for Preparation of Reactive and Refractory Metal and Alloy Samples by Electric Arc Remelting for the Determination of Chemical Composition, **03.06**
E 1307–89 Practice for Surface Preparation and Structural Adhesive Bonding of Precured Nonmetallic Composite Facings to Structural Core for Flat Shelter Panels, **04.07**
E 1308 Not yet assigned
E 1309 Not yet assigned
E 1310–89 Practice for Use of a Radiochromic Optical Waveguide Dosimetry System, **12.02**
E 1311–89 Test Method for Minimum Detectable Temperature Difference for Thermal Imaging Systems, **03.03**
E 1312–89 Practice for Electromagnetic (Eddy Current) Examination of Ferromagnetic Cylindrical Bar Product Above the Curie Temperature, **03.03**
E 1313–91 Guide for the Development of Standard Data Records for Computerization of Material Property Data, **14.01**
E 1314–89 Practice for Structuring Terminological Records Relating to Computerized Test Reporting and Materials Designation Formats, **14.01**
E 1315–89 Practice for Ultrasonic Examination of Steel with Cylindrically Convex Curved Entry Surfaces, **03.03**
E 1316–91a Terminology for Nondestructive Evaluations, **03.03**
E 1317–90 Test Method for Flammability of Marine Surface Finishes, **04.07**
E 1318–90 Specification for Highway Weight-in-Motion (WIM) Systems with User Requirements and Test Method, **04.03**
E 1319–89 Guide for High-Temperature Strain Measurement, **03.01**
E 1320–90 Reference Radiographs for Titanium Castings, **03.03**
E 1321–90 Test Method for Determining Material Ignition and Flame Spread Properties, **04.07**
E 1322–90 Guide for Selection, Training, and Evaluation of Assessors for Laboratory Accreditation Systems, **14.02**
E 1323–89 Guide for Evaluating Laboratory Measurement Practices and the Statistical Analysis of the Resulting Data, **14.02**
E 1324–90 Guide for Measuring Some Electronic Characteristics of Ultrasonic Examination Instruments, **03.03**
E 1325–91 Terminology Relating to Design of Experiments, **14.02**
E 1326–90 Guide for Evaluating Nonconventional Microbiological Tests Used for Enumerating Bacteria, **11.04**
E 1327–90 Test Method for Evaluation of Health Care Personnel Handwash Formulations by Utilizing Fingernail Regions, **11.04**
E 1328–90 Terminology Relating to Photovoltaic Solar Energy Conversion, **12.02**
E 1329–90 Practice for Verification and the Use of Control Charts in Spectrochemical Analysis, **03.06**
E 1330–90 Practice for Preparation and Calibration Solutions for Spectrophotometric and for Spectroscopic Atomic Analyses, **03.06**
E 1331–90 Test Method for Reflectance Factor and Color by Spectrophotometry Using Hemispherical Geometry, **14.02**
E 1332–90 Classification for Determination of Outdoor-Indoor Transmission Class, **04.06**
E 1333–90 Test Method for Determining Formaldehyde Levels from Wood Products Under Defined Test Conditions Using a Large Chamber, **04.07**
E 1334–90 Practice for Preparing a Serviceability Rating of a Building or Facility, **04.07**
E 1335–90 Test Method for Determination of Gold in Bullion by Cupellation, **03.05**
E 1336–91 Test Method for Obtaining Colorimetric Data from a Video Display Unit by Spectroradiometry, **14.02**
E 1337–90 Test Method for Determining Longitudinal Peak Skid Resistance of Paved Surfaces Using a Standard Reference Test Tire, **04.03**
E 1338–90 Guidelines for the Identification of Metals and Alloys in Computerized Material Property Databases, **14.01**
E 1339–90 Guidelines for the Identification of Aluminum Alloys and Parts In Computerized Material Property Databases, **14.01**
E 1340–90 Guide for Rapid Prototyping of Computerized Systems, **14.01**
E 1341–91 Practice for Obtaining Spectroradiometric Data from Radiant Sources, **14.02**
E 1342–90 Practice for Preservation by Freezing, Freeze-Drying, and Low Temperature Maintenance of Bacteria, Fungi, Protista, Viruses, Genetic Elements, and Animal and Plant Tissues, **03.06**
E 1343–90 Test Method for Molecular-Weight Cutoff Evaluation of Flat-Sheet Ultrafiltration Membranes, **03.06**
E 1344–90 Guide for Evaluation of Fuel Ethanol Manufacturing Facilities, **03.06**
E 1345–90 Practice for Reducing the Variability of Color Measurement by the Use of Multiple Measurements, **14.02**
E 1346–90 Practice for Bulk Sampling, Handling, and Preparing Edible Vegatable Oils for Sensory Evaluation, **15.07**
E 1347–90 Test Method for Color and Color Difference Measurement by Tristimulus (Filter) Colorimetry, **14.02**
E 1348–90 Test Method for Transmittance and Color by Spectrophotometry Using Hemispherical Geometry, **14.02**
E 1349–90 Test Method for Reflectance Factor and Color Using Bidirectional Geometry, **14.02**
E 1350–91 Test Methods for Testing Sheathed Thermocouples Prior to, During, and After Installation, **14.03**
E 1351–90 Practice for Production and Evaluation of Field Metallographic Replicas, **03.03**
E 1352–90 Test Methods for Cigarette Ignition Resistance of Mock-Up Upholstered Furniture Assemblies, **04.07**
E 1353–90 Test Methods for Cigarette Ignition Resistance of Components of Upholstered Furniture, **04.07**
E 1354–90a$^{\epsilon 1}$ Test Method for Heat and Visible Smoke Release Rates for Materials and Products Using an Oxygen Consumption Calorimeter, **04.07**
E 1355–90 Guide for Evaluation of the Predictive Capability of Fire Models, **04.07**
E 1356–91 Test Method for Glass Transition Temperatures by Differential Scanning Calorimetry or Differential Thermal Analysis, **14.02**
E 1357–90 Test Method for Determining the Rate of Bioleaching of Iron from Pyrite by Thiobacillus Ferrooxidans, **11.04**
E 1358–90 Test Method for Determination of Moisture Content of Particulate Wood Fuels Using a Microwave Oven, **11.04**
E 1359–90 Guide for Surveying Nondestructive Testing Agencies, **03.03**
E 1360–90 Practice for Specifying Color by Using the Optical Society of America Uniform Color Scales System, **14.02**
E 1361–90 Guide for Correction of Interelement Effects in X-Ray Spectrometric Analysis, **03.06**
E 1362 Not yet assigned
E 1363–90 Test Method for Calibration of Thermomerchanical Analyzers, **14.02**
E 1364–90 Test Method for Measuring Road Roughness by Static Level Method, **04.03**
E 1365–90 Practice for Conducting Static Acute Aquatic Toxicity Screening Tests with the Mosquito *Wyeomyia Smithii (Coquillett)*, **11.04**
E 1366–91 Practice for Standardized Aquatic Microcosm: Fresh Water, **11.04**
E 1367–90 Guide for Conducting 10-Day Static Sediment Toxicity Tests with Marine and Estaurine Amphipods, **11.04**
E 1368–90 Practice for Visual Inspection of Asbestos Abatement Projects, **04.07**
E 1369–90 Guide for Selecting Techniques for Treating Uncertainty and Risk in the Economic Evaluation of Buildings and Building Systems, **04.07**
E 1370–90 Guide to Air Sampling Strategies for Worker and Workplace Protection, **11.03**
E 1371–90 Test Method for the Gravimetric Determination of Phosphorus in Phosphorus-Copper Alloys or Phosphorus-Copper-Silver Alloys, **03.05**
E 1372–90 Test Method for Conducting a 90-Day Oral Toxicity Study in Rats, **11.04**
E 1373–90 Test Method for Conducting a Subchronic Inhalation Toxicity Study in Rats, **11.04**
E 1374–90 Guide for Open Office Acoustics and Applicable ASTM Standards, **04.06**
E 1375–90 Test Method for Measuring the Interzone Attenuation of Furniture Panels Used as Acoustical Barriers, **04.06**
E 1376–90 Test Method for Measuring the Interzone Attenuation of Sound Reflected by Wall Finishes and Furniture Panels, **04.06**
E 1377–90 Specification for Laboratory Glass Kjeldahl Flasks, **14.02**
E 1378–90 Specification for Laboratory Glass Multiple Neck Distilling/Boiling Flasks, **14.02**
E 1379–90 Specification for Laboratory Glass Dewar Flask, **14.02**
E 1380–90 Specification for Color Coding of Laboratory Pipets with Multiple Graduations, 0.1 mL and Larger, But Excluding Disposable Prothrombin and Disposible Micropipets, **14.02**
E 1381–91 Specification for Low-Level Protocol to Transfer Messages Between Clinical Laboratory Instruments and Computer Systems, **14.01**
E 1382–91 Test Methods for Determining the Average Gram Size Using Semiautomatic and Automatic Image Analysis, **03.01**
E 1383–90 Guide for Conducting Sediment Toxicity Tests with Freshwater Invertebrates, **11.04**
E 1384 Not yet assigned
E 1385–90 Practice for Separation and Concentration of Flammable or Combustible Liquid Residues from Fire Debris Samples by Steam Distillation, **13.01**
E 1386–90 Practice for Separation and Concentration of Flammable or Combustible Liquid Residues from Fire Debris Samples by Solvent Extraction, **13.01**
E 1387–90 Test Method for Flammable or Combustible Liquid Residues in Extracts from Samples of Fire Debris by Gas Chromatography, **13.01**
E 1388–90 Practice for Sampling of Headspace Vapors from Fire Debris Sampling, **13.01**
E 1389–90 Practice for Cleanup of Fire Debris Sample Extracts by Acid Stripping, **13.01**
E 1390–90 Guide for Illuminators Used for Viewing Industrial Radiographs, **03.03**
E 1391–90 Guide for Collection, Storage, Characterization, and Manipulation of Sediments for Toxicological Testing, **11.04**
E 1392–90 Test Method for Angle Resolved Optical Scatter Measurements on Specular or Diffuse Surfaces, **14.02**
E 1393–90 Test Method for Determining the Polishability of Bituminous Pavement Surfaces and Specimens by Means of the Penn State Reciprocating Polishing Machine, **04.03**
E 1394–91 Specification for Transferring Information Between Clinical Instruments and Computer Systems, **14.01**
E 1395–90 Test Method for Sensory Evaluation of Low Heat Chilies, **15.07**
E 1396–90 Test Method for Sensory Evaluation of Oleoresin Capsicum, **15.07**

(BLS/EMT) Training Programs, **13.01**
F 1257–90 Guide for Selection and Practice of the Emergency Medical Services Instructor for Advanced Life Support/Emergency Medical Technician (ALS/EMT) Training Programs, **13.01**
F 1258–90 Practice for the Emergency Medical Dispatcher, **13.01**
F 1259–89 Guide for Design of Flat, Straight-Line Test Structures for Detecting Metallization Open-Circuit or Resistance-Increase Failure Due to Electromigration, **10.04**
F 1260–89 Test Method for Estimating Electromigration Median Time-to-Failure and Sigma of Integrated Circuit Metallizations, **10.04**
F 1261–89 Test Method for Determining the Average Width and Cross-Sectional Area of a Straight, Thin-Film Metal Line, **10.04**
F 1262–89 Guide for Transient Radiation Upset Threshold Testing of Digital Integrated Circuits, **10.04**
F 1263–89 Test Method for Analysis of Overtest Data in Radiation Testing of Electronic Parts, **10.04**
F 1264–89 Specification for Intramedullary Fixation Devices, **13.01**
F 1265–90 Test Method for Resistance to Impact of Resilient Floor Tile, **15.04**
F 1266–89 Performance Requirements for Cerebral Stereotactic Instruments, **13.01**
F 1267–89 Specification for Metal, Expanded, Steel, **01.07**
F 1268–90 Guide for Establishing and Operating a Public Information, Education, and Relations Program for Emergency Medical Systems, **13.01**
F 1269–89 Practice for Destructive Shear Testing of Ball Bonds, **10.04**
F 1270–89 Practice for Preparing and Locating Emergency Station Bills, **01.07**
F 1271–90 Specification for Spill Valves for Use in Marine Tank Liquid Overpressure Protection Applications, **01.07**
F 1272 Not yet assigned
F 1273 Not yet assigned
F 1274–91 Specification for Fixed Wing Advanced Life Support Transport Units, **13.01**
F 1275–90 Test Method for the Performance of Griddles, **15.07**
F 1276–90 Test Method for Creep Relaxation of Laminated Composite Gasket Materials, **09.02**
F 1277–90 Test Method for Determination of Leachable Chloride in Packing and Gasketing Materials by Ion-Selective Electrode Technique, **09.02**
F 1278–90 Guide for Use and Handling of Flexible Retort Food Pouches in the Manufacturing Environment, **15.07**
F 1279–90 Specification for Ecological Considerations for the Use of Oilspill Dispersants in Freshwater and Other Inland Environments—Permeable Surfaces, **11.04**
F 1280–90 Specification for Ecological Considerations for the Use of Oilspill Dispersants in Freshwater and Other Inland Environments—Impermeable Surfaces, **11.04**
F 1281–90 Specification for Crosslinked Polyethylene/Aluminum/Crosslinked Polyethylene (PEX/Al/PEX) Pressure Pipe, **08.04**
F 1282–90 Specification for Polyethylene/Aluminum/Polyethylene (PE-Al-PE) Composite Pressure Pipe, **08.04**
F 1283–91 Specification for Fixed Wing Specialized Medical Transport Units, **13.01**
F 1284 Not yet assigned
F 1285–90 Guide for Training the Emergency Medical Technician (Basic) to Perform Patient Examination Techniques, **13.01**
F 1286–90 Guide for Development and Operation of Level I Pediatric Trauma Facilities, **13.01**
F 1287–90 Guide for Scope of Performance of First Responders Who Provide Emergency Medical Care, **13.01**
F 1288–90 Guide for Planning for and Response to a Multiple Casualty Incident, **13.01**
F 1289–90 Practice for Development of Literature Pertaining to the Selection of Residential Resilient Vinyl Floor Coverings, **15.04**
F 1290–90 Practice for Electrofusion Joining Polyolefin Pipe and Fittings, **08.04**
F 1291–90 Test Method for Measuring the Thermal Insulation of Clothing Using a Heated Manikin, **15.07**
F 1292–91[ε1] Specification for Measurement of Impact Attenuation of Surface Systems Under and Around Playground Equipment, **15.07**
F 1293–91 Test Method for Evaluation of Coated Transparent Plastics Subjected to Cyclic Flexural/Thermal Fatigue, **15.03**
F 1294 Not yet assigned
F 1295 Not yet assigned
F 1296–91 Guide for Evaluating Chemical Protective Clothing, **15.07**
F 1297–90 Guide for Location and Instruction Symbols for Evacuation and Lifesaving Equipment, **01.07**
F 1298–90 Specification for Ball Joints of Flexible/Expansion Type for Marine Applications, **01.07**
F 1299–90 Specification for Food Service Equipment Hoods for Cooking Appliances, **15.07**
F 1300 Not yet assigned
F 1301–90 Practice for Labeling Chemical Protective Clothing, **15.07**
F 1302–90 Practice for Abbreviated Marking of Plastic Consumer Products, **15.07**
F 1303–90 Specification for Sheet Vinyl Floor Covering with Backing, **15.04**
F 1304–90 Test Method for Deflection of Resilient Floor Tile, **15.04**
F 1305–90 Guide for Classification of Amusement Ride and Device-Related Injuries and Illnesses, **15.07**
F 1306–90 Test Method for Slow Rate Penetration Resistance of Flexible Barrier Films and Laminates, **15.09**
F 1307–90 Test Method for Oxygen Transmission Rate Through Dry Packages Using a Coulometer Sensor, **15.09**
F 1308–90 Test Method for Analytical Procedure for Quantitating Volatile Extractables in Microwave Susceptors Used for Food Products, **15.09**
F 1309–90 Practice for Installation Procedures for Fitting Chocks to Marine Machinery Foundations, **01.07**
F 1310–90 Specification for 65-Gallon Dispensing Tank, **01.07**
F 1311–90 Specification for Large-Diameter Fabricated Carbon Steel Flanges, **01.07**
F 1312–90 Specification for Brick, Insulating, High-Temperature, Fireclay, **01.07**
F 1313–90 Specification for Volatile *n*-Nitrosamine Levels in Rubber Nipples on Pacifiers, **15.07**
F 1314–90 Specification for Wrought Nitrogen-Strengthened, High-Manganese, High-Chromium Stainless Steel Bar and Wire for Surgical Implants, **13.01**
F 1315–90 Test Method for Density of a Sheet Gasket Material, **09.02**
F 1316–90 Test Method for Determining the Transmissivity of Transparent Parts, **15.03**
F 1317–90 Test Method for Calibration of Microwave Ovens, **15.09**
F 1318–90 Test Method for Determination of Productivity Using Electrostatic Copy Machines with Various Configurations, **15.09**
F 1319–90 Test Method for Determination of Abrasion and Smudge Resistance of Images Produced from Business Copy Products (Crockmeter Method), **15.09**
F 1320 Not yet assigned
F 1321–90 Guide for Conducting a Stability Test (Lightweight Survey and Inclining Experiment) to Determine the Light Ship Displacement and Centers of Gravity of a Vessel, **01.07**
F 1322–90 Guide for Selection of Shipboard Incinerators, **01.07**
F 1323–90 Specification for Shipboard Incinerators, **01.07**
F 1324 Not yet assigned
F 1325–91 Specification for Suture Needle Holders—General Workmanship Requirements and Corresponding Test Methods, **13.01**
F 1326 Not yet assigned
F 1327 Not yet assigned
F 1328–90 Guide for Training the Emergency Medical Technician (Basic) to Prepare Patients for Medical Transportation, **13.01**
F 1329–91 Guide for Training the Emergency Medical Technician (Basic) in Basic Anatomy and Physiology, **13.01**
F 1330 Not yet assigned
F 1331 Not yet assigned
F 1332 Not yet assigned
F 1333 Not yet assigned
F 1334–91 Test Method for Determining Sound Power Level of Vacuum Cleaners, **15.07**
F 1335 Not yet assigned
F 1336 Not yet assigned
F 1337 Not yet assigned
F 1338 Not yet assigned
F 1339 Not yet assigned
F 1340–91 Test Method for Determining the Mean Interface Trap Density of Mosfets by Charge-Pumping, **10.04**
F 1341 Not yet assigned
F 1342 Not yet assigned
F 1343–91 Specification for Anesthetic Equipment—Scavenging Systems for Anesthetic Gases, **13.01**

G. CORROSION, DETERIORATION, AND DEGRADATION of MATERIALS

G 1–90 Recommended Practice for Preparing, Cleaning, and Evaluating Corrosion Test Specimens, **03.02**
G 2–88 Practice for Aqueous Corrosion Testing of Samples of Zirconium and Zirconium Alloys, **02.04, 03.02, 12.02**
G 2M–88 Test Method for Corrosion Testing of Products of Zirconium, Hafnium and Their Alloys in Water at 633°K or in Steam at 673°K [Metric], **02.04, 03.02, 12.02**
G 3–89 Recommended Practice for Conventions Applicable to Electrochemical Measurements in Corrosion Testing, **03.02**
G 4–84 Guide for Conducting Corrosion Coupon Tests in Plant Equipment, **03.02**
G 5–87 Standard Reference Test Method for Making Potentiostatic and Potentiodynamic Anodic Polarization Measurements, **03.02**
G 6–83 Test Method for Abrasion Resistance of Pipeline Coatings, **06.01, 14.02**
G 7–89 Recommended Practice for Atmospheric Environmental Exposure Testing of Nonmetallic Materials, **14.02**
G 8–90 Test Method for Cathodic Disbonding of Pipeline Coatings, **06.01, 14.02**
G 9–87 Test Method for Water Penetration into Pipeline Coatings, **06.01, 14.02**
G 10–83(1988) Test Method for Specific Bendability of Pipeline Coatings, **06.01, 14.02**
G 11–83 Test Method for Effects of Outdoor Weathering on Pipeline Coatings, **06.01, 14.02**
G 12–83 Method for Nondestructive Measurement of Film Thickness of Pipeline Coatings on Steel, **06.01, 14.02**
G 13–89 Test Method for Impact Resistance of Pipeline Coatings (Limestone Drop Test), **06.01, 14.02**
G 14–83 Test Method for Impact Resistance of Pipeline Coatings (Falling Weight Test), **06.01, 14.02**
G 15–90a Terminology Relating to Corrosion and Corrosion Testing, **03.02**
G 16–71(1984) Recommended Practice for Applying Statistics to Analysis of Corrosion Data, **03.02**
G 17–83 Test Method for Penetration Resistance of Pipeline Coatings (Blunt Rod), **06.01, 14.02**
G 18–88 Test Method for Joints, Fittings, and Patches in Coated Pipelines, **06.01, 14.02**
G 19–83 Test Method for Disbonding Characteristics of Pipeline Coatings by Direct Soil Burial, **06.01, 14.02**
G 20–83 Test Method for Chemical Resistance of Pipeline Coatings, **06.01, 14.02**
G 21–90 Recommended Practice for Determining Resistance of Synthetic Polymeric Materials to Fungi, **08.03, 14.02**
G 22–76(1990) Recommended Practice for Determining Resistance of Plastics to Bacteria, **08.03, 14.02**
G 23–90 Practice for Operating Light- and Water-Exposure Apparatus (Carbon-Arc Type) for Exposure of Nonmetallic Materials, **06.01, 07.02, 08.03**
G 24–87 Practice for Conducting Natural Light Exposures Under Glass, **07.02, 14.02**
G 25 Discontinued—Replaced by G 23
G 26–90 Practice for Operating Light-Exposure Apparatus (Xenon-Arc Type) With and Without Water for Exposure of Nonmetallic Materials, **06.01, 08.03, 14.02**
G 27 Discontinued—Replaced by G 26
G 28–85 Method for Detecting Susceptibility to Intergranular Attack in Wrought Nickel-Rich, Chromium-Bearing Alloys, **03.02**
G 29–90 Practice for Determining Algal Resistance of Plastic Films, **14.02**
G 30–90 Practice for Making and Using U-Bend Stress Corrosion Test Specimens, **03.02**
G 31–72(1990) Recommended Practice for Laboratory Immersion Corrosion Testing of Metals, **03.02**
G 32–85 Method for Vibratory Cavitation Erosion Test, **03.02**
G 33–88 Practice for Recording Data from Atmospheric Corrosion Tests of Metallic-Coated Steel Specimens, **03.02**
G 34–86(1990) Test Method for Exfoliation Corrosion Susceptibility in 2XXX and 7XXX Series Aluminum Alloys (EXCO Test), **03.02**
G 35–88 Practice for Determining the Susceptibility of Stainless Steels and Related Nickel-Chromium-Iron Alloys to Stress Corrosion Cracking in Polythionic Acids, **03.02**
G 36–87 Recommended Practice for Performing Stress-Corrosion Cracking Tests in a Boiling Magnesium Chloride Solution, **03.02**
G 37–90 Practice for Use of Mattson's Solution of pH 7.2 to Evaluate the Stress-Corrosion Cracking Susceptibility of Copper-Zinc Alloys, **03.02**
G 38–73(1990)$^{\epsilon 1}$ Practices for Making and Using C-Ring Stress Corrosion Cracking Test Specimen, **03.02**
G 39–90 Practice for Preparation and Use of Bent-Beam Stress-Corrosion Specimens, **03.02**
G 40–90a Terminology Relating to Erosion and Wear, **03.02**
G 41–90 Practice for Determining Cracking Susceptibility of Metals Exposed Under Stress to a Hot Salt Environment, **03.02**
G 42–90 Methods for Cathodic Disbonding of Pipeline Coatings Subjected to Elevated Temperatures, **06.01, 14.02**
G 43 Discontinued—Replaced by G 85: Method of Acidified Synthetic Sea Water (Fog), Testing
G 44–88 Practice for Alternate Immersion Stress Corrosion Testing in 3.5 % Sodium Chloride Solution, **02.02, 03.02**
G 45 Discontinued
G 46–76(1986)$^{\epsilon 1}$ Recommended Practice for Examination and Evaluation of Pitting Corrosion, **03.02**
G 47–90 Test Method for Determining Susceptibility to Stress-Corrosion Cracking of High-Strength Aluminum Alloy Products, **02.02, 03.02**
G 48–76(1980)$^{\epsilon 1}$ Test Method for Pitting and Crevice Corrosion Resistance of Stainless Steels and Related Alloys by the Use of Ferric Chloride Solution, **03.02**
G 49–85(1990)$^{\epsilon 1}$ Recommended Practice for Preparation and Use of Direct Tension Stress Corrosion Test Specimens, **03.02**
G 50–76(1984) Recommended Practice for Conducting Atmospheric Corrosion Tests on Metals, **03.02**
G 51–77(1984) Test Method for pH of Soil for Use in Corrosion Testing, **03.02, 04.08**
G 52–88 Practice for Exposing and Evaluating Metals and Alloys in Surface Seawater, **03.02**
G 53–88 Recommended Practice for Operating Light- and Water-Exposure Apparatus (Fluorescent UV-Condensation Type) for Exposure of Nonmetallic Materials, **06.01, 08.03, 14.02**
G 54–84 Recommended Practice for Simple Static Oxidation Testing, **03.02**
G 55–83 Method for Evaluating Pipeline Coating and Patch Materials, **14.02**
G 56–82(1989) Test Method for Abrasiveness of Ink-Impregnated Fabric Printer Ribbons, **03.02**
G 57–78(1984)$^{\epsilon 1}$ Method for Field Measurement of Soil Resistivity Using the Wenner Four-Electrode Method, **03.02, 04.08**
G 58–85(1990)$^{\epsilon 1}$ Practice for the Preparation of Stress Corrosion Test Specimen for Weldments, **03.02**
G 59–78(1984)$^{\epsilon 1}$ Practice for Conducting Potentiodynamic Polarization Resistance Measurements, **03.02**
G 60–86 Method for Conducting Cyclic Humidity Tests, **03.02**
G 61–86 Test Method for Conducting Cyclic Potentiodynamic Polarization Measurements for Localized Corrosion Susceptibility of Iron-, Nickel-, or Cobalt-Based Alloys, **03.02**
G 62–87 Test Methods for Holiday Detection in Pipeline Coatings, **14.02**
G 63–87 Guide for Evaluating Nonmetallic Materials for Oxygen Service, **14.02**
G 64–85 Classification of Resistance to Stress-Corrosion Cracking of High-Strength Aluminum Alloys, **03.02**
G 65–91 Test Method for Measuring Abrasion Using the Dry Sand/Rubber Wheel Apparatus, **03.02**
G 66–86 Method for Visual Assessment of Exfoliation Corrosion Susceptibility of 5XXX Series Aluminum Alloys (Asset Test), **03.02**
G 67–86 Test Method for Determining the Susceptibility to Intergranular Corrosion of 5XXX Series Aluminum Alloys by Mass Loss After Exposure to Nitric Acid (NAMLT Test), **03.02**
G 68–80 Practice for Liquid Sodium Corrosion Testing of Metals and Alloys *(Intent to Withdraw)*, **03.02**
G 69–81 Practice for Measurement of Corrosion Potentials of Aluminum Alloys, **03.02**
G 70–81(1987) Test Method for Ring Bendability of Pipeline Coatings (Squeeze Test), **14.02**
G 71–81(1986)$^{\epsilon 1}$ Practice for Conducting and Evaluating Galvanic Corrosion Tests in Electrolytes, **03.02**
G 72–82(1987) Test Method for Autogenous Ignition Temperature of Liquids and Solids in a High-Pressure Oxygen-Enriched Environment, **14.02**
G 73–82(1987)$^{\epsilon 1}$ Practice for Liquid Impingement Erosion Testing, **03.02**
G 74–82(1987) Test Method for Ignition Sensitivity of Materials to Gaseous Fluid Impact, **14.02**
G 75–89 Test Method for Slurry Abrasivity by Miller Number and Slurry Abrasion Response of Materials (SAR Number), **03.02**
G 76–83(1989)$^{\epsilon 1}$ Practice for Conducting Erosion Tests by Solid Particle Impingement Using Gas Jets, **03.02**
G 77–91 Practice for Ranking Resistance of Materials to Sliding Wear Using Block-On-Ring Wear Test, **03.02**
G 78–89 Guide for Crevice Corrosion Testing of Iron Base and Nickel Base Stainless Alloys in Seawater and Other Chloride-Containing Aqueous Environments, **03.02**
G 79–83 Practice for Evaluation of Metals Exposed to Carburization Environments, **03.02**
G 80–88 Test Method for Specific Cathodic Disbonding of Pipeline Coatings, **14.02**
G 81–83(1989) Practice for Jaw Crusher Gouging Abrasion Test, **03.02**
G 82–83(1989) Guide for Development and Use of a Galvanic Series for Predicting Galvanic Corrosion Performance, **03.02**
G 83–90 Test Method for Wear Testing with a Crossed Cylinder Apparatus, **03.02**
G 84–89 Practice for Measurement of Time-of Wetness on Surfaces Exposed to Wetting Conditions as in Atmospheric Corrosion Testing, **03.02**
G 85–84(1990)$^{\epsilon 1}$ Practice for Modified Salt Spray (Fog) Testing, **03.02**
G 86–89 Test Method for Determining the Ignition Sensitivity of Materials to Mechanical Impact in Pressurized Oxygen Environments, **14.02**
G 87–84(1990)$^{\epsilon 1}$ Practice for Conducting Moist SO_2 Tests **03.02**
G 88–90 Guide for Designing Systems for Oxygen Service, **14.02**
G 89–85 Methods for Cathodic Disbonding of Pipeline Coatings Subjected to Cyclic Temperatures *(Intent to Withdraw)*, **14.02**
G 90–85 Practice for Performing Accelerated Outdoor Weathering of Nonmetallic Materials Using Concentrated Natural Sunlight, **14.02**

EXHIBIT 20

1992 Annual Book of ASTM Standards

Index

Alphanumeric List

ASTM Standards

Standards:

Specifications	2578
Test Methods	6130
Terminology	238
Total	8946

Each ASTM Standard has a unique serial designation. It is comprised of a capital letter indicating general classification (A, ferrous metals; B, nonferrous metals; C, cementitious, ceramic, concrete, and masonry materials; D, miscellaneous materials; E, miscellaneous subjects; F, materials for specific applications; G, corrosion, deterioration, and degradation of materials; ES, emergency standards; P, proposals), a serial number (one to four digits), a dash, and the year of issue.

In each serial designation, the number following the dash indicates the year of original adoption as standard or, in the case of revision, the year of last revision. Thus, standards adopted or revised during the year 1992 have as their final number, 92. A letter following this number indicates more than one revision during that year, that is 92a indicates the second revision in 1992, 92b the third revision, etc. Standards that have been reapproved without change are indicated by the year of last reapproval in parentheses as part of the designation number, for example, (1992). A superscript epsilon indicates an editorial change since the last revision or reapproval; ε1 for the first change, ε2 for the second, etc.

If a standard is written in acceptable metric units and has a companion standard written in inch-pound units (or other units) the metric standard is identified by a letter M after the serial number; this standard contains "hard metric" units.

If a standard is written in inch-pound units (or other units) and acceptable metric units, the document is identified by a dual alphanumeric designation.

When reference is made to a standard, the complete designation should be given. Best practice is to state the *designation and title*.

The boldface number(s) following the title refer to the volume(s) of the *Annual Book of ASTM Standards* in which the standard appears.

This list includes only those standards which appear in the 1992 edition of each volume of the *Annual Book of ASTM Standards*. New and revised standards that were approved after the closing date for the volume are available as separate reprints and will be listed in next year's edition.

Each ASTM standard is available as a separate reprint from ASTM. Price and order information are available from ASTM Customer Service, 1916 Race Street, Philadelphia, PA 19103, 215 299-5585.

D 2118-84(1990) Practice for Assigning a Standard Commercial Moisture Content for Wool and Its Products, **07.01**
D 2119-87 Test Method for Aldehydes in Styrene Monomer, **06.03**
D 2120-87 Test Method for Inhibitor, *p-tert*-Butylcatechol, in Styrene Monomer, **06.03**
D 2121-90 Test Method for Polymer Content of Styrene Monomer, **06.03**
D 2122-90 Method for Determining Dimensions of Thermoplastic Pipe and Fittings, **08.04**
D 2123 Discontinued 1989: Specification for Rigid Poly(Vinyl Chloride-Vinyl Acetate) Plastic Sheet
D 2124-70(1988) Test Method for Analysis of Components in Poly(Vinyl Chloride) Compounds Using an Infrared Spectrophotometric Technique, **08.02**
D 2125 Discontinued
D 2126-87 Test Method for Response of Rigid Cellular Plastics to Thermal and Humid Aging, **08.02**
D 2127 Discontinued—Replaced by D 2842
D 2128 Discontinued
D 2129-90 Test Method for Color of Water White Electrical Insulating Liquids, **10.03**
D 2130-90 Test Method for Diameter of Wool and Other Animal Fibers by Microprojection, **07.01**
D 2131-90a Specification for Natural Muscovite Mica Splittings, **10.01**
D 2132-89 Test Method for Dust-and-Fog Tracking and Erosion Resistance of Electrical Insulating Materials, **10.01**
D 2133 Discontinued 1986—Replaced by D 4181: Specification for Acetal Resin Injection Molding and Extrusion Materials
D 2134 Discontinued 1990: Test Method for Softening of Organic Coatings by Plastic Compositions
D 2135 Discontinued 1989: Classification of Hard Rubbers
D 2136-84(1989)$^{\epsilon 1}$ Test Method for Coated Fabrics—Low-Temperature Bend Test, **09.01, 09.02**
D 2137-89 Test Methods for Rubber Property—Brittleness Point of Flexible Polymers and Coated Fabrics, **09.01, 09.02**
D 2138 Discontinued 1990— Replaced by D 4776 and D 4777: Test Method for Rubber Property—Adhesion to Textile Cord
D 2139 Redesignated F 38
D 2140-91 Test Method for Carbon-Type Composition of Insulating Oils of Petroleum Origin, **10.03**
D 2141 Discontinued
D 2142 Discontinued
D 2143-69(1987)$^{\epsilon 1}$ Test Method for Cyclic Pressure Strength of Reinforced, Thermosetting Plastic Pipe, **08.04**
D 2144-90 Method for Examination of Electrical Insulating Oils by Infrared Absorption, **10.03**
D 2145 Discontinued
D 2146 Discontinued—Replaced by D 4101
D 2147 Discontinued
D 2148-90 Test Methods for Bondable Rubber Tapes Used for Electrical Insulation, **10.01**
D 2149-90 Test Method for Permittivity (Dielectric Constant) and Dissipation Factor of Solid Ceramic Dielectrics at Frequencies to 10 MHz and Temperature to 500°C, **10.01**
D 2150 Discontinued—Replaced by D 4357
D 2151-89 Test Method for Staining of Poly(Vinyl Chloride) Compositions by Rubber Compounding Ingredients, **08.02**
D 2152-80(1986)$^{\epsilon 1}$ Test Method for Degree of Fusion of Extruded Poly(Vinyl Chloride) (PVC) Pipe and Molded Fittings by Acetone Immersion, **08.04**
D 2153 Discontinued
D 2154 Discontinued—Replaced by D 1835
D 2155 Discontinued—Replaced by E 659
D 2156-80(1988)$^{\epsilon 1}$ Test Method for Smoke Density in Flue Gases from Burning Distillate Fuels, **05.02**
D 2157-80(1988)$^{\epsilon 1}$ Test Method for Effect of Air Supply on Smoke Density in Flue Gases from Burning Distillate Fuels, **05.02**
D 2158-89 Test Method for Residues in Liquefied Petroleum (LP) Gases, **05.02**
D 2159-88 Test Method for Naphthenes in Saturates Fractions by Refractivity Intercept, **05.02**
D 2160-85 Test Method for Thermal Stability of Hydraulic Fluids, **05.02**
D 2161-87 Method for Conversion of Kinematic Viscosity to Saybolt Universal Viscosity or to Saybolt Furol Viscosity, **05.02, 10.03**
D 2162-91 Test Method for Basic Calibration of Master Viscometers and Viscosity Oil Standards, **05.02**
D 2163-91 Test Method for Analysis for Liquefied Petroleum (LP) Gases and Propene Concentrates by Gas Chromatography, **05.02, 05.05**
D 2164-83(1987) Methods of Testing Structural Insulating Roof Deck, **04.09**
D 2165-90 Test Method for pH of Aqueous Extracts of Wool and Similar Animal Fibers, **07.01**
D 2166-91 Test Methods for Unconfined Compressive Strength of Cohesive Soil, **04.08**
D 2167-84(1990) Test Method for Density and Unit Weight of Soil In-Place by the Rubber Balloon Method, **04.08**
D 2168-90 Method for Calibration of Laboratory Mechanical-Rammer Soil Compactors, **04.08**
D 2169 Discontinued
D 2170-85(1990) Test Method for Kinematic Viscosity of Asphalts (Bitumens), **04.03**
D 2171-85 Test Method for Viscosity of Asphalts by Vacuum Capillary Viscometer, **04.03**
D 2172-92 Test Method for Quantitative Extraction of Bitumen from Bituminous Paving Mixtures, **04.03**
D 2173 Discontinued
D 2174 Discontinued
D 2175 Discontinued
D 2176-89 Test Method for Folding Endurance of Paper by the M.I.T. Tester, **15.09**
D 2177-87$^{\epsilon 1}$ Test Method for Ink Absorption of Blotting Paper, **15.09**
D 2178-89$^{\epsilon 1}$ Specification for Asphalt Glass (Felt) Used in Roofing and Waterproofing, **04.04**
D 2179-65(1990)$^{\epsilon 1}$ Specification for Combination Bar Soap, **15.04**
D 2180-89 Test Method for Active Oxygen in Bleaching Compounds, **15.04**
D 2181 Discontinued
D 2182 Discontinued
D 2183 Discontinued 1991: Test Method for Flow Properties of Adhesives
D 2184 Discontinued
D 2185 Discontinued
D 2186-84(1990) Test Methods for Deposit-Forming Impurities in Steam, **11.02**
D 2187-91 Test Methods for Physical and Chemical Properties of Particulate Ion-Exchange Resins, **11.02**
D 2188 Discontinued—Replaced by E 691
D 2189 Discontinued
D 2190-89 Specification for Vinyl Acetate, **06.03**
D 2191-89 Test Method for Acetaldehyde Content of Vinyl Acetate, **06.03**
D 2192-89 Test Method for Purity of Aldehydes and Ketones, **06.03**
D 2193-89 Test Method for Hydroquinone in Vinyl Acetate, **06.03**
D 2194-89 Test Method for Concentration of Formaldehyde Solutions, **06.03**
D 2195-89 Test Methods for Pentaerythritol, **06.03**
D 2196-86(1991)$^{\epsilon 1}$ Test Method for Rheological Properties of Non-Newtonian Materials by Rotational (Brookfield) Viscometer, **06.01**
D 2197-86(1991)$^{\epsilon 1}$ Test Methods for Adhesion of Organic Coatings by Scrape Adhesion, **06.01**
D 2198-84(1989)$^{\epsilon 1}$ Test Method for Stain Removal from Multicolor Lacquers, **06.01**
D 2199-82(1987) Method for Measurement of Plasticizer Migration from Vinyl Fabrics to Lacquers, **06.01**
D 2200-91 Pictorial Surface Preparation Standards for Painting Steel Surfaces, **06.01**
D 2201-65(1987)$^{\epsilon 1}$ Method for Preparation of Hot-Dipped Nonpassivated Galvanized Steel Panels for Testing Paint, Varnish Lacquer, and Related Products, **06.01**
D 2202-88 Test Method for Slump of Sealants, **04.07**
D 2203-88 Test Method for Staining from Sealants, **04.07**
D 2204 Discontinued
D 2205-85(1990)$^{\epsilon 1}$ Guide for Selection of Tests for Traffic Paints, **06.01**
D 2206 Discontinued—Replaced by D 3624
D 2207-90 Test Method for Bursting Strength of Leather by the Ball Method, **15.04**
D 2208-90 Test Method for Breaking Strength of Leather by the Grab Method, **15.04**
D 2209-90 Test Method for Tensile Strength of Leather, **15.04**
D 2210-89$^{\epsilon 1}$ Test Method for Grain Crack and Extension of Leather by the Mullen Test, **15.04**
D 2211-64(1989)$^{\epsilon 1}$ Test Method for Elongation of Leather, **15.04**
D 2212-80(1989) Test Method for Slit Tear Resistance of Leather, **15.04**
D 2213-70(1988) Test Method for Compressibility of Leather, **15.04**
D 2214-70(1988) Test Method for Estimating the Thermal Conductivity of Leather with the Cenco-Fitch Apparatus, **15.04**
D 2215 Discontinued
D 2216-90$^{\epsilon 1}$ Test Method for Laboratory Determination of Water (Moisture) Content of Soil and Rock, **04.08**
D 2217-85 Practice for Wet Preparation of Soil Samples for Particle-Size Analysis and Determination of Soil Constants, **04.08**
D 2218-67(1989)$^{\epsilon 1}$ Specification for Molybdate Orange Pigments, **06.02**
D 2219-87 Specification for Poly(Vinyl Chloride) Insulation for Wire and Cable, 60°C Operation, **10.01**
D 2220-80 Specification for Poly(Vinyl Chloride) Insulation for Wire and Cable, 75°C Operation, **10.01**
D 2221-68(1984)$^{\epsilon 1}$ Test Method for Creep Properties of Package Cushioning Materials, **15.09**
D 2222-66(1988) Test Method for Methanol Extract of Vinyl Chloride Resins, **08.02**
D 2223-84(1989) Test Method for Oxygen Impurity in Nitrogen (Electrochemical Method), **10.03**
D 2224 Discontinued 1989: Test Method for Mean Molecular Weight of Mineral Insulating Oils by the Cryoscopic Method
D 2225-86 Method of Testing Silicone Fluids Used for Electrical Insulation, **10.03**
D 2226-87$^{\epsilon 1}$ Classification for Various Types of Petroleum Oils for Rubber Compounding Use, **05.02, 09.01**
D 2227-90 Specification for Natural Rubber (NR) Technical Grades, **09.01**
D 2228-88 Test Method for Rubber Property—Abrasion Resistance (Pico Abrader), **09.01**
D 2229-85$^{\epsilon 1}$ Test Method for Rubber Property—Adhesion to Steel Cord, **07.01, 09.01**
D 2230-90 Test Methods for Rubber Property—Extrudability of Unvulcanized Compounds, **09.01**
D 2231-87 Practice for Rubber Properties in Forced Vibration, **09.01**

F 467M-90b Specification for Nonferrous Nuts for General Use [Metric], **02.02, 02.04, 15.08**
F 468-90b Specification for Nonferrous Bolts, Hex Cap Screws, and Studs for General Use, **02.02, 02.04, 15.08**
F 468M-90b Specification for Nonferrous Bolts, Hex Cap Screws, and Studs for General Use [Metric], **02.02, 02.04, 15.08**
F 469 Discontinued
F 470-89 Practice for Caking Temperature of Dry Electrostatic Toner, **15.09**
F 471-86(1991) Definitions of Terms Relating to Combination Locks, **15.07**
F 472-92 Terminology for Geometry of Alpine Skis, **15.07**
F 473-76(1988)$^{\epsilon 1}$ Specification for Binding Mounting Area Dimensions on Alpine Skis, **15.07**
F 474-76(1988)$^{\epsilon 1}$ Specification for Static Screw Retention Strength of Binding Mounting Area on Alpine Skis, **15.07**
F 475-77(1992) Specification for Test Screw Used in Screw-Retention Test of Binding Mounting Area on Alpine Skis, **15.07**
F 476-84(1991) Test Methods for Security of Swinging Door Assemblies, **15.07**
F 477-90 Specification for Elastomeric Seals (Gaskets) for Joining Plastic Pipe, **08.04**
F 478-92 Specification for In-Service Care of Insulating Line Hose and Covers, **10.03**
F 479-88a Specification for In-Service Care of Insulating Blankets, **10.03**
F 480-90$^{\epsilon 1}$ Specification for Thermoplastic Water Well Casing Pipe and Couplings Made in Standard Dimension Ratios (SDR), SCH 40 and SCH 80, **08.04**
F 481-87 Practice for Installation of Thermoplastic Pipe and Corrugated Tubing in Septic Tank Leach Fields, **08.04**
F 482-84 Method for Total Immersion Corrosion Test for Tank-Type Aircraft Maintenance Chemicals, **15.03**
F 483-90(1991)$^{\epsilon 1}$ Test Method for Total Immersion Corrosion Test for Aircraft Maintenance Chemicals, **15.03**
F 484-83$^{\epsilon 1}$ Test Method for Stress Crazing of Acrylic Plastics in Contact with Liquid or Semi-Liquid Compounds, **15.03**
F 485-90(1991)$^{\epsilon 1}$ Test Method for Effects of Cleaners on Unpainted Aircraft Surfaces, **15.03**
F 486-87(1991)$^{\epsilon 1}$ Practice for Preparation of Use and Care Booklets for Vacuum Cleaners, **15.07**
F 487-88 Specification for Fine Aluminum-1 % Silicon Wire for Semiconductor Lead-Bonding, **10.04**
F 488-79$^{\epsilon 1}$ Test Method for Total Bacterial Count in Water, **10.05, 11.02**
F 489-77(1988)$^{\epsilon 1}$ Test Method for Static Coefficient of Friction of Shoe Sole and Heel Materials as Measured by the James Machine, **15.07**
F 490-77 Method for Microscopical Sizing and Counting Particles on Membrane Filters Using Image Shear, **14.02**
F 491-91 Specification for Poly(Vinylidene Fluoride) (PVDF) Plastic-Lined Ferrous Metal Pipe and Fittings, **08.04**
F 492-91 Specification for Propylene and Polypropylene (PP) Plastic-Lined Ferrous Metal Pipe and Fittings, **08.04**
F 493-89 Specification for Solvent Cements for Chlorinated Poly(Vinyl Chloride) (CPVC) Plastic Pipe and Fittings, **08.04**
F 494-78(1988)$^{\epsilon 1}$ Method for Evaluating Primary Filter Integrity for Vacuum Cleaners, **15.07**
F 495-88 Test Method for Weight Loss of Gasket Materials Upon Exposure to Elevated Temperatures, **09.02**
F 496-91 Specification for In-Service Care of Insulating Gloves and Sleeves, **10.03**
F 497-91 Practice for Use of the Electric Typewriter and Electronic Typewriter as a Test Instrument, **15.09**
F 498-77(1988) Test Method for Center Spring Constant and Spring Constant Balance of Alpine Skis, **15.07**
F 499-84 Practice for Installation of Wood Underlayment and Preparation of the Surface to Receive Resilient Flooring (*Intent to Withdraw*), **15.04**
F 500-77 Specification for Self-Curing Acrylic Resins Used in Neurosurgery, **13.01**
F 501-88 Test Method for Aerospace Materials Response to Flame, with Vertical Test Specimen (for Aerospace Vehicles Standard Conditions), **15.03**
F 502-83$^{\epsilon 1}$ Test Method for Effects of Cleaning and Chemical Maintenance Materials on Painted Aircraft Surfaces, **15.03**
F 503 Discontinued 1988—Replaced by F 1104: Recommended Practice for Preparing Aircraft Cleaning Compounds, Liquid-Pipe, for Storage Stability Testing
F 504-77(1983) Method for Measuring Release Moments of Adult Alpine Ski Bindings, **15.07**
F 505-87 Practice for the Comparative Evaluation of the Imaging Properties of Liquid Electrostatic Toners, **15.09**
F 506-77(1987) Practice for Assessing the Quality of Direct Image Paper Offset Masters, **15.09**
F 507-77(1989) Practice for Mounting Wedged Beamsplitters to Maintain a Laser Beam Parallel to a Reference Surface, **10.04**
F 508-77(1991) Practice for Specifying Thick-Film Pastes, **10.04**
F 509-86(1991) Practice for Testing One-Time Carbonizing Tissue for Pinholes, **15.09**
F 510-81(1987) Test Method for Resistance to Abrasion of Resilient Floor Coverings Using an Abrader with a Grit-Feed Method, **15.04**
F 511-88 Test Method for Quality of Cut (Joint Tightness) of Resilient Floor Tile, **15.04**
F 512-89a Specification for Smooth-Wall Poly(Vinyl Chloride) (PVC) Conduit and Fittings for Underground Installation, **08.04**
F 513-89 Safety Specification for Eye and Face Protective Equipment for Hockey Players, **15.07**
F 514 Not yet assigned
F 515 Discontinued
F 516 Discontinued 1988
F 517-77(1989) Practice for Aligning a Visible Beam from a Continuous-Wave Laser at a Desired Distance from a Reference Surface, **10.04**
F 518-77(1991) Practice for Determining the Effective Adhesion of Photoresist to Hard-Surface Photomask Blanks and Semiconductor Wafers During Etching **10.05**
F 519-77$^{\epsilon 1}$ Method for Mechanical Hydrogen Embrittlement Testing of Plating Processes and Aircraft Maintenance Chemicals, **02.05, 15.03**
F 520-77(1989) Test Method for Environmental Resistance of Aerospace Transparencies, **15.03**
F 521-83(1989)$^{\epsilon 1}$ Test Methods for Bond Integrity of Transparent Laminates, **15.03**
F 522-88 Test Method for Stacking Fault Density of Epitaxial Layers of Silicon by Interference-Contrast Microscopy, **10.05**
F 523-88 Practice for Unaided Visual Inspection of Polished Silicon Slices, **10.05**
F 524-87(1992) Methods for Measuring Beam Divergence of Pulsed Lasers by the Apertured-Detector Technique, **10.04**
F 525-88 Method for Measuring Resistivity of Silicon Wafers Using a Spreading Resistance Probe, **10.05**
F 526-91 Methods for Dose Measurements for Use in Linear Accelerator Pulsed Radiation Effects Tests, **10.04**
F 527-80(1991)$^{\epsilon 1}$ Practice for Adjusting Photoresist Exposure Time, **10.05**
F 528-91 Test Method for Measurement of Common-Emitter D-C Current Gain of Junction Transistors, **10.04**
F 529-80(1987)$^{\epsilon 1}$ Method for Interpretation of Interferograms of Nominally Plane Wavefronts, **10.04, 10.05**
F 530-81(1987)$^{\epsilon 1}$ Test Method for Wavefront Distortion of Laser Rods, **10.04**
F 531-81(1987)$^{\epsilon 1}$ Test Methods for Wavefront Distortion and Face Parallelism of Laser Disks, **10.04**
F 532-81(1987)$^{\epsilon 1}$ Methods for Measuring Width of Defects in Optical Surfaces, Using Nomarski Differential Microscopy, **10.04, 10.05**
F 533-90 Test Method for Thickness and Thickness Variation of Silicon Slices, **10.05**
F 534-88 Test Method for Bow of Silicon Slices, **10.05**
F 535 Discontinued
F 536-77(1988) Test Method for Size of Resilient Floor Tile by Dial Gage Method, **15.04**
F 537-91a Specification for Design, Fabrication, and Installation of Fences Constructed of Wood and Related Materials, **01.06**
F 538-91b Terminology Relating to the Characteristics and Performance of Tires, **09.02**
F 539-78(1986)$^{\epsilon 1}$ Practice for Fitting Athletic Footwear, **15.07**
F 540-90 Test Method for Squareness of Resilient Floor Tile by Dial Gage Method, **15.04**
F 541-90 Specification for Alloy Steel Eyebolts, **15.08**
F 542-80(1991) Test Method for Exothermic Temperature of Encapsulating Compounds for Electronic and Microelectronic Encapsulation, **10.04**
F 543-92 Specification for Cortical Bone Screws, **13.01**
F 544-77(1991) Reference Chart for Pictorial Bone Screw Classification, **13.01**
F 545-91 Specification for PVC and ABS Injected Solvent Cemented Plastic Pipe Joints, **08.04**
F 546-91 Specification for Perfluoro (Ethylene-Propylene) Copolymer (FEP) Plastic-Lined Ferrous Metal Pipe and Fittings, **08.04**
F 547-77(1990)$^{\epsilon 1}$ Definitions of Terms Relating to Nails for Use with Wood and Wood-Base Materials, **04.09, 15.08**
F 548-81(1987) Test Method for Intensity of Scratches on Aerospace Transparent Plastics, **15.03**
F 549-85(1990) Definitions of Terms Relating to Carbonless Copy Products, **15.09**
F 550-77(1987) Test Method for Lithographic Properties of Imaging Materials, **15.09**
F 551-89 Practice for Using a Nominal 67.23-in. (1.707-m) Diameter Laboratory Test Roadwheel in Testing Tires, **09.02**
F 552-88b Definitions of Terms Relating to Chain Link Fencing, **01.06**
F 553-85 Test Method for Carbon Paper Durability, **15.09**
F 554 Discontinued—Replaced by F 376
F 555-85(1990) Test Method for Motor Life Evaluation of an Upright Vacuum Cleaner, **15.07**
F 556-88 Test Method for Curl of Carbonless Copy Papers, **15.09**
F 557 Discontinued
F 558-88 Test Method for Measuring Air Performance Characteristics of Vacuum Cleaners, **15.07**
F 559-90 Method for Measuring Length of Road Test Courses Using a Fifth Wheel, **09.02**
F 560-86 Specification for Unalloyed Tantalum for Surgical Implant Applications, **13.01**
F 561-87 Practice for Analysis of Retrieved Metallic Orthopaedic Implants, **13.01**
F 562-84(1991) Specification for Wrought Cobalt-Nickel-Chromium-Molybdenum Alloy for Surgical Implant Applications, **13.01**
F 563-88 Specification for Wrought Cobalt-Nickel-Chromium-Molybdenum-Tungsten-Iron Alloy for Surgical Implant Applications, **13.01**
F 564-85(1991) Specification for Bone Staples, **13.01**

Resistance (ESCR) of Polyethylene Pipe, **08.04**

F 1249–90 Test Method for Water Vapor Transmission Rate Through Plastic Film and Sheeting Using a Modulated Infrared Sensor, **15.09**

F 1250–89 Specification for Consumer Safety for Stationary Exercise Bicycles, **15.07**

F 1251–89 Terminology Relating to Polymeric Biomaterials in Medical and Surgical Devices, **13.01**

F 1252–89 Test Method for Measuring Optical Reflectivity of Transparent Materials, **15.03**

F 1253–90 Guide for Training the Emergency Medical Technician (Basic) to Perform Patient Secondary Assessment, **13.01**

F 1254–90 Practice for Performance of Prehospital Manual Defillibration, **13.01**

F 1255–90 Practice for Performance of Prehospital Automated Defillibration, **13.01**

F 1256–90 Guide for Selection and Practice of the Emergency Medical Services Instructor for Basic Life Support/Emergency Medical Technician (BLS/EMT) Training Programs, **13.01**

F 1257–90 Guide for Selection and Practice of the Emergency Medical Services Instructor for Advanced Life Support/Emergency Medical Technician (ALS/EMT) Training Programs, **13.01**

F 1258–90 Practice for Emergency Medical Dispatch, **13.01**

F 1259–89 Guide for Design of Flat, Straight-Line Test Structures for Detecting Metallization Open-Circuit or Resistance-Increase Failure Due to Electromigration, **10.04**

F 1260–89 Test Method for Estimating Electromigration Median Time-to-Failure and Sigma of Integrated Circuit Metallizations, **10.04**

F 1261–89 Test Method for Determining the Average Width and Cross-Sectional Area of a Straight, Thin-Film Metal Line, **10.04**

F 1262–89 Guide for Transient Radiation Upset Threshold Testing of Digital Integrated Circuits, **10.04**

F 1263–89 Test Method for Analysis of Overtest Data in Radiation Testing of Electronic Parts, **10.04**

F 1264–89 Guide for Mechanical Performance Considerations for Intramedullary Fixation Devices, **13.01**

F 1265–90 Test Method for Resistance to Impact of Resilient Floor Tile, **15.04**

F 1266–89 Performance Specification for Cerebral Stereotactic Instruments, **13.01**

F 1267–91 Specification for Metal, Expanded, Steel, **01.07**

F 1268–90 Guide for Establishing and Operating a Public Information, Education, and Relations Program for Emergency Medical Systems, **13.01**

F 1269–89 Practice for Destructive Shear Testing of Ball Bonds, **10.04**

F 1270–89 Practice for Preparing and Locating Emergency Station Bills, **01.07**

F 1271–90 Specification for Spill Valves for Use in Marine Tank Liquid Overpressure Protection Applications, **01.07**

F 1272 Not yet assigned

F 1273–91 Specification for Tank Vent Flame Arresters, **01.07**

F 1274–91 Specification for Fixed Wing Advanced Life Support Transport Units, **13.01**

F 1275–90 Test Method for the Performance of Griddles, **15.07**

F 1276–92 Test Method for Creep Relaxation of Laminated Composite Gasket Materials, **09.02**

F 1277–90 Test Method for Determination of Leachable Chloride in Packing and Gasketing Materials by Ion-Selective Electrode Technique, **09.02**

F 1278–90 Guide for Use and Handling of Flexible Retort Food Pouches in the Manufacturing Environment, **15.07**

F 1279–90 Specification for Ecological Considerations for the Use of Oilspill Dispersants in Freshwater and Other Inland Environments—Permeable Surfaces, **11.04**

F 1280–90 Specification for Ecological Considerations for the Use of Oilspill Dispersants in Freshwater and Other Inland Environments—Impermeable Surfaces, **11.04**

F 1281–91 Specification for Crosslinked Polyethylene/Aluminum/Crosslinked Polyethylene (PEX/Al/PEX) Pressure Pipe, **08.04**

F 1282–91 Specification for Polyethylene/Aluminum/Polyethylene (PE-Al-PE) Composite Pressure Pipe, **08.04**

F 1283–91 Specification for Fixed Wing Specialized Medical Transport Units, **13.01**

F 1284–92 Test Method for Evaluating Carpet Embedded Dirt Removal Effectiveness of Residential Central Vacuum Cleaning Systems, **15.07**

F 1285–90 Guide for Training the Emergency Medical Technician (Basic) to Perform Patient Examination Techniques, **13.01**

F 1286–90 Guide for Development and Operation of Level I Pediatric Trauma Facilities, **13.01**

F 1287–90 Guide for Scope of Performance of First Responders Who Provide Emergency Medical Care, **13.01**

F 1288–90 Guide for Planning for and Response to a Multiple Casualty Incident, **13.01**

F 1289–90 Practice for Development of Literature Pertaining to the Selection of Residential Resilient Vinyl Floor Coverings, **15.04**

F 1290–90 Practice for Electrofusion Joining Polyolefin Pipe and Fittings, **08.04**

F 1291–90 Test Method for Measuring the Thermal Insulation of Clothing Using a Heated Manikin, **15.07**

F 1292–91$^{\varepsilon 1}$ Specification for Measurement of Impact Attenuation of Surface Systems Under and Around Playground Equipment, **15.07**

F 1293–91a Test Method for Evaluation of Coated Transparent Plastics Subjected to Cyclic Flexural/Thermal Fatigue, **15.03**

F 1294 Not yet assigned

F 1295 Not yet assigned

F 1296–91 Guide for Evaluating Chemical Protective Clothing, **15.07**

F 1297–90 Guide for Location and Instruction Symbols for Evacuation and Lifesaving Equipment, **01.07**

F 1298–90 Specification for Ball Joints of Flexible/Expansion Type for Marine Applications, **01.07**

F 1299–90 Specification for Food Service Equipment Hoods for Cooking Appliances, **15.07**

F 1300 Not yet assigned

F 1301–90 Practice for Labeling Chemical Protective Clothing, **15.07**

F 1302 Discontinued 1991: Practice for Abbreviated Marking of Plastic Consumer Products

F 1303–90 Specification for Sheet Vinyl Floor Covering with Backing, **15.04**

F 1304–90 Test Method for Deflection of Resilient Floor Tile, **15.04**

F 1305–90 Guide for Classification of Amusement Ride and Device-Related Injuries and Illnesses, **15.07**

F 1306–90 Test Method for Slow Rate Penetration Resistance of Flexible Barrier Films and Laminates, **15.09**

F 1307–90 Test Method for Oxygen Transmission Rate Through Dry Packages Using a Coulometer Sensor, **15.09**

F 1308–90 Test Method for Analytical Procedure for Quantitating Volatile Extractables in Microwave Susceptors Used for Food Products, **15.09**

F 1309–90 Practice for Installation Procedures for Fitting Chocks to Marine Machinery Foundations, **01.07**

F 1310–90 Specification for 65-Gallon Dispensing Tank, **01.07**

F 1311–90 Specification for Large-Diameter Fabricated Carbon Steel Flanges, **01.07**

F 1312–90 Specification for Brick, Insulating, High-Temperature, Fireclay, **01.07**

F 1313–90 Specification for Volatile *n*-Nitrosamine Levels in Rubber Nipples on Pacifiers, **15.07**

F 1314–90 Specification for Wrought Nitrogen-Strengthened, High-Manganese, High-Chromium Stainless Steel Bar and Wire for Surgical Implants, **13.01**

F 1315–90 Test Method for Density of a Sheet Gasket Material, **09.02**

F 1316–90 Test Method for Determining the Transmissivity of Transparent Parts, **15.03**

F 1317–90 Test Method for Calibration of Microwave Ovens, **15.09**

F 1318–90 Test Method for Determination of Productivity Using Electrostatic Copy Machines with Various Configurations, **15.09**

F 1319–90 Test Method for Determination of Abrasion and Smudge Resistance of Images Produced from Business Copy Products (Crockmeter Method), **15.09**

F 1320–91 Test Method for the Evaluating Thermal Paper Employing a Facsimile Thermal Printer as a Test Instrument, **15.09**

F 1321–91 Guide for Conducting a Stability Test (Lightweight Survey and Inclining Experiment) to Determine the Light Ship Displacement and Centers of Gravity of a Vessel, **01.07**

F 1322–90 Guide for Selection of Shipboard Incinerators, **01.07**

F 1323–90 Specification for Shipboard Incinerators, **01.07**

F 1324 Not yet assigned

F 1325–91 Specification for Suture Needle Holders—General Workmanship Requirements and Corresponding Test Methods, **13.01**

F 1326–91 Test Method for Measuring Maximum Dry Volume of Utility Vacuum Cleaners, **15.07**

F 1327–91 Terminology Relating to Barrier Materials for Medical Packaging, **15.09**

F 1328–90 Guide for Training the Emergency Medical Technician (Basic) to Prepare Patients for Medical Transportation, **13.01**

F 1329–91 Guide for Training the Emergency Medical Technician (Basic) in Basic Anatomy and Physiology, **13.01**

F 1330–91 Guide for Metallic Abrasive Blasting to Descale the Interior of Pipe, **01.07**

F 1331–91 Practice for Installation Procedures of Vinyl Deck Covering on Portable Plates in Electrical and Electronic Spaces, **01.07**

F 1332–91 Practice for Use of SI (Metric Units) in Maritime Applications (Committee F-25 Supplement to E 380), **01.07**

F 1333–91 Specification for Construction of Fire and Foam Station Cabinets, **01.07**

F 1334–91 Test Method for Determining Sound Power Level of Vacuum Cleaners, **15.07**

F 1335–91 Specification for Pressure-Rated Composite Pipe and Fittings for Hot and Cold Service, **08.04**

F 1336–91 Specification for Poly(Vinyl Chloride) (PVC) Gasketed Sewer Fittings, **08.04**

F 1337–91 Practice for Human Engineering Program Requirements for Ships and Marine Systems, Equipment and Facilities, **01.07**

F 1338–91 Guide for Main Propulsion Medium Speed Marine Diesel Engines Covering Performance and Minimum Scope of Assembly, **01.07**

F 1339–92 Guide for Organization and Operation of Emergency Medical Services Systems, **13.01**

F 1340–92 Test Method for Determining the Mean Interface Trap Density of MOSFETs by Charge-Pumping, **10.04**

F 1342–91 Test Method for Protective Clothing Material Resistance to Puncture, **15.07**

F 1343–91 Specification for Anesthetic Equipment—Scavenging Systems for Anesthetic Gases, **13.01**

F 1344–91 Specification for Rubber Floor Tile, **15.04**

EXHIBIT 21

1993 Annual Book of ASTM Standards

Index

Alphanumeric List

ASTM Standards

Standards:

Specifications	2587
Test Methods	6364
Terminology	187
Total	9138

Each ASTM Standard has a unique serial designation. It is comprised of a capital letter indicating general classification (A, ferrous metals; B, nonferrous metals; C, cementitious, ceramic, concrete, and masonry materials; D, miscellaneous materials; E, miscellaneous subjects; F, materials for specific applications; G, corrosion, deterioration, and degradation of materials; ES, emergency standards; P, proposals), a serial number (one to four digits), a dash, and the year of issue.

In each serial designation, the number following the dash indicates the year of original adoption as standard or, in the case of revision, the year of last revision. Thus, standards adopted or revised during the year 1993 have as their final number, 93. A letter following this number indicates more than one revision during that year, that is 93a indicates the second revision in 1993, 93b the third revision, etc. Standards that have been reapproved without change are indicated by the year of last reapproval in parentheses as part of the designation number, for example, (1993). A superscript epsilon indicates an editorial change since the last revision or reapproval; $\epsilon 1$ for the first change, $\epsilon 2$ for the second, etc.

If a standard is written in acceptable metric units and has a companion standard written in inch-pound units (or other units), the metric standard is identified by a letter M after the serial number; this standard contains "hard metric" units.

If a standard is written in inch-pound units (or other units) and acceptable metric units, the document is identified by a dual alphanumeric designation.

When reference is made to a standard, the *complete* designation should be given. Best practice is to state the *designation and title.*

The boldface number(s) following the title refer to the volume(s) of the *Annual Book of ASTM Standards* in which the standard appears.

This list includes only those standards which appear in the 1993 edition of each volume of the *Annual Book of ASTM Standards*. New and revised standards that were approved after the closing date for the volume are available as separate reprints and will be listed in next year's edition.

Each ASTM standard is available as a separate reprint from ASTM. Price and order information are available from ASTM Customer Service, 1916 Race Street, Philadelphia, PA 19103, 215-299-5585.

B. NONFERROUS METALS

B 1–90 Specification for Hard-Drawn Copper Wire, **02.01, 02.03**
B 2–88$^{\epsilon 1}$ Specification for Medium-Hard-Drawn Copper Wire, **02.01, 02.03**
B 3–90 Specification for Soft or Annealed Copper Wire, **02.01, 02.03**
B 4 Discontinued
B 5–89 Specification for Electrolytic Tough-Pitch Copper Refinery Shapes, **02.01, 02.03**
B 6–87 (1992)$^{\epsilon 1}$ Specification for Zinc (Slab Zinc), **02.03, 02.04, 02.05**
B 7 Discontinued—Replaced by B 30
B 8–86$^{\epsilon 1}$ Specification for Concentric-Lay-Stranded Copper Conductors, Hard, Medium-Hard, or Soft, **02.03**
B 9–90 Specification for Bronze Trolley Wire, **02.01, 02.03**
B 10 Discontinued
B 11 Discontinued
B 12 Discontinued—Replaced by B 133
B 13 Discontinued
B 14 Discontinued
B 15 Discontinued—Replaced by B 124
B 16–92 Specification for Free-Cutting Brass Rod, Bar, and Shapes for Use in Screw Machines, **02.01**
B 16M–92 Specification for Free-Cutting Brass Rod, Bar, and Shapes for Use in Screw Machines [Metric], **02.01**
B 17 Discontinued—Replaced by B 66, B 67
B 18 Discontinued—Replaced by E 46, E 57
B 19–86 Specification for Cartridge Brass Sheet, Strip, Plate, Bar, and Disks (Blanks), **02.01**
B 20 Discontinued—Combined with B 19
B 21–90 Specification for Naval Brass Rod, Bar, and Shapes, **02.01**
B 21M–90a Specification for Naval Brass, Rod, Bar, and Shapes [Metric], **02.01**
B 22–93a Specification for Bronze Castings for Bridges and Turntables, **02.01**
B 23–83 Specification for White Metal Bearing Alloys (Known Commercially as Babbitt Metal), **02.04**
B 24 Discontinued
B 25 Discontinued—Replaced by B 209
B 26/B26M–92a Specification for Aluminum-Alloy Sand Castings, **02.02**
B 27 Discontinued—Replaced by E 54
B 28 Discontinued—Replaced by E 54
B 29–92 Specification for Pig Lead, **02.03, 02.04**
B 30–93 Specification for Copper-Base Alloys in Ingot Form, **02.01**
B 31 Discontinued—Replaced by B 30
B 32–93 Specification for Solder Metal, **02.04**
B 33–91 Specification for Tinned Soft or Annealed Copper Wire for Electrical Purposes, **02.03**
B 34 Redesignated E 53
B 35 Discontinued—Replaced by E 37
B 36/B36M–91a$^{\epsilon 1}$ Specification for Brass Plate, Sheet, Strip, and Rolled Bar, **02.01**
B 37–92 Specification for Aluminum for Use in Iron and Steel Manufacture, **02.02**
B 38 Discontinued—Replaced by E 40
B 39–79(1993) Specification for Nickel, **02.04, 02.05**
B 40 Discontinued—Replaced by E 34
B 41 Discontinued—Replaced by E 39
B 42–93 Specification for Seamless Copper Pipe, Standard Sizes, **02.01**
B 43–91 Specification for Seamless Red Brass Pipe, Standard Sizes, **02.01**
B 44 Discontinued—Replaced by B 111
B 45 Discontinued—Replaced by E 36, E 54
B 46 Discontinued—Replaced by E 54
B 47–64(1990) Specification for Copper Trolley Wire, **02.03**
B 48–92 Specification for Soft Rectangular and Square Bare Copper Wire for Electrical Conductors, **02.01, 02.03**
B 49–90 Specification for Hot-Rolled Copper Redraw Rod for Electrical Purposes, **02.03**
B 50 Discontinued
B 51 Discontinued
B 52 Discontinued—Replaced by B 644
B 53 Discontinued—Replaced by B 644
B 54 Discontinued—Replaced by B 132, B 147
B 55 Discontinued
B 56 Discontinued—Replaced by B 111
B 57 Discontinued—Replaced by B 171
B 58 Discontinued—Replaced by B 179
B 59 Discontinued—Replaced by B 148
B 60 Discontinued—Replaced by B 143
B 61–93 Specification for Steam or Valve Bronze Castings, **02.01**
B 62–93 Specification for Composition Bronze or Ounce Metal Castings, **02.01**
B 63–90 Test Method for Resistivity of Metallically Conducting Resistance and Contact Materials, **03.04**
B 64 Discontinued—Replaced by B 260
B 65 Discontinued—Replaced by B 146
B 66–93a Specification for Bronze Castings in the Rough for Steam Locomotive Wearing Parts, **02.01**
B 67–93a Specification for Car and Tender Journal Bearings, Lined, **02.01, 02.04**
B 68–92a Specification for Seamless Copper Tube, Bright Annealed, **02.01**
B 68M–92a Specification for Seamless Copper Tube, Bright Annealed [Metric], **02.01**
B 69–92 Specification for Rolled Zinc, **02.04**
B 70–90 Specification for Change of Resistance with Temperature of Metallic Materials for Electrical Heating, **03.04**
B 71 Discontinued—Replaced by E 38
B 72 Discontinued
B 73 Discontinued—Replaced by B 260
B 74 Discontinued—Replaced by B 144
B 75–92a Specification for Seamless Copper Tube, **02.01, 02.03**
B 75M–92a Specification for Seamless Copper Tube [Metric], **02.01, 02.03**
B 76–90 Method for Accelerated Life Test of Nickel-Chromium and Nickel-Chromium-Iron Alloys for Electrical Heating, **03.04**
B 77–90 Test Method for Thermoelectric Power of Electrical-Resistance Alloys, **03.04**
B 78–90 Method for Accelerated Life Test of Iron-Chromium-Aluminum Alloys for Electrical Heating, **03.04**
B 79 Discontinued—Replaced by B 209
B 80–93 Specification for Magnesium-Alloy Sand Castings, **02.02**
B 81 Redesignated E 56
B 82 Discontinued—Replaced by B 344
B 83 Discontinued—Replaced by B 344
B 84–90 Test Method for Temperature-Resistance Constants of Alloy Wires for Precision Resistors, **03.04**
B 85–92a Specification for Aluminum-Alloy Die Castings, **02.02**
B 86–88 Specification for Zinc-Alloy Die Castings, **02.04**
B 87 Discontinued—Replaced by B 8
B 88–93 Specification for Seamless Copper Water Tube, **02.01**
B 88M–93 Specification for Seamless Copper Water Tube [Metric], **02.01**
B 89 Discontinued—Replaced by B 211
B 90M Discontinued 1993 Replaced by B 90/B90M: Specification for Magnesium-Alloy Sheet and Plate (Metric)
B 90/B90M–93 Specification for Magnesium-Alloy Sheet and Plate, **02.02**
B 91–92 Specification for Magnesium-Alloy Forgings, **02.02**
B 92M Discontinued 1990—Replaced by B 92/B 92M: Specification for Magnesium Ingot and Stick for Remelting [Metric]
B 92/B92M–89 Specification for Magnesium Ingot and Stick for Remelting, **02.02**
B 93M Discontinued—1990 Replaced by B 93/B93M: Specification for Magnesium Alloys in Ingot Form for Sand Castings, Permanent Mold Castings, and Die Castings
B 93/B93M–92 Specification for Magnesium Alloys in Ingot Form for Sand Castings, Permanent Mold Castings, and Die Castings, **02.02**
B 94–92 Specification for Magnesium-Alloy Die Castings, **02.02**
B 95 Discontinued—Replaced by E 228
B 96–92a Specification for Copper-Silicon Alloy Plate Sheet, Strip, and Rolled Bar for General Purposes and Pressure Vessels, **02.01**
B 96M–85 Specification for Copper-Silicon Alloy Plate, Sheet, Strip, and Rolled Bar for General Purposes [Metric], **02.01**
B 97 Discontinued (To be combined with B 96)
B 98–92 Specification for Copper-Silicon Alloy Rod, Bar, and Shapes, **02.01**
B 98M–92 Specification for Copper-Silicon Alloy Rod, Bar, and Shapes [Metric], **02.01**
B 99–86a Specification for Copper-Silicon Alloy Wire for General Purposes, **02.01**
B 99M–86a(1992) Specification for Copper-Silicon Alloy Wire for General Purposes [Metric], **02.01**
B 100–92 Specification for Rolled Copper-Alloy Bearing and Expansion Plates and Sheets for Bridge and Other Structural Uses, **02.01**
B 101–92 Specification for Lead-Coated Copper Sheet and Strip for Building Construction, **02.01, 02.04**
B 102–93 Specification for Lead and Tin Alloy Die Castings, **02.04**
B 103/B103M–91 Specification for Phosphor Bronze Plate, Sheet, Strip, and Rolled Bar, **02.01**
B 104 Discontinued—Replaced by B 111
B 105–88 Specification for Hard-Drawn Copper Alloy Wires for Electrical Conductors, **02.01, 02.03**
B 106–90 Test Method for Flexivity of Thermostat Metals, **03.04**
B 107M Discontinued 1992—Replaced by B 107/B 107M: Specification for Magnesium-Alloy Extended Bars, Rods, Shapes, Tubes and Wire [Metric]
B 107/B107M–92 Specification for Magnesium-Alloy Extruded Bars, Rods, Shapes, Tubes, and Wire, **02.02**
B 108–92a Specification for Aluminum-Alloy Permanent Mold Castings, **02.02**
B 109 Discontinued—Replaced by B 209
B 110 Discontinued
B 111–93 Specification for Copper and Copper-Alloy Seamless Condenser Tubes and Ferrule Stock, **02.01**
B 111M–93 Specification for Copper and Copper-Alloy Seamless Condenser Tubes and Ferrule Stock [Metric], **02.01**
B 112 Discontinued—Replaced by B 179
B 113 Redesignated F 113
B 114–90 Test Method for Temperature-Resistance Constants of Sheet Materials for Shunts and Precision Resistors, **03.04**
B 115–93 Specification for Electrolytic Cathode Copper, **02.01**
B 116–64(1990)$^{\epsilon 1}$ Specification for Figure-9 Deep-Section Grooved and Figure-8 Copper Trolley Wire for Industrial Haulage, **02.03**
B 117–90 Test Method of Salt Spray (Fog) Testing, **02.05, 03.02, 06.01**
B 118 Discontinued

D 2438–89 Test Method for Silica in Cellulose, **06.03**
D 2439–91 Specification for Refined Phenol, **06.04**
D 2440–93 Test Method for Oxidation Stability of Mineral Insulating Oil, **10.03**
D 2441–89 Test Method for Hydrolyzable Chlorine Compounds in Chlorinated Aromatic Hydrocarbons (Askarels) by Refluxing, **10.03**
D 2442–75(1991)$^{\epsilon 1}$ Specification for Alumina Ceramics for Electrical and Electronic Applications, **15.02**
D 2443–85 Method of Testing Lacing Twines and Tapes Used as Harnesses in Electrical Equipment, **10.01**
D 2444–92 Test Method for Impact Resistance of Thermoplastic Pipe and Fittings by Means of a Tup (Falling Weight), **08.04**
D 2445 Discontinued—Replaced by D 3012
D 2446 Discontinued
D 2447–89 Specification for Polyethylene (PE) Plastic Pipe, Schedules 40 and 80 Based on Outside Diameter, **08.04**
D 2448–85(1989) Test Method for Water-Soluble Salts in Pigments by Measuring the Specific Resistance of the Leachate of the Pigment, **06.03**
D 2449–88 Specification for Rubber Bales from Natural Sources—Limit on Coating, **09.01**
D 2450–87(1993)$^{\epsilon 1}$ Test Method for Bond of Oil- and Resin-Base Caulking Compounds, **04.07**
D 2451–75(1993) Test Method for Degree of Set for Glazing Compounds on Metal Sash, **04.07**
D 2452–75(1993) Test Method for Extrudability of Oil and Resin-Base Caulking Compounds, **04.07**
D 2453–87(1993) Test Method for Shrinkage and Tenacity of Oil and Resin-Base Caulking Compounds, **04.07**
D 2454–91 Practice for Determining the Effect of Overbaking on Organic Coatings, **06.01**
D 2455–89 Test Method for Identification of Carboxylic Acids in Alkyd Resins, **06.03**
D 2456–91 Test Method for Identification of Polyhydric Alcohols in Alkyd Resins, **06.03**
D 2457–90 Test Method for Specular Gloss of Plastic Films and Solid Plastics, **08.02**
D 2458 Discontinued
D 2459 Discontinued
D 2460–90 Test Method for Radionuclides of Radium in Water, **11.02, 12.01**
D 2461 Discontinued
D 2462–90 Test Method for Moisture in Wool by Distillation with Toluene, **07.01**
D 2463–90 Test Method for Drop Impact Resistance of Blow-Molded Thermoplastic Containers, **08.02**
D 2464–90 Specification for Threaded Poly(Vinyl Chloride) (PVC) Plastic Pipe Fittings, Schedule 80, **08.04**
D 2465 Discontinued
D 2466–90a$^{\epsilon 1}$ Specification for Poly(Vinyl Chloride) (PVC) Plastic Pipe Fittings, Schedule 40, **08.04**
D 2467–92 Specification for Socket-Type Poly(Vinyl Chloride) (PVC) Plastic Pipe Fittings, Schedule 80, **08.04**
D 2468–90 Specification for Acrylonitrile-Butadiene-Styrene (ABS) Plastic Pipe Fittings, Schedule 40, **08.04**
D 2469 Discontinued
D 2470 Discontinued 1989: Method of Measurement of Delayed Neutron-Emitting Fission Products in Nuclear Reactor Coolant Water During Reactor Operation
D 2471–88 Test Method for Gel Time and Peak Exothermic Temperature of Reacting Thermosetting Resins, **08.02**
D 2472–92 Specification for Sulfur Hexafluoride, **10.03**
D 2473 Discontinued—Replaced by D 3935
D 2474–92 Specification for Vinyl Chloride Copolymer Resins, **08.02**
D 2475–88(1993) Specification for Wool Felt, **07.01**
D 2476 Discontinued 1992—Replaced by D 4107: Test Method for Tritium in Water
D 2477–84(1990) Test Method for Dielectric Breakdown Voltage and Dielectric Strength of Insulating Gases at Commercial Power Frequencies, **10.03**
D 2478 Discontinued—Replaced by F 547
D 2479 Discontinued
D 2480 Discontinued 1992: Test Method for Maturity Index and Linear Density of Cotton Fibers by the Causticaire Method
D 2481–81(1986) Method for Accelerated Evaluation of Wood Preservatives for Marine Service by Means of Small-Size Specimens, **04.09**
D 2482–91 Method for Wax Pick Test for Surface Strength of Paper, **15.09**
D 2483 Discontinued
D 2484–89 Specification for Polyester Film Pressure-Sensitive Electrical Insulating Tape, **10.01**
D 2485–91 Test Methods for Evaluating Coatings for High-Temperature Service, **06.01**
D 2486–89 Test Method for Scrub Resistance of Interior Latex Flat Wall Paints, **06.02**
D 2487–92 Classification of Soils for Engineering Purposes, **04.08, 08.04**
D 2488–90 Practice for Description and Identification of Soils (Visual-Manual Procedure), **04.08, 08.04**
D 2489–84(1989) Test Method for Degree of Particle Coating of Bituminous-Aggregate Mixtures, **04.03**
D 2490 Discontinued—Replaced by D 3402
D 2491 Discontinued
D 2492–90 Test Method for Forms of Sulfur in Coal, **05.05**
D 2493–91 Viscosity-Temperature Chart for Asphalts, **04.03**
D 2494–89 Test Method for Commercial Mass of a Shipment of Yarn or Man-Made Staple Fiber or Tow, **07.01**
D 2495–87(1993) Test Method for Moisture in Cotton by Oven-Drying, **07.01**
D 2496 Discontinued
D 2497–80(1990) Tolerances for Man-Made Organic-Base Filament Single Yarns, **07.01**
D 2498 Discontinued
D 2499 Redesignated F 316
D 2500–91 Test Method for Cloud Point of Petroleum Oils, **05.01**
D 2501–91 Test Method for Calculation of Viscosity-Gravity Constant (VGC) of Petroleum Oils, **05.01**
D 2502–92 Method for Estimation of Molecular Weight of Petroleum Oils from Viscosity Measurements, **05.01**
D 2503–92 Test Method for Molecular Weight of Hydrocarbons by Thermoelectric Measurement of Vapor Pressure, **05.01**
D 2504–88 Test Method for Noncondensable Gases in C_3 and Lighter Hydrocarbon Products by Gas Chromatography, **05.01**
D 2505–88 Test Method for Ethylene, Other Hydrocarbons, and Carbon Dioxide in High-Purity Ethylene by Gas Chromatography, **05.01**
D 2506–80(1989) Terminology Relating to Solid Rocket Propulsion, **15.03**
D 2507–93 Terminology of Rheological Properties of Gelled Rocket Propellants, **15.03**
D 2508–93 Test Method for Solid Rocket Propellant Specific Impulse Measurements, **15.03**
D 2509–91 Test Method for Measurement of Load-Carrying Capacity of Lubricating Grease (Timken Method), **05.01**
D 2510–83 Practice for Adhesion of Solid Film Lubricants, **05.01**
D 2511–83 Practice for Thermal Shock Sensitivity of Solid Film Lubricants, **05.01**
D 2512–82 Test Method for Compatibility of Materials with Liquid Oxygen (Impact Sensitivity Threshold and Pass-Fail Technique), **15.03**
D 2513–91a Specification for Thermoplastic Gas Pressure Pipe Tubing and Fittings, **08.04**
D 2514 Discontinued
D 2515 Redesignated D 446
D 2516 Discontinued—Replaced by D 1765
D 2517–81(1987) Specification for Reinforced Epoxy Resin Gas Pressure Pipe and Fittings, **08.04**
D 2518–90 Specification for Woven Glass Fabrics for Electrical Insulation, **10.02**
D 2519–91 Test Method for Bond Strength of Electrical Insulating Varnishes by the Helical Coil Test, **10.02**
D 2520–86(1990)$^{\epsilon 1}$ Test Methods for Complex Permitivity (Dielectric Constant) of Solid Electrical Insulating Materials at Microwave Frequencies and Temperatures to 1650°C, **10.02**
D 2521–76(1989)$^{\epsilon 1}$ Specification for Asphalt Used in Canal, Ditch, and Pond Lining, **04.04**
D 2522–89 Test Method for Chlorine Content of Polybutenes Used for Electrical Insulation, **10.03**
D 2523–78(1989)$^{\epsilon 1}$ Practice for Testing Load-Strain Properties of Roofing Membranes, **04.04**
D 2524–91 Test Method for Breaking Tenacity of Wool Fibers, Flat Bundle Method—⅛-in. (3.2 mm) Gage Length, **07.01**
D 2525–90 Practice for Sampling Wool for Moisture, **07.01**
D 2526–90 Specification for Ozone-Resisting Silicone Rubber Insulation for Wire and Cable, **10.02**
D 2527–83(1992) Specification for Rubber Seals—Splice Strength, **09.02**
D 2528 Discontinued
D 2529 Discontinued
D 2530 Discontinued 1989: Specification for Nonoriented Propylene Plastic Film
D 2531 Discontinued
D 2532–87$^{\epsilon 1}$ Test Method for Viscosity and Viscosity Change After Standing at Low Temperature of Aircraft Tubrine Lubricants, **05.01**
D 2533–90 Test Method for Vapor Liquid Ratio of Spark-Ignition Engine Fuels, **05.01**
D 2534–88 Test Method for Coefficient of Kinetic Friction for Wax Coatings, **05.01**
D 2535 Redesignated F 304
D 2536 Redesignated F 305
D 2537 Redesignated F 306
D 2538–88 Test Method for Fusion of Poly(Vinyl Chloride) (PVC) Resins Using a Torque Rheometer, **08.02**
D 2539–93 Test Method for Shock Sensitivity of Liquid Monopropellants by the Card Gap Test, **15.03**
D 2540–93 Test Method for Drop Weight Sensitivity of Liquid Monopropellants, **15.03**
D 2541–93 Test Method for Critical Diameter and Detonation Velocity of Liquid Monopropellants, **15.03**
D 2542 Redesignated F 309
D 2543 Redesignated F 310
D 2544 Redesignated F 307
D 2545 Redesignated F 308
D 2546 Redesignated F 315
D 2547 Discontinued 1991: Test Method for Lead in Gasoline, Volumetric Chromate Method
D 2548 Discontinued—Replaced by D 3712
D 2549–91 Test Method for Separation of Representative Aromatics and Nonaromatics Fractions of High-Boiling Oils by Elution Chromatography, **05.01**

D 3682–91 Test Method for Major and Minor Elements in Coal and Coke Ash by the Atomic Absorption Method, **05.05**
D 3683–78(1989) Test Method for Trace Elements in Coal and Coke Ash by the Atomic Absorption Method, **05.05**
D 3684–78(1988) Test Method for Total Mercury in Coal by the Oxygen Bomb Combustion/Atomic Absorption Method, **05.05**
D 3685/D3685M–92 Test Method for Particulates Independently or for Particulates and Collected Residue Simultaneously in Stack Gases, **11.03**
D 3686–89 Practice for Sampling Atmospheres to Collect Organic Compound Vapors (Activated Charcoal Tube Adsorption Method), **11.03**
D 3687–89 Practice for Analysis of Organic Compound Vapors Collected by the Activated Charcoal Tube Adsorption Methods, **11.03**
D 3688 Discontinued 1991: Guide for Reporting the Characterization of Smoking Product Atmospheres Used to Expose Biological Systems
D 3689–90 Method of Testing Individual Piles Under Static Axial Tensile Load, **04.08**
D 3690–78(1990) Peformance Specification for Vinyl-Coated and Urethane-Coated Upholstery Fabrics, **07.02**
D 3691–78(1990) Performance Specification for Woven, Lace, and Knit Household Curtain and Drapery Fabrics, **07.02**
D 3692–89 Practice for Selection of Zippers for Care-Labeled Apparel and Household Furnishings, **07.02**
D 3693–91 Specification for Labeled Length per Holder of Sewing Thread, **07.01**
D 3694–92 Practices for Preparation of Sample Containers and for Preservation of Organic Constituents, **11.02**
D 3695–88 Test Method for Volatile Alcohols in Water by Direct Aqueous-Injection Gas Chromatography, **11.02**
D 3696–89 Practice for Evaluating an Effluent for Flavor Impairment to Fish Flesh, **11.04**
D 3697–92 Test Method for Antimony in Water, **11.01**
D 3698–92 Practice for Solvent Vapor Degreasing Operations, **15.05**
D 3699–92 Specification for Kerosine, **05.02**
D 3700–78(1988)$^{\epsilon 1}$ Test Method for Obtaining Hydrocarbon Fluid Samples Using a Floating Piston Cylinder, **05.02**
D 3701–92 Test Method for Hydrogen Content of Aviation Turbine Fuels by Low Resolution Nuclear Magnetic Resonance Spectrometry, **05.02**
D 3702–90 Test Method for Wear Rate of Materials in Unlubricated Rubbing Contact Using a Thrust Washer Testing Machine, **05.02**
D 3703–92 Test Method for Peroxide Number of Aviation Turbine Fuels, **05.02**
D 3704–90 Test Method for Wear Preventive Properties of Lubrication Greases Using the (Falex) Ring and Block Test Machine in Oscillating Motion, **05.02**
D 3705–86 Test Method for Misting Properties of Lubricating Fluids, **05.02**
D 3706–88 Test Method for Hot Tack of Wax-Polymer Blends by the Flat Spring Test, **05.02**
D 3707–89 Test Method for Storage Stability of Water-in-Oil Emulsions by the Oven Test Method, **05.02**
D 3708–88 Test Method for Weight of Wax Applied During Curtain Coating Operation, **05.02**
D 3709–89 Test Method for Stability of Water-in-Oil Emulsions Under Low to Ambient Temperature Cycling Conditions, **05.02**
D 3710–83 Test Method for Boiling Range Distribution of Gasoline and Gasoline Fractions by Gas Chromatography, **05.02**
D 3711–87 Test Method for Deposition Tendencies of Liquids in Thin Films and Vapors, **05.02**
D 3712–91 Test Method for Analysis of Oil-Soluble Petroleum Sulfonates by Liquid Chromatography, **05.02**
D 3713–78(1988)$^{\epsilon 1}$ Test Method for Measuring Response of Solid Plastics to Ignition by a Small Flame, **08.02, 10.02**
D 3714–87 Test Method for Black Marking Resistance of Floor Polishes as Measured by the Ladder and Pendulum Apparatus, **15.04**
D 3715–88 Practice for Quality Assurance of Pressure-Sensitive Tapes, **15.09**
D 3716–83(1988) Methods of Testing Emulsion Polymers for Use in Floor Polishes, **15.04**
D 3717–85a(1991)$^{\epsilon 1}$ Test Method for Low Concentrations of Antimony in Paint by Atomic Absorption Spectroscopy, **06.01**
D 3718–85a(1991)$^{\epsilon 1}$ Test Method for Low Concentrations of Chromium in Paint by Atomic Absorption Spectroscopy, **06.01**
D 3719–87 Test Method for Quantifying Dirt Collection on Coated Exterior Panels, **06.02**
D 3720–90 Test Method for Ratio of Anatase to Rutile in Titanium Dioxide Pigments by X-Ray Diffraction, **06.01**
D 3721–83(1991)$^{\epsilon 1}$ Specification for Synthetic Red Iron Oxide Pigment, **06.03**
D 3722–82(1991)$^{\epsilon 1}$ Specification for Natural Red and Brown Iron Oxide Pigments, **06.03**
D 3723–84(1990) Test Method for Pigment Content of Water Emulsion Paints by Low-Temperature Ashing, **06.01**
D 3724–82(1987)$^{\epsilon 1}$ Specification for Synthetic Brown Iron Oxide Pigment, **06.03**
D 3725–78(1992)$^{\epsilon 1}$ Test Method for Semiquantitative Determination of Fish Oil in Drying Oils and Drying Oil Fatty Acids by Gas-Liquid Chromatography, **06.03**
D 3726 Discontinued—Replaced by D 4615
D 3727 Discontinued—Replaced by D 4614
D 3728–88 Specification for 2-Ethoxyethyl Acetate (99.5 % Grade), **06.04**
D 3729 Discontinued 1990—Replaced by D 740: Specification for Methyl Ethyl Ketone (99.5 % Grade)
D 3730–78(1988)$^{\epsilon 1}$ Guide for Testing High-Performance Interior Architectural Wall Coatings, **06.02**
D 3731–87(1993)$^{\epsilon 1}$ Practice for Measurement of Chlorophyll Content of Algae in Surface Waters, **11.04**
D 3732–82(1989)$^{\epsilon 1}$ Practice for Reporting Cure Times of Ultraviolet-Cured Coatings, **06.02**
D 3733–78(1984)$^{\epsilon 1}$ Test Method for Silicon Content of Silicone Polymers and Silicone-Modified Alkyds by Atomic Absorption, **06.03**
D 3734–91 Specification for High-Flash Aromatic Naphthas, **06.04**
D 3735–92 Specification for VM&P Naphthas, **06.04**
D 3736 Discontinued—Replaced by D 4194
D 3737–93 Test Method for Establishing Stresses for Structural Glued Laminated Timber (Glulam), **04.09**
D 3738–84(1990) Specification for Rubber-Coated Cloth Hospital Sheeting, **09.02**
D 3739–88 Practice for Calculation and Adjustment of the Langelier Saturation Index for Reverse Osmosis, **11.02**
D 3740–92 Practice for Evaluation of Agencies Engaged in Testing and/or Inspection of Soil and Rock as Used in Engineering Design and Construction, **04.08**
D 3741–85(1991)$^{\epsilon 1}$ Test Method for Appearance of Admixtures Containing Halogenated Organic Solvents, **15.05**
D 3742–89 Test Method for 1,1,1-Trichloroethane Content, **15.05**
D 3743–84(1990) Definitions of Terms Relating to Bridge Deck and Substructure Protection, **04.03**
D 3744–85 Test Method for Aggregate Durability Index, **04.03**
D 3745–78(1989)$^{\epsilon 1}$ Practice for Installation of Prefabricated Asphalt Reservoir, Pond, Canal, and Ditch Liner (Exposed Type), **04.04**
D 3746–85(1991) Test Method for Impact Resistance of Bituminous Roofing Systems, **04.04**
D 3747–79(1990) Specification for Emulsified Asphalt Adhesive for Adhering Roof Insulation, **04.04**
D 3748–83 Practice for Evaluating High-Density Rigid Cellular Thermoplastics, **08.02**
D 3749–87 Test Method for Residual Vinyl Chloride Monomer in Poly(Vinyl Chloride) Homopolymer Resins by Gas Chromatographic Headspace Technique, **08.02**
D 3750 Discontinued 1992: Practice for Determination of Number-Average Molecular Weight of Polymers by Membrane Osmometry
D 3751–89a Practice for Evaluation of Furniture Polish, **15.04**
D 3752–90 Test Method for Strength Impaired by Asbestos to a Matrix, **04.05, 08.02**
D 3753–81(1991) Specification for Glass Fiber-Reinforced Polyester Manholes, **08.04**
D 3754–91 Specification for Fiberglass Sewer and Industrial Pressure Pipe, **08.04**
D 3755–86(1990)$^{\epsilon 1}$ Test Method for Dielectric Breakdown Voltage and Dielectric Strength of Solid Electrical Insulating Materials Under Direct-Voltage Stress, **10.02**
D 3756–90 Test Method for Evaluation of Resistance to Electrical Breakdown by Treeing in Solid Dielectric Materials Using Diverging Fields, **10.02**
D 3757–89 Guide for Preparing Specifications for Solvent Floor Polishes, **15.04**
D 3758–85(1989) Practice for Evaluation of Spray-Buff Products on Test Floors, **15.04**
D 3759–88$^{\epsilon 1}$ Test Method for Tensile Strength and Elongation of Pressure-Sensitive Tapes, **15.09**
D 3759M–88$^{\epsilon 1}$ Test Method for Tensile Strength and Elongation of Pressure-Sensitive Tapes [Metric], **15.09**
D 3760–79(1984) Method for Analysis of Isopropyl Benzene (Cumene) by Gas Chromatography, **06.04**
D 3761–91 Test Method for Total Fluorine in Coal by the Oxygen Bomb Combustion/Ion Selective Electrode Method, **05.05**
D 3762–79(1993)$^{\epsilon 1}$ Test Method for Adhesive-Bonded Surface Durability of Aluminum (Wedge Test), **15.06**
D 3763–92 Test Method for High-Speed Puncture Properties of Plastics Using Load and Displacement Sensors, **08.02**
D 3764–92 Practice for Validation of Process Stream Analyzers, **05.02**
D 3765–92a Test Method for Carbon Black—CTAB (Cetyltrimethylammonium Bromide) Surface Area, **09.01**
D 3766–86 Definitions of Terms Relating to Catalysts and Catalysis, **05.03**
D 3767–84(1992) Practice for Rubber—Measurement of Dimensions, **09.01**
D 3768–85(1990) Method for Testing Microcellular Urethanes—Flexural Recovery, **09.02**
D 3769–85(1990) Method for Testing Microcellular Urethanes—High-Temperature Sag, **09.02**
D 3770–91 Specification for Flexible Cellular Materials—High Resilience Polyurethane Foam (HR) and Combustion Modified High Resilience (MHR) Polyurethane Foam (HR), **09.02**
D 3771–85(1990) Specification for Rubber Seals Used in Concentrating Solar Collectors, **09.02**
D 3772–86(1991)$^{\epsilon 1}$ Specification for Rubber Finger Cots, **09.02**
D 3773–90 Test Method for Length of Woven Fabric, **07.02**
D 3774–89 Test Method for Width of Woven Fabric, **07.02**
D 3775–85(1990) Test Method for Fabric Count of Woven Fabric, **07.02**
D 3776–85(1990) Test Methods for Mass per Unit Area (Weight) of Woven Fabric, **07.02**
D 3777–91 Practice for Writing Specifications for Textiles, **07.02**

D 5311–92 Test Method for Load Controlled Cyclic Triaxial Strength of Soil, **04.08**
D 5312–92 Test Method for Evaluation of Durability of Rock for Erosion Control under Freezing and Thawing Conditions, **04.08**
D 5313–92 Test Method for Evaluation of Durability of Rock for Erosion Control Under Wetting and Drying Conditions, **04.08**
D 5314–92 Guide for Soil Gas Monitoring In The Vadose Zone, **04.08**
D 5315–92 Test Method for *n*-Methyl-Carbamoyloximes and *n*-Methylcarbamates in Water by Direct Aqueous Injection HPLC with Post Column Derivatization, **11.02**
D 5316–92 Test Method for 1,2-Dibromoethane and 1,2-Dibromo-3-Chloropropane in Water by Microextraction and Gas Chromatography, **11.02**
D 5317–92 Test Method for the Determination of Chlorinated Organic Acid Compounds in Water by Gas Chromatography with a Capture Detector, **11.02**
D 5318–92 Test Method For Hydrolyzable Chloride In Peroxy Esters And Peroxy Dicarbonates, **08.03**
D 5319–92 Specification For Glass-Fiber Reinforced Polyester Wall And Ceiling Panels, **08.04**
D 5320–92 Test Method for Determination of 1,1,1-Trichloroethane and Methylene Chloride Content in Stabilized Trichloroethylene and Tetrachloroethylene, **15.05**
D 5321–92 Test Method for Determining the Coefficient of Soil and Geosynthetic or Geosynthetic and Geosynthetic Friction by the Direct Shear Method, **04.08**
D 5322–92 Practice for Immersion Procedures for Evaluating the Chemical Resistance of Geosynthetics to Liquids, **04.08**
D 5323–92 Practice for Determination of 2 % Secant Modulus for Polyethylene Geomembranes, **04.08**
D 5324–92 Guide to Testing Water-Borne Architectural Coatings, **06.02**
D 5325–92 Test Method for the Determination of Weight Percent Volatile Content of Water-Borne Aerosol Paints, **06.01**
D 5326–92 Test Method for Color Development In Tinted Latex Paints, **06.02**
D 5327–92 Practice for Evaluating and Comparing Transfer Efficiency under General Laboratory Conditions, **06.02**
D 5328–92 Test Method for Volatile Organic Compound (VOC40) Content of Non-Heatset Paste Printing Ink Systems at 40°C, **06.02**
D 5329–92 Test Methods for Sealants and Fillers, Hot-Applied, for Joints and Cracks in Asphaltic and Portland Cement Concrete Pavements, **04.03**
D 5330–92 Specification For Tape, Pressure-Sensitive, Packaging, Filament Reinforced, **15.09**
D 5331–92 Test Method for Evaluation of Mechanical Handling of Unitized Loads Secured with Stretch Wrap Materials, **15.09**
D 5332–92 Test Method for Fiber Length and Length Distribution of Cotton and Man-Made Staple Fibers, **07.02**
D 5333–92 Test Method for Measurement of Collapse Potential of Soils, **04.08**
D 5334–92 Test Method for Determination of Thermal Conductivity of Soil and Soft Rock by Thermal Needle Probe Procedure, **04.08**
D 5335–92 Test Method for Linear Coefficient of Thermal Expansion of Rock Using Bonded Electric Resistance Strain Gages, **04.08**
D 5336–93 Specification for Polyphthalamide (PPA) Injection Molding Materials, **08.03**
D 5337–92 Practice for Flow Rate for Calibration of Personal Sampling Pumps, **11.03**
D 5338–92 Test Method for Determining Aerobic Biodegradation of Plastic Materials Under Controlled Composting Conditions, **08.03**
D 5340–93 Test Method for Airport Pavement Condition Index Surveys, **04.03**
D 5341–93 Test Method for Measuring Coke Reactivity Index (CRI) and Coke Strength After Reaction (CSR), **05.05**
D 5342–93 Test Method for Resistance to Bending of Paper and Paperboard (Taber-Type Tester), **15.09**
D 5343–93 Guide for Evaluating Cleaning Performance of Ceramic Tile Cleaners, **15.04**
D 5344–93 Test Method for Extension Force of Partially Oriented Yarn, **07.02**
D 5345–93 Specification for a Prediluted Aqueous Ethylene Glycol Base Low-Silicate Engine Coolant (50 Volume Percent Minimum) for Heavy-Duty Engines Requiring an Initial Charge of Supplemental Coolant Additive (SCA), **15.05**
D 5346–93 Test Method for Determination of the Pour Point of Petroleum Oil Used in Fatliquors and Softening Compounds, **15.04**
D 5347–93 Test Method for Determination of the Ash Content Of Fats And Oils, **15.04**
D 5348–93 Test Method for Determination of the Moisture Content of Sulfonated and Sulfated Oils By Distillation with Xylene, **15.04**
D 5349–93 Test Method for Determination of the moisture and Volatile Content of Sulfonated And Sulfated Oils by Hot-Plate Method, **15.04**
D 5350–93 Test Method for Determination of Organically Combined Sulfuric Anhydride by Titration, Test Method A, **15.04**
D 5351–93 Test Method for Determination of Organically Combined Sulfuric Anhydride by Extraction Titration, Test Method B, **15.04**
D 5352–93 Test Method for Determination of Organically Combined Sulfuric Anhydride by Ash-Gravimetric, Test Method C, **15.04**
D 5353–93 Test Method for Determination of Total Desulfated Fatty Matter, **15.04**
D 5354–93 Test Method for Determination of Total Active Ingredients In Sulfonated And Sulfated Oils, **15.04**
D 5355–93 Test Method for Specific Gravity of Oils and Liquid Fats, **15.04**
D 5356–93 Test Method for PH of Chrome Tanning Solutions, **15.04**
D 5357–93 Test Method for Determination of Relative Crystallinity of Zeolite Sodium A by X-Ray Diffraction, **05.03**
D 5358–93 Practice for Sampling with a Dipper or Pond Sampler, **11.04**
D 5359–93 Specification for Glass Cullet Recovered from Waste for Use in Manufacture of Glass Fiber, **11.04**
D 5360–93 Practice for Design and Construction of Bituminous Surface Treatments, **04.03**
D 5361–93 Practice for Sampling Compacted Bituminous Mixtures for Laboratory Testing, **04.03**
D 5362–93 Test Method for Snagging Resistance of Fabrics (Bean Bag Test Method), **07.02**
D 5363–93 Specification for Anaerobic Single-Component Adhesives (AN), **15.06**
D 5366–93 Test Method for Determining the Dynamic Performance of a Wind Vane, **11.03**
D 5368–93 Test Method for the Gravimetric Determination of Total Solvent Extractable Content (TSEC) of Solid Waste Samples, **11.04**
D 5369–93 Practice for the Extraction of Solid Waste Samples for Chemical Analysis Using Soxhlet Extraction, **11.04**
D 5373–93 Test Methods for Instrumental Determination of Carbon, Hydrogen, and Nitrogen in Laboratory Samples of Coal And Coke, **05.05**
D 5376–93 Test Method for Rubber Chemicals– Determination of the Percent Nitrogen in Rubber Antioxidant: Polymerised TMQ, **09.01**
D 5377–93 Classification for Rubber Compounding Materials–Ground Coal, **09.01**
D 5378–93 Performance Specification for Woven and Knitted Shower Curtains for Institutional and Household Use, **07.02**
D 5379–93 Test Method for Shear Properties of Composite Materials by the V-Notched Beam Method, **15.03**
D 5394–93 Specification for Reclaimed 1,1,1 Trichloroethane, **15.05**
D 5395–93 Specification for Reclaimed Methylene Chloride, **15.05**
D 5396–93 Specification for Reclaimed Perchloroethylene, **15.05**
D 5417–93 Practice for the Operation of the Vettermann Drum Tester, **07.02**
D 5426–93 Practice for Visual Inspection and Grading of Fabrics Used for Inflatable Restraints, **07.02**
D 5427–93 Practice for Accelerated Aging of Inflatable Restraint Fabrics, **07.02**
D 5428–93 Practice for Evaluating the Dynamic Performance of Inflatable Restraint Modules, **07.02**
D 5429–93 Practice for Pretreatment of Backing Fabrics Used in Textile Conservation Research, **07.02**
D 5430–93 Test Methods for Visually Inspecting and Grading Fabrics, **07.02**
D 5431–93 Performance Specification for Woven and Knitted Sheeting Products for Institutional and Household Use, **07.02**
D 5432–93 Performance Specification for Blanket Products for Institutional and Household Use, **07.02**
D 5433–93 Performance Specification for Towel Products for Institutional and Household Use, **07.02**

E 636–83$^{\epsilon 1}$ Practice for Conducting Supplemental Surveillance Tests for Nuclear Power Reactor Vessels, **12.02**
E 637–78(1990)$^{\epsilon 1}$ Method for Calculation of Stagnation Enthalpy from Heat Transfer Theory and Experimental Measurements of Stagnation-Point Heat Transfer and Pressure, **15.03**
E 638–78(1992) Test Method for Calibration of Heat Transfer Rate Calorimeters Using a Narrow-Angle Blackbody Radiation Facility, **15.03**
E 639–78(1990)$^{\epsilon 1}$ Test Method for Measuring Total-Radiance Temperature of Heated Surfaces Using a Radiation Pyrometer, **15.03**
E 640–78(1991)$^{\epsilon 1}$ Test Method for Preservatives in Water-Containing Cosmetics, **11.04**
E 641–85(1991)$^{\epsilon 1}$ Method of Testing Agricultural Hydraulic Spray Nozzles, **11.04**
E 642–91 Practice for Determining Application Rates and Distribution Patterns from Agricultural Aircraft, **11.04**
E 643–84(1990) Test Method for Ball Punch Deformation of Metallic Sheet Material, **03.01**
E 644–91 Method of Testing Industrial Resistance Thermometers, **14.03**
E 645–91 Test Method for Efficacy of Microbicides Used in Cooling Systems, **11.04**
E 646–91 Test Method for Tensile Strain-Hardening Exponents (*n*-Values) of Metallic Sheet Materials, **03.01**
E 647–93 Test Method for Measurements of Fatigue Crack Growth Rates, **03.01**
E 648–93a Test Method for Critical Radiant Flux of Floor Covering Systems Using a Radiant Heat Energy Source, **04.07**
E 649–84(1989)$^{\epsilon 1}$ Test Method for Bromine in Chlorine, **15.05**
E 650–85(1992)$^{\epsilon 1}$ Guide for Mounting Piezoelectric Acoustic Emission Sensors, **03.03**
E 651–92 Guidelines for Evaluating Capabilities of Agencies Involved in System Analysis and Compliance Assurance for Manufactured Building, **04.07**
E 652–91 Method for Testing Nonresidual Liquid Household Insecticides Against Flying Insects, **11.04**
E 653–91 Method of Testing Effectiveness of Aerosol and Pressurized Space Spray Insecticides Against Flying Insects, **11.04**
E 654–90 Method of Testing Effectiveness of Aerosol and Pressurized Spray Insecticides Against Cockroaches, **11.04**
E 655–91 Guidelines for Evaluation of Nematicides Against Root-Knot Nematode—Population Eradication Test, **11.04**
E 656–91 Guidelines for Evaluation of Hatching Heterodera Schachtii Larvae, **11.04**
E 657–78(1989)$^{\epsilon 1}$ Test Method for Comparative Acute and Long-Term Oral or Gustatory Asian Repellency, **11.04**
E 658–78(1989) Test Method for Efficacy of Dog Repellents Designed to be Directly Applied to Garbage Bags, **11.04**
E 659–78(1989)$^{\epsilon 1}$ Test Method for Autoignition Temperature of Liquid Chemicals, **05.03, 14.02**
E 660–90 Practice for Accelerated Polishing of Aggregates or Pavement Surfaces Using a Small-Wheel, Circular Track, Polishing Machine, **04.03**
E 661–88(1992) Test Method for Performance of Wood and Wood-Based Floor and Roof Sheathing Under Concentrated Static and Impact Loads, **04.07**
E 662–93 Test Method for Specific Optical Density of Smoke Generated by Solid Materials, **04.07**
E 663–86(1991)$^{\epsilon 1}$ Practice for Flame Atomic Absorption Analysis, **03.06**
E 664–78(1989)$^{\epsilon 1}$ Practice for the Measurement of the Apparent Attenuation of Longitudinal Ultrasonic Waves by Immersion Method, **03.03**
E 665–78(1984) Practice for Determining Absorbed Dose Versus Depth in Materials Exposed to the X-Ray Output of Flash X-Ray Machines, **12.02**
E 666–91 Practice for Calculating Absorbed Dose from Gamma or X Radiation, **12.02**
E 667–86(1991) Specification for Clinical Thermometers (Maximum Self-Registering, Mercury-in-Glass), **14.03**
E 668–93 Practice for Application of Thermoluminescence-Dosimetry (TLD) Systems for Determining Absorbed Dose in Radiation-Hardness Testing of Electronic Devices, **10.04, 12.02**
E 669–91 Master Matrix for Nuclear Fuel Cycle Standards, **12.01**
E 670–92 Test Method for Side Force Friction on Paved Surfaces Using the Mu-Meter, **04.03**
E 671–79(1989) Specification for Maximum Permissible Thermal Residual Stress in Annealed Glass Laboratory Apparatus, **14.02**
E 672–87(1992) Specification for Disposable Glass Micropipets, **14.02**
E 673–91c Terminology Relating to Surface Analysis, **03.06**
E 674–80(1990) Specification for Industrial Perforated Plate and Screens (Round Opening Series), **01.03, 14.02**
E 675–84(1989) Specification for Interchangeable Stopcocks and Stoppers, **14.02**
E 676–84(1989) Specification for Interchangeable Taper-Ground Joints, **14.02**
E 677–80(1991) Specification for Interchangeable Spherical Ground Joints, **14.02**
E 678–90 Practice for Evaluation of Technical Data, **14.02**
E 679–91 Practice for Determination of Odor and Taste Thresholds by a Forced Choice Ascending Concentration Series Method of Limits, **15.07**
E 680–79(1992) Test Method for Drop Weight Impact Sensitivity of Solid-Phase Hazardous Materials, **14.02**
E 681–85(1991) Test Method for Limits of Flammability of Chemicals, **14.02**
E 682–92 Practice for Liquid Chromatography Terms and Relationships, **14.01**
E 683–91 Practice for Installation and Service of Solar Space Heating Systems for One- and Two-Family Dwellings, **12.02**
E 684–88 Practice for Approximate Determination of Current Density of Large-Diameter Ion Beams for Sputter Depth Profiling of Solid Surfaces, **03.06**
E 685–79 Practice for Testing Fixed-Wavelength Photometric Detectors Used in Liquid Chromatography, **14.01**
E 686–91 Method for Evaluation of Antimicrobial Agents in Aqueous Metal Working Fluids, **11.04**
E 687 Discontinued
E 688–79(1988) Method of Testing Waste Glass as a Raw Material for Manufacture of Glass Containers, **11.04**
E 689–90 Reference Radiographs for Ductile Iron Castings, **01.02, 03.03**
E 690–91 Practice for In-Situ Electromagnetic (Eddy Current) Examination of Nonmagnetic Heat Exchanger Tubes, **03.03**
E 691–92 Practice for Conducting an Interlaboratory Study to Determine the Precision of a Test Method, **06.04, 08.03, 14.02**
E 692–79(1985) Test Method for Cesium-137 in Irradiated Nuclear Fuels by High-Resolution Gamma-Ray Spectral Analysis, **12.02**
E 693–79(1985)$^{\epsilon 1}$ Practice for Characterizing Neutron Exposures in Ferritic Steels in Terms of Displacements Per Atom (DPA), **12.02**
E 694–92 Specification for Volumetric Ware, **14.02**
E 695–79(1991) Method for Measuring Relative Resistance of Wall, Floor, and Roof Constructions to Impact Loading, **04.07**
E 696–90 Specification for Tungsten Rhenium Alloy Thermocouple Wire, **14.03**
E 697–91 Practice for Use of Electron-Capture Detectors in Gas Chromatography, **14.01**
E 698–79(1984) Test Method for Arrhenius Kinetic Constants for Thermally Unstable Materials, **14.02**
E 699–79(1991) Practice for Criteria for Evaluation of Agencies Involved in Testing, Quality Assurance, and Evaluating Building Components in Accordance with Test Methods Promulgated by ASTM Committee E-6, **04.07**
E 700–79(1990)$^{\epsilon 1}$ Test Method for Water in Gases Using Karl Fischer Reagent, **15.05**
E 701–80(1990) Method of Testing Municipal Ferrous Scrap, **11.04**
E 702–85(1990) Specification for Municipal Ferrous Scrap, **11.04**
E 703–79(1992)$^{\epsilon 1}$ Practice for Electromagnetic (Eddy Current) Sorting of Nonferrous Metals, **03.03**
E 704–90 Test Method for Measuring Reaction Rates by Radioactivation of Uranium-238, **12.02**
E 705–90 Test Method for Measuring Reaction Rates by Radioactivation of Neptunium-237, **12.02**
E 706–87 Master Matrix for Light-Water Reactor Pressure Vessel Surveillance Standards, **12.02**
E 707–90 Test Method for Skid Resistance of Paved Surfaces Using the North Carolina State University Variable-Speed Friction Tester, **04.03**
E 708–79(1988) Specification for Waste Glass as a Raw Material for the Manufacture of Glass Containers, **11.04**
E 709–91 Practice for Magnetic Particle Examination, **03.03**
E 710–86 Method for Comparing EMF Stabilities of Base-Metal Thermoelements in Air Using Dual, Simultaneous, Thermal-EMF Indicators, **14.03**
E 711–87(1992) Test Method for Gross Calorific Value of Refuse-Derived Fuel by the Bomb Calorimeter, **11.04**
E 712–80(1992)$^{\epsilon 1}$ Practice for Laboratory Screening of Metallic Containment Materials for Use with Liquids in Solar Heating and Cooling Systems, **12.02**
E 713–88 Guide for the Selection of Scales for Metric Building Drawings, **04.07**
E 714–86(1991) Specification for Disposable Glass Serological Pipets, **14.02**
E 715–80(1992) Specification for Gravity-Convection and Forced-Circulation Water Baths, **14.02**
E 716–85(1989) Practices for Sampling of Aluminum and Its Alloys for Spectrochemical Analysis, **02.02, 03.06**
E 717–84(1989) Guide for Preparation of the Accreditation Annex of Acoustical Test Standards, **04.06**
E 718 Discontinued 1992: Method for Spectrographic Analysis of Cartridge Brass
E 719 Discontinued
E 720–93 Guide for Selection and Use of Neutron-Activation Foils for Determining Neutron Spectra Employed in Radiation-Hardness Testing of Electronics, **12.02**
E 721–93 Test Method for Determining Neutron Energy Spectra with Neutron-Activation Foils for Radiation Hardness Testing of Electronics, **12.02**
E 722–93 Practice for Characterizing Neutron Energy Fluence Spectra in Terms of an Equivalent Monoenergetic Neutron Fluence for Radiation-Hardness Testing of Electronics, **12.02**
E 723–91 Test Method for Efficacy of Antimicrobials as Preservatives for Aqueous-Based Products Used in the Paper Industry (Bacterial Spoilage), **11.04**
E 724–89 Guide for Conducting Static Acute Toxicity Test Starting with Embryos of Four Species of Saltwater Bivalve Molluscs, **11.04**
E 725–86(1991)$^{\epsilon 1}$ Test Method for Sampling Granular Carriers and Granular Pesticides, **11.04**
E 726–86(1991)$^{\epsilon 1}$ Test Method for Particle Size Distribution of Granular Carriers or Granular Pesticides, **11.04**
E 727–91 Test Methods for Determining Bulk Density of Granular Carriers and Granular Pesticides, **11.04**

F 947–85(1991) Test Method for Determining Low-Level X-Radiation Sensitivity of Photographic Films, **15.07**
F 948–85 Test Method for Time-To-Failure of Plastic Piping Systems and Components Under Constant Internal Pressure with Flow, **08.04**
F 949–92 Specification for Poly(Vinyl Chloride) (PVC) Corrugated Sewer Pipe with a Smooth Interior and Fittings, **08.04**
F 950–88(1993)$^{\epsilon 1}$ Test Method for Measurement of the Depth of Crystal Damage of a Mechanically Worked Silicon Surface by Angle Polishing and Defect Etching, **10.05**
F 951–92 Test Method for Determination of Radial Interstitial Oxygen Variation, **10.05**
F 952–85(1990) Specification for Mixing Machines, Food Electric, **15.07**
F 953–85(1990) Specification for Commercial Dishwashing Machines (Stationary Rack, Dump Type) Chemical Sanitizing, **15.07**
F 954–91 Specification for Respiratory Home Care, **13.01**
F 955–85(1989)$^{\epsilon 1}$ Test Method for Evaluating Heat Transfer Through Materials for Protective Clothing Upon Contact with Molten Substances, **11.03**
F 956–91 Specification for Bell, Ship's, **01.07**
F 957–91 Specification for Gong, Sound Signaling, **01.07**
F 958–85(1990) Practice for Developing Guides for Using Consumer Products, **15.07**
F 959–90 Specification for Compressible-Washer-Type Direct Tension Indicator for Use With Structural Fasteners, **15.08**
F 960–86 Specification for Medical and Surgical Suction and Drainage Systems, **13.01**
F 961–92 Specification for Cobalt-Nickel-Chromium-Molybdenum Alloy Forgings for Surgical Implant Applications, **13.01**
F 962–86 Specification for Oil Spill Response Boom Connection, **11.04**
F 963–92 Consumer Safety Specification on Toy Safety, **15.07**
F 965–85$^{\epsilon 1}$ Specification for Rigid Laryngoscopes for Tracheal Intubation—Hook-On Fittings for Laryngoscope Handles and Blades with Lamps, **13.01**
F 966–90 Consumer Safety Specification for Full-Size and Non-Full Size Baby Crib Corner Post Extensions, **15.07**
F 967–87 Practice for Security Engineering Symbols, **15.07**
F 968–93 Specification for Electrically Insulating Plastic Guard Equipment for Protection of Workers, **10.03**
F 969–92 Practice for Construction of Chain-Link Tennis Court Fence, **01.06**
F 970–87 Test Method for Static Load Limit, **15.04**
F 971–86(1993)$^{\epsilon 1}$ Guide for Ecological Considerations for the Use of Chemical Dispersants in Oil Spill Response: Mangroves, **11.04**
F 972–86(1993)$^{\epsilon 1}$ Guide for Ecological Considerations for the Use of Chemical Dispersants in Oil Spill Response—Nearshore Subtidal, **11.04**
F 973–86(1993)$^{\epsilon 1}$ Guide for Ecological Considerations for the Use of Chemical Dispersants in Oil Spill Response Tidal Flats, **11.04**
F 974–86(1991) Practice for the Determination of the Color Response of an Electrostatic Copying System, Black and White Output, **15.09**
F 975–86 Specification for Auxiliary Single Stage Steam Turbines for Shipboard Use, **01.07**
F 976–86(1991) Specification for Portable Kerosine Containers for Consumer Use, **15.07**
F 977–89 Consumer Safety Performance Specification for Infant Walkers, **15.07**
F 978–90 Test Method for Characterizing Semiconductor Deep Levels by Transient Capacitance Techniques, **10.05**
F 979–86(1991) Test Method for Hermeticity of Hybrid Microcircuit Packages Prior to Lidding, **10.04**
F 980–92 Guide for the Measurement of Rapid Annealing of Neutron-Induced Displacement Damage in Silicon Semiconductor Devices, **10.04**
F 981–93 Practice for Assessment of Compatibility of Biomaterials (Non-Porous) for Surgical Implants with Respect to Effect of Materials in Muscle and Bone, **13.01**
F 982–86(1993) Specification for Disclosures of Characteristics of Surgically Implanted Clamps for Carotid Occlusion, **13.01**
F 983–86(1991) Practice for Permanent Marking for Orthopedic Implant Components, **13.01**
F 984–86(1992) Specification for Cutaneous Gas Monitoring Devices for Oxygen and Carbon Dioxide, **13.01**
F 985–86(1991) Specification for Panama Canal Pilot Platform, **01.07**
F 986–86(1992) Specification for Suction Strainer Boxes, **01.07**
F 987–86 Specification for Portable Flush Deck Stanchion, **01.07**
F 988 Discontinued 1992: Guide for Specifying Carbon-Fiber Randomly Reinforced Ultra-High-Molecular-Weight Polyethylene for Medical Devices
F 989–86 Methods for Testing Spill Control Barrier Tension Members, **11.04**
F 990–86(1993)$^{\epsilon 1}$ Guides for Ecological Considerations for Use of Chemical Dispersants in Oil Spill Response—Sandy Beaches, **11.04**
F 991–86 Specification for Docking/Drain Plug and Boss Assemblies, **01.07**
F 992–86(1991) Specification for Valve Label Plates, **01.07**
F 993–86(1991) Specification for Valve Locking Devices, **01.07**
F 994–86(1991) Practice for Design and Installation of Over-Board Discharge Hull Penetration Connections, **01.07**
F 995–86(1991) Practice for Estimating Toner Usage in Copiers Utilizing Dry Two Component Developers, **15.09**
F 996–92 Test Method for Separating a Total-Dose Induced MOSFET Threshold Voltage Shift into Components Due to Oxide-Trapped Holes and Interface States Using the Subthreshold, **10.04**
F 997–86(1993) Specification for Polycarbonate Resin for Medical Applications, **13.01**
F 998–86 Specification for Centrifugal Pump, Shipboard Use, **01.07**
F 999–86(1993)$^{\epsilon 1}$ Guide for Ecological Considerations for the Use of Chemical Dispersants in Oil Spill Response—Gravel or Cobble Beaches, **11.04**
F 1000–92 Practice for Piping System Drawing Symbols, **01.07**
F 1001–89 Guide for Liquid and Gaseous Chemicals to Evaluate Protective Clothing Materials, **11.03**
F 1002–86(1990) Performance Specification for Protective Clothing for Use by Workers Exposed to Specific Molten Substances and Related Thermal Hazards, **11.03**
F 1003–86(1992) Specification for Searchlights on Motor Lifeboats, **01.07**
F 1004–86 Consumer Safety Specification of First-Generation Standard Expansion Gates and Expandable Enclosures, **15.07**
F 1005–91 Practice for HVAC Duct Shapes; Identification and Description of Design Configuration, **01.07**
F 1006–86(1992) Specification for Entrainment Separators for Use in Marine Piping Applications, **01.07**
F 1007–86(1991) Specification for Pipe Line Expansion Joints of the Packed Slip Type for Marine Application, **01.07**
F 1008–86(1993)$^{\epsilon 1}$ Guide for Ecological Considerations for the Use of Chemical Dispersants in Oil Spill Response—Salt Marshes, **11.04**
F 1009–86(1993)$^{\epsilon 1}$ Guide for Ecological Considerations for the Use of Chemical Dispersants in Oil Spill Response—Offshore, **11.04**
F 1010–86(1993)$^{\epsilon 1}$ Guide for Ecological Considerations for the Use of Dispersants in Oil Spill Response—Bird Habitats, **11.04**
F 1011–86 Guide for Developing a Hazardous Materials Training Curriculum for Initial Response Personnel, **11.04**
F 1012–86(1993)$^{\epsilon 1}$ Guide for Ecological Consideration for the Use of Chemical Dispersants in Oil Spill Response—the Arctic, **11.04**
F 1013–92 Practice for Determining the Performance of a Liquid/Liquid Separator System Employing a Single-Pass, Constant-Rate, Non-Solids Test, **14.02**
F 1014–92 Specification for Flashlights in Vessels, **01.07**
F 1015–86(1991) Test Method for Relative Abrasiveness of Synthetic Turf Playing Surfaces, **15.07**
F 1016–93 Practice for Tire Treadwear Data Analysis, **09.02**
F 1017–86 Method for Testing Lateral Toe Release of Adult Alpine Ski Bindings Under Impact Loading, **15.07**
F 1018–87a Specification for Steel Emergency Gear Stowage Locker, **01.07**
F 1019–87a Specification for Steel Deck Gear Stowage Box, **01.07**
F 1020–86(1991) Specification for Line Blind Valves for Marine Applications, **01.07**
F 1021–91 Specification for Feeders, Detergent, Rinse Agent, and Sanitizing Agent for Commercial Dishwashing and Glasswashing Machines, **15.07**
F 1022–86(1991) Specification for Chemical Sanitizing Commercial Dishwashing Machines, Recirculated Wash, Fresh Water Rinse Type, **15.07**
F 1023–86(1991) Specification for Dispenser, Powdered Ice Tea, **15.07**
F 1024–86(1991) Specification for Dispenser, Rehydrated Mashed Potato, **15.07**
F 1025–86 Guide for Selection and Use of Full Encirclement-Type Band Clamps for Reinforcement or Repair of Punctures or Holes in Polyethylene Gas Pressure Pipe, **08.04**
F 1026–86(1992) Specification for General Workmanship and Performance Measurements of Hemostatic Forceps, **13.01**
F 1027–86(1991) Practice for Assessment of Tissue and Cell Compatibility of Orofacial Prosthetic Materials and Devices, **13.01**
F 1028–86(1991) Specification for Tri-Fin Nails, **13.01**
F 1029–86(1991) Guide for Selection of Physical Security Measures for a Facility, **15.07**
F 1030–86(1991) Practice for Selection of Valve Operators, **01.07**
F 1031–86(1990) Practice for Training the Emergency Medical Technician (Basic), **13.01**
F 1032–91 Guide for Measuring Time-Dependent Total-Dose Effects in Semiconductor Devices Exposed to Pulsed Ionizing Radiation, **10.04, 10.05**
F 1033–86(1991) Test Method for Comparing Lift-Off Correction Media, **15.09**
F 1034–86(1991) Guide for Classifying Industrial Robots, **14.01**
F 1035–91 Practice for Use of Rubber-Cord Pie Disk to Demonstrate the Discernment Capability of a Tire X-Ray Imaging System, **09.02**
F 1036 Not yet assigned
F 1037–87(1993)$^{\epsilon 1}$ Test Method for Visual Rating of Appearance of Resilient Floors After In-Service Exposure to Foot Traffic, **15.04**
F 1038–87(1992) Test Method for Motor Life Evaluation of a Household Canister Vacuum Cleaner, **15.07**
F 1039–87(1993)$^{\epsilon 1}$ Test Method for the Measurement of Low-Level X-Radiation Used in X-Ray Security Screening Systems, **15.07**
F 1040–87(1993) Specification for Filter Units, Air Conditioning: Viscous-Impingement and Dry Types, Replaceable, **14.02**
F 1041–92 Guide for Squeeze-off Polyolefin Gas Pressure Pipe and Fittings, **08.04**
F 1042–87(1993) Practice for Estimating Toner and Dispersant Usage in Copiers Utilizing Liquid Developers, **15.09**
F 1043 Not yet assigned
F 1044–87 Test Method for Shear Testing of Porous Metal Coatings, **13.01**
F 1045–90a Performance Specification for Ice Hockey Helmets, **15.07**
F 1046–93 Guide for Preparing Artificially Worn Passenger and Light Truck Tires for Testing, **09.02**
F 1047–91 Specification for Frying and Braising Pans, Tilting Type, **15.07**
F 1048–87(1992) Test Method for Measuring the Effective Surface Roughness of Optical Components by Total Integrated Scattering, **06.01**
F 1049–90 Test Method for Shallow Etch Pit Detection on Silicon Wafers, **10.05**

F 1247–89 Specification for Intrusion Resistant Generic Vault Structures, **15.07**
F 1248–89 Test Method for Determination of Environmental Stress Crack Resistance (ESCR) of Polyethylene Pipe, **08.04**
F 1249–90 Test Method for Water Vapor Transmission Rate Through Plastic Film and Sheeting Using a Modulated Infrared Sensor, **15.09**
F 1250–89 Specification for Consumer Safety for Stationary Exercise Bicycles, **15.07**
F 1251–89 Terminology Relating to Polymeric Biomaterials in Medical and Surgical Devices, **13.01**
F 1252–89 Test Method for Measuring Optical Reflectivity of Transparent Materials, **15.03**
F 1253–90 Guide for Training the Emergency Medical Technician (Basic) to Perform Patient Secondary Assessment, **13.01**
F 1254–90 Practice for Performance of Prehospital Manual Defillibration, **13.01**
F 1255–90 Practice for Performance of Prehospital Automated Defillibration, **13.01**
F 1256–90 Guide for Selection and Practice of the Emergency Medical Services Instructor for Basic Life Support/Emergency Medical Technician (BLS/EMT) Training Programs, **13.01**
F 1257–90 Guide for Selection and Practice of the Emergency Medical Services Instructor for Advanced Life Support/Emergency Medical Technician (ALS/EMT) Training Programs, **13.01**
F 1258–90 Practice for Emergency Medical Dispatch, **13.01**
F 1259–89 Guide for Design of Flat, Straight-Line Test Structures for Detecting Metallization Open-Circuit or Resistance-Increase Failure Due to Electromigration, **10.04**
F 1260–89 Test Method for Estimating Electromigration Median Time-to-Failure and Sigma of Integrated Circuit Metallizations, **10.04**
F 1261–89 Test Method for Determining the Average Width and Cross-Sectional Area of a Straight, Thin-Film Metal Line, **10.04**
F 1262–89 Guide for Transient Radiation Upset Threshold Testing of Digital Integrated Circuits, **10.04**
F 1263–89 Test Method for Analysis of Overtest Data in Radiation Testing of Electronic Parts, **10.04**
F 1264–89 Guide for Mechanical Performance Considerations for Intramedullary Fixation Devices, **13.01**
F 1265–90 Test Method for Resistance to Impact of Resilient Floor Tile, **15.04**
F 1266–89 Performance Specification for Cerebral Stereotactic Instruments, **13.01**
F 1267–91 Specification for Metal, Expanded, Steel, **01.07**
F 1268–90 Guide for Establishing and Operating a Public Information, Education, and Relations Program for Emergency Medical Systems, **13.01**
F 1269–89 Practice for Destructive Shear Testing of Ball Bonds, **10.04**
F 1270–89 Practice for Preparing and Locating Emergency Station Bills, **01.07**
F 1271–90 Specification for Spill Valves for Use in Marine Tank Liquid Overpressure Protection Applications, **01.07**
F 1272 Not yet assigned
F 1273–91 Specification for Tank Vent Flame Arresters, **01.07**
F 1274–91 Specification for Fixed Wing Advanced Life Support Transport Units, **13.01**
F 1275–90 Test Method for the Performance of Griddles, **15.07**
F 1276–92 Test Method for Creep Relaxation of Laminated Composite Gasket Materials, **09.02**
F 1277–90 Test Method for Determination of Leachable Chloride in Packing and Gasketing Materials by Ion-Selective Electrode Technique, **09.02**
F 1278–90 Guide for Use and Handling of Flexible Retort Food Pouches in the Manufacturing Environment, **15.07**
F 1279–90 Specification for Ecological Considerations for the Use of Oilspill Dispersants in Freshwater and Other Inland Environments—Permeable Surfaces, **11.04**
F 1280–90 Specification for Ecological Considerations for the Use of Oilspill Dispersants in Freshwater and Other Inland Environments—Impermeable Surfaces, **11.04**
F 1281–92 Specification for Crosslinked Polyethylene/Aluminum/Crosslinked Polyethylene (PEX-AL-PEX) Pressure Pipe, **08.04**
F 1282–92 Specification for Polyethylene/Aluminum/Polyethylene (PE-Al-PE) Composite Pressure Pipe, **08.04**
F 1283–91 Specification for Fixed Wing Specialized Medical Transport Units, **13.01**
F 1284–92 Test Method for Evaluating Carpet Embedded Dirt Removal Effectiveness of Residential Central Vacuum Cleaning Systems, **15.07**
F 1285–90 Guide for Training the Emergency Medical Technician (Basic) to Perform Patient Examination Techniques, **13.01**
F 1286–90 Guide for Development and Operation of Level I Pediatric Trauma Facilities, **13.01**
F 1287–90 Guide for Scope of Performance of First Responders Who Provide Emergency Medical Care, **13.01**
F 1288–90 Guide for Planning for and Response to a Multiple Casualty Incident, **13.01**
F 1289–92 Practice for Development of Literature Pertaining to the Selection of Residential Resilient Vinyl Floor Coverings, **15.04**
F 1290–90 Practice for Electrofusion Joining Polyolefin Pipe and Fittings, **08.04**
F 1291–90 Test Method for Measuring the Thermal Insulation of Clothing Using a Heated Manikin, **11.03**
F 1292–93 Specification for Measurement of Impact Attenuation of Surface Systems Under and Around Playground Equipment, **15.07**
F 1293–91a Test Method for Evaluation of Coated Transparent Plastics Subjected to Cyclic Flexural/Thermal Fatigue, **15.03**
F 1294 Not yet assigned
F 1295 Not yet assigned
F 1296–91 Guide for Evaluating Chemical Protective Clothing, **11.03**
F 1297–90 Guide for Location and Instruction Symbols for Evacuation and Lifesaving Equipment, **01.07**
F 1298–90 Specification for Ball Joints of Flexible/Expansion Type for Marine Applications, **01.07**
F 1299–90 Specification for Food Service Equipment Hoods for Cooking Appliances, **15.07**
F 1300 Not yet assigned
F 1301–90 Practice for Labeling Chemical Protective Clothing, **11.03**
F 1302 Discontinued 1991: Practice for Abbreviated Marking of Plastic Consumer Products
F 1303–90 Specification for Sheet Vinyl Floor Covering with Backing, **15.04**
F 1304–90 Test Method for Deflection of Resilient Floor Tile, **15.04**
F 1305–90 Guide for Classification of Amusement Ride and Device-Related Injuries and Illnesses, **15.07**
F 1306–90 Test Method for Slow Rate Penetration Resistance of Flexible Barrier Films and Laminates, **15.09**
F 1307–90 Test Method for Oxygen Transmission Rate Through Dry Packages Using a Coulometer Sensor, **15.09**
F 1308–90 Test Method for Analytical Procedure for Quantitating Volatile Extractables in Microwave Susceptors Used for Food Products, **15.09**
F 1309–90 Practice for Installation Procedures for Fitting Chocks to Marine Machinery Foundations, **01.07**
F 1310–90 Specification for 65-Gallon Dispensing Tank, **01.07**
F 1311–90 Specification for Large-Diameter Fabricated Carbon Steel Flanges, **01.07**
F 1312–90 Specification for Brick, Insulating, High-Temperature, Fireclay, **01.07**
F 1313–90 Specification for Volatile *n*-Nitrosamine Levels in Rubber Nipples on Pacifiers, **15.07**
F 1314–90 Specification for Wrought Nitrogen-Strengthened, High-Manganese, High-Chromium Stainless Steel Bar and Wire for Surgical Implants, **13.01**
F 1315–90 Test Method for Density of a Sheet Gasket Material, **09.02**
F 1316–90 Test Method for Determining the Transmissivity of Transparent Parts, **15.03**
F 1317–90 Test Method for Calibration of Microwave Ovens, **15.09**
F 1318–90 Test Method for Determination of Productivity Using Electrostatic Copy Machines with Various Configurations, **15.09**
F 1319–90 Test Method for Determination of Abrasion and Smudge Resistance of Images Produced from Business Copy Products (Crockmeter Method), **15.09**
F 1320–92 Test Method for the Evaluation of Thermal Paper Employing a Facsimile Thermal Printer as a Test Instrument, **15.09**
F 1321–92 Guide for Conducting a Stability Test (Lightweight Survey and Inclining Experiment) to Determine the Light Ship Displacement and Centers of Gravity of a Vessel, **01.07**
F 1322–90 Guide for Selection of Shipboard Incinerators, **01.07**
F 1323–90 Specification for Shipboard Incinerators, **01.07**
F 1324 Not yet assigned
F 1325–91 Specification for Suture Needle Holders—General Workmanship Requirements and Corresponding Test Methods, **13.01**
F 1326–91 Test Method for Measuring Maximum Dry Volume of Utility Vacuum Cleaners, **15.07**
F 1327–91 Terminology Relating to Barrier Materials for Medical Packaging, **15.09**
F 1328–90 Guide for Training the Emergency Medical Technician (Basic) to Prepare Patients for Medical Transportation, **13.01**
F 1329–91 Guide for Training the Emergency Medical Technician (Basic) in Basic Anatomy and Physiology, **13.01**
F 1330–91 Guide for Metallic Abrasive Blasting to Descale the Interior of Pipe, **01.07**
F 1331–91 Practice for Installation Procedures of Vinyl Deck Covering on Portable Plates in Electrical and Electronic Spaces, **01.07**
F 1332–91 Practice for Use of SI (Metric Units) in Maritime Applications (Committee F-25 Supplement to E 380), **01.07**
F 1333–91 Specification for Construction of Fire and Foam Station Cabinets, **01.07**
F 1334–91 Test Method for Determining Sound Power Level of Vacuum Cleaners, **15.07**
F 1335–91 Specification for Pressure-Rated Composite Pipe and Fittings for Hot and Cold Service, **08.04**
F 1336–91 Specification for Poly(Vinyl Chloride) (PVC) Gasketed Sewer Fittings, **08.04**
F 1337–91 Practice for Human Engineering Program Requirements for Ships and Marine Systems, Equipment and Facilities, **01.07**
F 1338–91 Guide for Main Propulsion Medium Speed Marine Diesel Engines Covering Performance and Minimum Scope of Assembly, **01.07**
F 1339–92 Guide for Organization and Operation of Emergency Medical Services Systems, **13.01**
F 1340–92 Test Method for Determining the Mean Interface Trap Density of MOSFETs by Charge-Pumping, **10.04**
F 1341–92 Specification for Unalloyed Titanium Wire for Surgical Implant Applications, **13.01**

Counterfeiting, Alteration, Diversion, Duplication, Simulation, Substitution (CADDS) of Products or Documents, **15.07**

F 1449–92 Guide for Care and Maintenance of Flame Resistance and Thermal Protective Clothing, **11.03**

F 1450–92 Test Method for Hollow Metal Swinging Door Assemblies for Detention Facilities, **04.07**

F 1451–92 Test Method for Measuring Sori on Silicon Wafers by Automated Noncontact Scanning, **10.05**

F 1452–92 Specification for Minimum Performance and Safety Requirements for Components and Systems of Anesthetic Gas Monitors, **13.01**

F 1453–92 Guide for the Training and Evaluation of First Responders Who Provide Emergency Medical Care, **13.01**

F 1455–92 Guide for Selection of Structural Details for Ship Construction, **01.07**

F 1456–92 Specification for Capnometers, **13.01**

F 1457–93 Terminology Relating To Laser Printers, **15.09**

F 1459–93 Test Method for Determination of the Susceptibility of Metallic Materials To Hydrogen Gaseous Embrittlement, **15.03**

F 1461–93 Practice for a Chemical Protective Clothing Program, **11.03**

F 1462–93 Specification for Oxygen Analyzers, **13.01**

F 1463–93 Specification for Alarm Signals in Medical Equipment Used in Anesthesia and Respiratory Care, **13.01**

F 1464–93 Specification for Oxygen Concentrators for Domiciliary Use, **13.01**

F 1465–93 Guide for Selection of Security Control Systems Part III—Defining the Operator System Interface, **04.07**

F 1466–93 Specification for Iron-Nickel-Cobalt Alloys for Metal-To-Ceramic Sealing Applications, **10.04**

F 1467–93 Guide for the Use of an X-Ray Tester (=10kev Photons) in Ionizing Radiation Effects Testing of Microelectronic Devices, **10.04**

F 1468–93 Practice for the Evaluation of Metallic Weapons Detectors for Controlled Access Search and Screening, **15.07**

F 1471–93 Test Method for Evaluating the Air Cleaning Performance of a High Efficiency Particulate Air Filter System, **14.02**

F 1472–93 Specification for Wrought Ti-6Al-4V Alloy for Surgical Implant Applications, **13.01**

F 1474–93 Test Method for Slow Crack Growth Resistance of Notched Polyethylene Plastic Pipe, **08.04**

EXHIBIT 22

1994 Annual Book of ASTM Standards

Index

Alphanumeric List

ASTM Standards

Standards:

Specifications	2605
Test Methods	6593
Terminology	193
Total	9391

Each ASTM Standard has a unique serial designation. It is comprised of a capital letter indicating general classification (A, ferrous metals; B, nonferrous metals; C, cementitious, ceramic, concrete, and masonry materials; D, miscellaneous materials; E, miscellaneous subjects; F, materials for specific applications; G, corrosion, deterioration, and degradation of materials; ES, emergency standards; P, proposals), a serial number (one to four digits), a dash, and the year of issue.

In each serial designation, the number following the dash indicates the year of original adoption as standard or, in the case of revision, the year of last revision. Thus, standards adopted or revised during the year 1994 have as their final number, 94. A letter following this number indicates more than one revision during that year, that is 94a indicates the second revision in 1994, 94b the third revision, etc. Standards that have been reapproved without change are indicated by the year of last reapproval in parentheses as part of the designation number, for example, (1994). A superscript epsilon indicates an editorial change since the last revision or reapproval; $\epsilon 1$ for the first change, $\epsilon 2$ for the second, etc.

If a standard is written in acceptable metric units and has a companion standard written in inch-pound units (or other units), the metric standard is identified by a letter M after the serial number; this standard contains "hard metric" units.

If a standard is written in inch-pound units (or other units) and acceptable metric units, the document is identified by a dual alphanumeric designation.

When reference is made to a standard, the *complete* designation should be given. Best practice is to state the *designation and title.*

The boldface number(s) following the title refer to the volume(s) of the *Annual Book of ASTM Standards* in which the standard appears.

This list includes only those standards which appear in the 1994 edition of each volume of the *Annual Book of ASTM Standards*. New and revised standards that were approved after the closing date for the volume are available as separate reprints and will be listed in next year's edition.

Each ASTM standard is available as a separate reprint from ASTM. Price and order information are available from ASTM Customer Service, 1916 Race Street, Philadelphia, PA 19103, 215-299-5585.

B. NONFERROUS METALS

B 1–90 Specification for Hard-Drawn Copper Wire, **02.03**
B 2–88$^{\epsilon 1}$ Specification for Medium-Hard-Drawn Copper Wire, **02.03**
B 3–90 Specification for Soft or Annealed Copper Wire, **02.03**
B 4 Discontinued
B 5–89 Specification for Electrolytic Tough-Pitch Copper Refinery Shapes, **02.01**
B 6–87 (1992)$^{\epsilon 1}$ Specification for Zinc (Slab Zinc), **02.04**
B 7 Discontinued—Replaced by B 30
B 8–93 Specification for Concentric-Lay-Stranded Copper Conductors, Hard, Medium-Hard, or Soft, **02.03**
B 9–90 Specification for Bronze Trolley Wire, **02.03**
B 10 Discontinued
B 11 Discontinued
B 12 Discontinued—Replaced by B 133
B 13 Discontinued
B 14 Discontinued
B 15 Discontinued—Replaced by B 124
B 16–92 Specification for Free-Cutting Brass Rod, Bar, and Shapes for Use in Screw Machines, **02.01**
B 16M–92 Specification for Free-Cutting Brass Rod, Bar, and Shapes for Use in Screw Machines [Metric], **02.01**
B 17 Discontinued—Replaced by B 66, B 67
B 18 Discontinued—Replaced by E 46, E 57
B 19–86(1993)$^{\epsilon 1}$ Specification for Cartridge Brass Sheet, Strip, Plate, Bar, and Disks (Blanks), **02.01**
B 20 Discontinued—Combined with B 19
B 21–90 Specification for Naval Brass Rod, Bar, and Shapes, **02.01**
B 21M–90a Specification for Naval Brass, Rod, Bar, and Shapes [Metric], **02.01**
B 22–93a Specification for Bronze Castings for Bridges and Turntables, **02.01**
B 23–83 Specification for White Metal Bearing Alloys (Known Commercially as Babbitt Metal), **02.04**
B 24 Discontinued
B 25 Discontinued—Replaced by B 209
B 26/B26M–92a Specification for Aluminum-Alloy Sand Castings, **02.02**
B 27 Discontinued—Replaced by E 54
B 28 Discontinued—Replaced by E 54
B 29–92 Specification for Pig Lead, **02.04**
B 30–93a Specification for Copper-Base Alloys in Ingot Form, **02.01**
B 31 Discontinued—Replaced by B 30
B 32–93 Specification for Solder Metal, **02.04**
B 33–91 Specification for Tinned Soft or Annealed Copper Wire for Electrical Purposes, **02.03**
B 34 Redesignated E 53
B 35 Discontinued—Replaced by E 37
B 36/B36M–91a$^{\epsilon 1}$ Specification for Brass Plate, Sheet, Strip, and Rolled Bar, **02.01**
B 37–92 Specification for Aluminum for Use in Iron and Steel Manufacture, **02.02**
B 38 Discontinued—Replaced by E 40
B 39–79(1993) Specification for Nickel, **02.04**
B 40 Discontinued—Replaced by E 34
B 41 Discontinued—Replaced by E 39
B 42–93 Specification for Seamless Copper Pipe, Standard Sizes, **02.01**
B 43–91 Specification for Seamless Red Brass Pipe, Standard Sizes, **02.01**
B 44 Discontinued—Replaced by B 111
B 45 Discontinued—Replaced by E 36, E 54
B 46 Discontinued—Replaced by E 54
B 47–64(1990) Specification for Copper Trolley Wire, **02.03**
B 48–92 Specification for Soft Rectangular and Square Bare Copper Wire for Electrical Conductors, **02.03**
B 49–90 Specification for Hot-Rolled Copper Redraw Rod for Electrical Purposes, **02.01**
B 50 Discontinued
B 51 Discontinued
B 52 Discontinued—Replaced by B 644
B 53 Discontinued—Replaced by B 644
B 54 Discontinued—Replaced by B 132, B 147
B 55 Discontinued
B 56 Discontinued—Replaced by B 111
B 57 Discontinued—Replaced by B 171
B 58 Discontinued—Replaced by B 179
B 59 Discontinued—Replaced by B 148
B 60 Discontinued—Replaced by B 143
B 61–93 Specification for Steam or Valve Bronze Castings, **02.01**
B 62–93 Specification for Composition Bronze or Ounce Metal Castings, **02.01**
B 63–90 Test Method for Resistivity of Metallically Conducting Resistance and Contact Materials, **03.04**
B 64 Discontinued—Replaced by B 260
B 65 Discontinued—Replaced by B 146
B 66–93a Specification for Bronze Castings in the Rough for Steam Locomotive Wearing Parts, **02.01**
B 67–93a Specification for Car and Tender Journal Bearings, Lined, **02.01, 02.04**
B 68–92a Specification for Seamless Copper Tube, Bright Annealed, **02.01**
B 68M–92a Specification for Seamless Copper Tube, Bright Annealed [Metric], **02.01**
B 69–92 Specification for Rolled Zinc, **02.04**
B 70–90 Specification for Change of Resistance with Temperature of Metallic Materials for Electrical Heating, **03.04**
B 71 Discontinued—Replaced by E 38
B 72 Discontinued
B 73 Discontinued—Replaced by B 260
B 74 Discontinued—Replaced by B 144
B 75–93 Specification for Seamless Copper Tube, **02.01**
B 75M–93 Specification for Seamless Copper Tube [Metric], **02.01**
B 76–90 Method for Accelerated Life Test of Nickel-Chromium and Nickel-Chromium-Iron Alloys for Electrical Heating, **03.04**
B 77–90 Test Method for Thermoelectric Power of Electrical-Resistance Alloys, **03.04**
B 78–90 Method for Accelerated Life Test of Iron-Chromium-Aluminum Alloys for Electrical Heating, **03.04**
B 79 Discontinued—Replaced by B 209
B 80–93 Specification for Magnesium-Alloy Sand Castings, **02.02**
B 81 Redesignated E 56
B 82 Discontinued—Replaced by B 344
B 83 Discontinued—Replaced by B 344
B 84–90 Test Method for Temperature-Resistance Constants of Alloy Wires for Precision Resistors, **03.04**
B 85–92a Specification for Aluminum-Alloy Die Castings, **02.02**
B 86–88 Specification for Zinc-Alloy Die Castings, **02.04**
B 87 Discontinued—Replaced by B 8
B 88–93a Specification for Seamless Copper Water Tube, **02.01**
B 88M–93a Specification for Seamless Copper Water Tube [Metric], **02.01**
B 89 Discontinued—Replaced by B 211
B 90M Discontinued 1993 Replaced by B 90/B90M: Specification for Magnesium-Alloy Sheet and Plate (Metric)
B 90/B90M–93 Specification for Magnesium-Alloy Sheet and Plate, **02.02**
B 91–92 Specification for Magnesium-Alloy Forgings, **02.02**
B 92M Discontinued 1990—Replaced by B 92/B 92M: Specification for Magnesium Ingot and Stick for Remelting [Metric]
B 92/B92M–89 Specification for Magnesium Ingot and Stick for Remelting, **02.02**
B 93M Discontinued—1990—Replaced by B 93/B93M: Specification for Magnesium Alloys in Ingot Form for Sand Castings, Permanent Mold Castings, and Die Castings
B 93/B93M–94a Specification for Magnesium Alloys in Ingot Form for Sand Castings, Permanent Mold Castings, and Die Castings, **02.02**
B 94–94 Specification for Magnesium-Alloy Die Castings, **02.02**
B 95 Discontinued—Replaced by E 228
B 96–93 Specification for Copper-Silicon Alloy Plate Sheet, Strip, and Rolled Bar for General Purposes and Pressure Vessels, **02.01**
B 96M–93a Specification for Copper-Silicon Alloy Plate, Sheet, Strip, and Rolled Bar for General Purposes [Metric], **02.01**
B 97 Discontinued (To be combined with B 96)
B 98–93 Specification for Copper-Silicon Alloy Rod, Bar, and Shapes, **02.01**
B 98M–93 Specification for Copper-Silicon Alloy Rod, Bar, and Shapes [Metric], **02.01**
B 99–93 Specification for Copper-Silicon Alloy Wire for General Purposes, **02.01**
B 99M–86a(1992) Specification for Copper-Silicon Alloy Wire for General Purposes [Metric], **02.01**
B 100–93 Specification for Rolled Copper-Alloys for Bridge Expansion Bearing Plates and Sheets and for Other Structural Applications, **02.01**
B 101–92 Specification for Lead-Coated Copper Sheet and Strip for Building Construction, **02.01**
B 102–93 Specification for Lead and Tin Alloy Die Castings, **02.04**
B 103/B103M–93 Specification for Phosphor Bronze Plate, Sheet, Strip, and Rolled Bar, **02.01**
B 104 Discontinued—Replaced by B 111
B 105–88 Specification for Hard-Drawn Copper Alloy Wires for Electrical Conductors, **02.01, 02.03**
B 106–90 Test Method for Flexivity of Thermostat Metals, **03.04**
B 107M Discontinued 1992—Replaced by B 107/B 107M: Specification for Magnesium-Alloy Extended Bars, Rods, Shapes, Tubes and Wire [Metric]
B 107/B107M–92 Specification for Magnesium-Alloy Extruded Bars, Rods, Shapes, Tubes, and Wire, **02.02**
B 108–92a Specification for Aluminum-Alloy Permanent Mold Castings, **02.02**
B 109 Discontinued—Replaced by B 209
B 110 Discontinued
B 111–93 Specification for Copper and Copper-Alloy Seamless Condenser Tubes and Ferrule Stock, **02.01**
B 111M–93 Specification for Copper and Copper-Alloy Seamless Condenser Tubes and Ferrule Stock [Metric], **02.01**
B 112 Discontinued—Replaced by B 179
B 113 Redesignated F 113
B 114–90 Test Method for Temperature-Resistance Constants of Sheet Materials for Shunts and Precision Resistors, **03.04**
B 115–93 Specification for Electrolytic Cathode Copper, **02.01**
B 116–64(1990)$^{\epsilon 1}$ Specification for Figure-9 Deep-Section Grooved and Figure-8 Copper Trolley Wire for Industrial Haulage, **02.03**
B 117–94 Test Method of Salt Spray (Fog) Testing, **03.02**
B 118 Discontinued

B 222 Discontinued 1990—Replaced by B 783: Specification for Sintered Iron-Copper Structural Parts
B 223-85(1991) Test Method for Modulus of Elasticity of Thermostat Metals (Cantilevel Beam Method), **03.04**
B 224-92 Classification of Coppers, **02.01**
B 225 Discontinued
B 226-90 Specification for Cored, Annular, Concentric-Lay-Stranded Copper Conductors, **02.03**
B 227-88(1993)$^{\epsilon 1}$ Specification for Hard-Drawn Copper-Clad Steel Wire, **02.03**
B 228-93 Specification for Concentric-Lay-Stranded Copper-Clad Steel Conductors, **02.03**
B 229-90 Specification for Concentric-Lay-Stranded Copper and Copper-Clad Steel Composite Conductors, **02.03**
B 230-89 Specification for Aluminum 1350-H19 Wire, for Electrical Purposes, **02.03**
B 230M-89 Specification for Aluminum 1350-H19 Wire, for Electrical Purposes [Metric], **02.03**
B 231-90 Specification for Concentric-Lay-Stranded Aluminum 1350 Conductors, **02.03**
B 231M-88$^{\epsilon 1}$ Specification for Concentric-Lay Stranded Aluminum 1350 Conductors [Metric], **02.03**
B 232-92 Specification for Concentric-Lay-Stranded Aluminum Conductors, Coated Steel-Reinforced (ACSR), **02.03**
B 232M-92 Specification for Concentric-Lay-Stranded Aluminum Conductors, Coated Steel-Reinforced (ACSR) [Metric], **02.03**
B 233-92 Specification for Aluminum 1350 Drawing Stock for Electrical Purposes, **02.03**
B 234-92a Specification for Aluminum and Aluminum-Alloy Drawn Seamless Tubes for Condensers and Heat Exchangers, **02.02**
B 234M-92a Specification for Aluminum and Aluminum-Alloy Drawn Seamless Tubes for Condensers and Heat-Exchangers [Metric], **02.02**
B 235 Discontinued—Combined with B 221
B 236-92a Specification for Aluminum Bars for Electrical Purposes (Bus Bars), **02.02**
B 236M-92a Specification for Aluminum Bars for Electrical Purposes (Bus Bars) [Metric], **02.02**
B 237 Discontinued
B 238 Redesignated F 238
B 239 Redesignated F 239
B 240-88 Specification for Zinc Alloys in Ingot Form for Die Castings, **02.04**
B 241M Discontinued—Replaced by B 241/B 241M
B 241/B241M-93 Specification for Aluminum and Aluminum-Alloy Seamless Pipe and Seamless Extruded Tube, **02.02**
B 242-62(1990) Practice for Preparation of High-Carbon Steel for Electroplating, **02.05**
B 243-94 Terminology of Powder Metallurgy, **02.05**
B 244-79(1993) Test Method for Measurement of Thickness of Anodic Coatings on Aluminum and of Other Nonconductive Coatings on Nonmagnetic Basis Metals with Eddy-Current Instruments, **02.05**
B 245 Discontinued—Replaced by B 498
B 246-88 Specification for Tinned Hard-Drawn and Medium-Hard-Drawn Copper Wire for Electrical Purposes, **02.03**
B 247-93 Specification for Aluminum and Aluminum-Alloy Die Forgings, Hand Forgings, and Rolled Ring Forgings, **02.02**
B 247M-93 Specification for Aluminum and Aluminum-Alloy Die Forgings, Hand Forgings, and Rolled Ring Forgings [Metric], **02.02**
B 248-93 Specification for General Requirements for Wrought Copper and Copper-Alloy Plate, Sheet, Strip, and Rolled Bar, **02.01**
B 248M-92 Specification for General Requirements for Wrought Copper and Copper-Alloy Plate, Sheet, Strip, and Rolled Bar [Metric], **02.01**
B 249-91 Specification for General Requirements for Wrought Copper and Copper-Alloy Rod, Bar, and Shapes, **02.01**
B 249M-84$^{\epsilon 1}$ Specification for General Requirements for Wrought Copper and Copper-Alloy Rod, Bar, and Shapes [Metric], **02.01**
B 250-92 Specification for General Requirements for Wrought Copper-Alloy Wire, **02.01**
B 250M-92 Specification for General Requirements for Wrought Copper-Alloy Wire [Metric], **02.01**
B 251-93 Specification for General Requirements for Wrought Seamless Copper and Copper-Alloy Tube, **02.01**
B 251M-93 Specification for General Requirements for Wrought Seamless Copper and Copper-Alloy Tube [Metric], **02.01**
B 252-92 Practice for Preparation of Zinc Alloy Die Castings for Electroplating and Conversion Coatings, **02.05**
B 253-87(1993) Guide for Preparation of Aluminum Alloys for Electroplating, **02.05**
B 254-92 Practice for Preparation of and Electroplating on Stainless Steel, **02.05**
B 255-83a(1990) Specification for Sintered Bronze Structural Parts, **02.05**
B 256 Redesignated F 256
B 257 Redesignated F 257
B 258-81(1991) Specification for Standard Nominal Diameters and Cross-Sectional Areas of AWG Sizes of Solid Round Wires Used as Electrical Conductors, **02.03**
B 259 Discontinued
B 260 Discontinued
B 261 Discontinued—Replaced by B 498
B 262 Discontinued—Replaced by B 609
B 263-89 Method for Determination of Cross-Sectional Area of Stranded Conductors, **02.03**
B 264 Discontinued
B 265-94 Specification for Titanium and Titanium Alloy Strip, Sheet, and Plate, **02.04**
B 266 Discontinued
B 267-90$^{\epsilon 1}$ Specification for Wire for Use in Wire-Wound Resistors, **03.04**
B 268 Redesignated F 268
B 269 Redesignated F 269
B 270 Redesignated F 270
B 271-93a Specification for Copper-Base Alloy Centrifugal Castings, **02.01**
B 272-93 Specification for Flat Copper Products with Finished (Rolled or Drawn) Edges (Flat Wire and Strip), **02.01**
B 273 Discontinued—Replaced by B 211, B 221, B 308
B 274 Discontinued—Replaced by B 210, B 235, B 241
B 275-94 Practice for Codification of Certain Nonferrous Metals and Alloys, Cast and Wrought, **02.02**
B 276-91 Test Method for Apparent Porosity in Cemented Carbides, **02.05**
B 277-89 Test Method for Hardness of Electrical Contact Materials, **03.04**
B 278 Redesignated F 278
B 279-93 Test Method for Stiffness of Bare Soft Square and Rectangular Copper and Aluminum Wire for Magnet Wire Fabrication, **02.03**
B 280-93a Specification for Seamless Copper Tube for Air Conditioning and Refrigeration Field Service, **02.01**
B 281-88 Practice for Preparation of Copper and Copper-Base Alloys for Electroplating and Conversion Coatings, **02.05**
B 282-83a(1990) Specification for Sintered Brass Structural Parts, **02.05**
B 283-91 Specification for Copper and Copper-Alloy Die Forgings (Hot-Pressed), **02.01**
B 284 Discontinued 1991: Specification for Rosin Flux-Core Solder
B 285 Discontinued
B 286-89 Specification for Copper Conductors for Use in Hookup Wire for Electronic Equipment, **02.03**
B 287 Discontinued
B 288 Redesignated F 288
B 289 Redesignated F 289
B 290 Redesignated F 290
B 291 Discontinued 1992: Specification for Copper-Zinc-Manganese Alloy (Manganese Brass) Sheet and Strip
B 292 Discontinued—Replaced by B 584
B 293 Discontinued
B 294-92 Method for Hardness Testing of Cemented Carbides, **02.05**
B 295 Discontinued
B 296-67(1990) Practice for Temper Designations of Magnesium Alloys, Cast and Wrought, **02.02**
B 297 Discontinued
B 298-93 Specification for Silver-Coated Soft or Annealed Copper Wire, **02.03**
B 299-92 Specification for Titanium Sponge, **02.04**
B 300 Redesignated F 300
B 301-93 Specification for Free-Cutting Copper Rod and Bar, **02.01**
B 301M-93 Specification for Free-Cutting Copper Rod and Bar [Metric], **02.01**
B 302-92 Specification for Threadless Copper Pipe, **02.01**
B 303 Discontinued 1990 (Replaced by B 783): Specification for Copper-Infiltrated Sintered Carbon Steel Structural Parts
B 304 Discontinued
B 305 Discontinued
B 306-92 Specification for Copper Drainage Tube (DWV), **02.01**
B 307 Discontinued—Replaced by B 210
B 308M Discontinued 1991—Replaced by B 308/B 308M: Specification for Aluminum-Alloy 6061-T6 Standard Structural Shapes, Rolled or Extruded [Metric]
B 308/B308M-93 Specification for Aluminum-Alloy 6061-T6 Standard Structural Shapes, Rolled or Extruded, **02.02**
B 309 Discontinued—Combined with B 310
B 310 Discontinued 1990 (Replaced by B 783): Specification for Sintered Carbon Steel Structural Parts
B 311-93 Test Method for Density Determination for Powder Metallurgy (P/M) Materials Containing Less than Two Percent Porosity, **02.05**
B 312-82(1988)$^{\epsilon 1}$ Test Method for Green Strength for Compacted Metal Powder Specimens, **02.05**
B 313M Discontinued 1991—Replaced by B 313/B313M: Specification for Aluminum and Aluminum-Alloy Round Welded Tubes [Metric]
B 313/B313M-92a Specification for Aluminum and Aluminum-Alloy Round Welded Tubes, **02.02**
B 314-90 Specification for Aluminum 1350 Wire for Communication Cable, **02.03**
B 315-93 Specification for Seamless Copper Alloy Pipe and Tube, **02.01**
B 316M Discontinued 1993—Replaced by B 316/B 316M: Specification for Aluminum and Aluminum-Alloy Rivet and Cold Heading Wire and Rods
B 316/B316M-93 Specification for Aluminum-Alloy Rivet and Cold Heading Wire and Rods, **02.02**
B 317-92a Specification for Aluminum-Alloy Extruded Bar, Rod, Pipe, and Structural Shapes for Electrical Purposes (Bus Conductors), **02.02**
B 318 Discontinued—Combined with B 307
B 319-91 Guide for Preparation of Lead and Lead Alloys for Electroplating, **02.05**
B 320-60(1990) Practice for Preparation of Iron Castings for Electroplating, **02.05**

D 1179–93 Test Methods for Fluoride Ion in Water, **11.01**
D 1180 Discontinued 1989: Test Method for Bursting Strength of Round Rigid Plastic Tubing
D 1181 Discontinued
D 1182 Discontinued
D 1183–92 Test Methods for Resistance of Adhesive to Cyclic Laboratory Aging Conditions, **15.06**
D 1184–93 Test Methods for Flexural Strength of Adhesive Bonded Laminated Assemblies, **15.06**
D 1185–85(1989) Test Method for Pallets and Related Structures Employed in Materials Handling and Shipping, **15.09**
D 1186–93 Method for Nondestructive Measurement of Dry Film Thickness of Nonmagnetic Coatings Applied to a Ferrous Base, **06.01**
D 1187–82 Test Method for Asphait-Base Emulsions for Use as Protective Coatings for Metal, **04.04**
D 1188–89 Test Method for Bulk Specific Gravity and Density of Compacted Bituminous Mixtures Using Paraffin-Coated Specimens, **04.03**
D 1189 Discontinued
D 1190–74(1980)$^{\epsilon 1}$ Specification for Concrete Joint Sealer, Hot-Poured Elastic Type, **04.03**
D 1191–84 Method of Testing Concrete Joint Sealers, **04.03**
D 1192–70(1977)$^{\epsilon 1}$ Specification for Equipment for Sampling Water and Steam, **11.01**
D 1193–91 Specification for Reagent Water, **11.01**
D 1194–72(1987)$^{\epsilon 1}$ Test Method for Bearing Capacity of Soil for Static Load on Spread Footings, **04.08**
D 1195–93 Methods for Repetitive Static Plate Load Tests of Soils and Flexible Pavement Components, for Use in Evaluation and Design of Airport and Highway Pavements, **04.08**
D 1196–93 Methods for Nonrepetitive Static Plate Load Tests of Soils and Flexible Pavement Components, for Use in Evaluation and Design of Airport and Highway Pavements, **04.08**
D 1197 Redesignated E 197
D 1198–93 Test Method for Solvent Tolerance of Amine Resins, **06.03**
D 1199–86(1991)$^{\epsilon 1}$ Specification for Calcium Carbonate Pigments, **06.03**
D 1200–88 Test Method for Viscosity of Paints, Varnishes, and Lacquers by Ford Viscosity Cup, **06.01**
D 1201–81(1992) Specification for Thermosetting Polyester Molding Compounds, **08.01**
D 1202 Discontinued 1991: Specification for Plasticized Cellulose Acetate Sheet and Film for Primary Insulation
D 1203–89 Test Methods for Voiatile Loss from Plastics Using Activated Carbon Methods, **08.01**
D 1204–84 Test Method for Linear Dimensional Changes of Nonrigid Thermoplastic Sheeting or Film at Elevated Temperature, **08.01**
D 1205 Discontinued
D 1206 Discontinued
D 1207 Discontinued
D 1208–84(1989)$^{\epsilon 1}$ Test Methods for Common Properties of Certain Pigments, **06.03**
D 1209–93 Test Method for Color of Clear Liquids (Platinum-Cobalt Scale), **06.04**
D 1210–79(1983)$^{\epsilon 1}$ Test Method for Fineness of Dispersion of Pigment-Vehicle Systems, **06.01**
D 1211–87(1993)$^{\epsilon 1}$ Test Method for Temperature-Change Resistance of Clear Nitrocellulose Lacquer Films Applied to Wood, **06.02**
D 1212–91 Test Methods for Measurement of Wet Film Thickness of Organic Coatings, **06.01**
D 1213 Discontinued
D 1214–89 Test Method for Sieve Analysis of Glass Spheres, **06.02**
D 1215 Discontinued
D 1216 Discontinued
D 1217–93 Test Method for Density and Relative Density (Specific Gravity) of Liquids by Bingham Pycnometer, **05.01**
D 1218–92 Test Method for Refractive Index and Refractive Dispersion of Hydrocarbon Liquids, **05.01, 10.03**
D 1219 Discontinued—Replaced by D 3227
D 1220–65(1990) Practice for Measurement and Calibration of Upright Cylindrical Tanks (Available as Separate Reprint Only), **05.01**
D 1221 Discontinued
D 1222 Discontinued
D 1223–93 Test Method for Specular Gloss of Paper and Paperboard at 75°, **15.09**
D 1224–92 Test Method for Zinc and Cadmium in Paper, **15.09**
D 1225 Discontinued
D 1226 Discontinued
D 1227–87 Specification for Emulsified Asphalt Used as a Protective Coating for Built-Up Roofing, **04.04**
D 1228 Discontinued
D 1229–87(1992) Test Method for Rubber Property—Compression Set at Low Temperatures, **09.01**
D 1230–94 Test Method for Flammability of Clothing Textiles, **07.01**
D 1231 Discontinued—Replaced by D 1905
D 1232 Discontinued—Replaced by D 1905
D 1233–88(1993) Specification for Twine Made for Bast and Leaf Fibers, **07.01**
D 1234–85(1990)$^{\epsilon 1}$ Method for Sampling and Testing Staple Length of Grease Wool, **07.01**
D 1235 Discontinued—Replaced by D 2497
D 1236 Discontinued—Replaced by D 2497
D 1237 Discontinued—Replaced by D 2497
D 1238–90b Test Method for Flow Rates of Thermoplastics by Extrusion Plastometer, **08.01**
D 1239–92 Test Method for Resistance of Plastic Films to Extraction by Chemicals, **08.01**
D 1240–93 Test Method for Rosin Acids Content of Naval Stores, Including Rosin, Tall Oil And Related Products, **06.03**
D 1241–68(1994) Specification for Materials for Soil-Aggregate Subbase, Base, and Surface Courses, **04.08**
D 1242–93 Test Methods for Resistance of Plastic Materials to Abrasion, **08.01**
D 1243–79(1990)$^{\epsilon 1}$ Test Method for Dilute Solution Viscosity of Vinyl Chloride Polymers, **08.01**
D 1244–81(1991)$^{\epsilon 1}$ Practice for Designation of Yarn Construction, **07.01**
D 1245–84(1989) Practice for Examination of Water-Formed Deposits by Chemical Microscopy, **11.02**
D 1246–88 Test Method for Iodide and Bromide in Water, **11.01**
D 1247 Discontinued
D 1248–84(1989)$^{\epsilon 1}$ Specification for Polyethylene Plastics Molding and Extrusion Materials, **08.01, 08.04**
D 1249–92 Specification for Octyl Ortho-Phthalate Ester Plasticizers, **08.01**
D 1250–80(1990)$^{\epsilon 1}$ Guide for Petroleum Measurement Tables (Description only; tables published separately in 12 volumes), **05.01, 10.03**
D 1251–79(1987)$^{\epsilon 1}$ Test Method for Water Vapor Permeability of Packages by Cycle Method, **15.09**
D 1252–88 Test Method for Chemical Oxygen Demand (Dichromate Oxygen Demand) of Water, **11.02**
D 1253–86(1992) Test Methods for Residual Chlorine in Water, **11.01**
D 1254 Discontinued
D 1255 Discontinued
D 1256 Discontinued
D 1257–90(1993) Specification for High-Gravity Glycerin, **06.04**
D 1258–90 Methods for Testing High-Gravity Glycerin, **06.04**
D 1259–85(1990)$^{\epsilon 1}$ Test Methods for Nonvolatile Content of Resin Solutions, **06.01**
D 1260 Discontinued—Combined with D 2244
D 1261 Discontinued
D 1262 Discontinued 1991: Test Method for Lead in New and Used Greases
D 1263–92 Test Method for Leakage Tendencies of Automotive Wheel Bearing Greases, **05.01**
D 1264–93 Test Method for Determining the Water Washout Characteristics of Lubricating Greases, **05.01**
D 1265–92 Practice for Sampling Liquefied Petroleum (LP) Gases (Manual Method), **05.01**
D 1266–91 Test Method for Sulfur in Petroleum Products (Lamp Method), **05.01**
D 1267–89 Test Method for Vapor Pressure of Liquefied Petroleum (LP) Gases (LP-Gas Method), **05.01**
D 1268 Discontinued
D 1269 Discontinued
D 1270 Discontinued
D 1271 Discontinued
D 1272–56(1993)$^{\epsilon 1}$ Specification for Pentachlorophenol, **04.10**
D 1273 Discontinued
D 1274–94 Test Methods for Chemical Analysis of Pentachlorophenol, **04.10**
D 1275–93 Test Method for Corrosive Sulfur in Electrical Insulating Oils, **10.03**
D 1276 Discontinued
D 1277 Discontinued
D 1278–91a Test Methods for Rubber from Natural Sources—Chemical Analysis, **09.01**
D 1279–82(1994) Test Method for Buffering Action of Metal Cleaners, **15.04**
D 1280–89 Method for Total Immersion Corrosion Test for Soak Tank Metal Cleaners, **15.04**
D 1281 Discontinued 1989: Test Method for Rinsing Properties of Metal Cleaners
D 1282–89a Test Method for Resistance to Airflow as an Indication of Average Fiber Diameter of Wool Top, Card Sliver, and Scoured Wool, **07.01**
D 1283–85(1990)$^{\epsilon 1}$ Test Methods for Alkali Solubility of Wool, **07.01**
D 1284 Discontinued 1991: Test Methods for Relaxation and Consolidation Dimensional Changes of Stabilized Knit Wool Fabrics
D 1285 Discontinued—Replaced by D 2644, D 2645
D 1286 Discontinued—Replaced by D 4300
D 1287–91 Test Method for pH of Engine Coolants and Antirusts, **15.05**
D 1288 Discontinued
D 1289 Discontinued—Replaced by D 2834
D 1290–82(1991)$^{\epsilon 1}$ Test Method for Sediment in Water-Emulsion Polishes by Centrifuge, **15.04**
D 1291–89 Practice for Estimation of Chlorine Requirement or Demand of Water, or Both, **11.02**
D 1292–86(1990) Test Method for Odor in Water, **11.01**
D 1293–84(1990) Test Methods for pH of Water, **11.01**
D 1294–94 Test Method for Tensile Strength and Breaking Tenacity of Wool Fiber Bundles—1-in. (25.4 mm) Gage Length, **07.01**
D 1295 Discontinued
D 1296–93 Test Method for Odor of Volatile Solvents and Diluents, **06.04**
D 1297 Discontinued
D 1298–85(1990)$^{\epsilon 1}$ Practice for Density, Relative Density (Specific Gravity), or API Gravity of Crude Petroleum and Liquid Petroleum Products by Hydrometer Method, **05.01, 10.03**

D 1299 Discontinued 1992: Test Method for Shrinkage of Molded and Laminated Thermosetting Plastics at Elevated Temperature
D 1300 Discontinued
D 1301–91 Test Methods for Chemical Analysis of White Lead Pigments, **06.01**
D 1302 Discontinued
D 1303 Discontinued
D 1304–93 Methods of Testing Adhesives Relative to Their Use as Electrical Insulation, **15.06**
D 1305–87(1993)$^{\epsilon 1}$ Specification for Electrical Insulating Paper and Paperboard—Sulfate or Kraft Layer Type, **10.01**
D 1306–88 Test Method for Phthalic Anhydride Content of Alkyd Resins and Esters Containing Other Dibasic Acids (Gravimetric), **06.03**
D 1307 Discontinued
D 1308–87 Test Method for Effect of Household Chemicals on Clear and Pigmented Organic Finishes, **06.02**
D 1309–93 Test Method for Settling Properties of Traffic Paints During Accelerated Storage, **06.02**
D 1310–86(1990)$^{\epsilon 1}$ Test Method for Flash Point and Fire Points of Liquids by Tag Open-Cup Apparatus, **06.01**
D 1311 Discontinued
D 1312–93 Test Methods for Apparent Free Phenols in Synthetic Phenolic Resins or Solutions Used for Coating Purposes, **06.03**
D 1313 Discontinued
D 1314 Discontinued—Replaced by D 2440
D 1315 Discontinued
D 1316–93 Test Method for Fineness of Grind of Printing Inks by the NPIRI Grindometer, **06.02**
D 1317–89 Test Method for Chlorine in New and Used Lubricants (Sodium Alcoholate Method), **05.01**
D 1318 Discontinued 1992: Test Method for Sodium in Residual Fuel Oil (Flame Photometric Method)
D 1319–93 Test Method for Hydrocarbon Types in Liquid Petroleum Products by Fluorescent Indicator Adsorption, **05.01**
D 1320 Discontinued 1991: Test Method for Tensile Strength of Paraffin Wax
D 1321–92 Test Method for Needle Penetration of Petroleum Waxes, **05.01, 15.09**
D 1322–90 Test Method for Smoke Point of Aviation Turbine Fuels, **05.01**
D 1323 Discontinued
D 1324–83(1993) Specification for Modified Wood, **04.10**
D 1325–76a(1992)$^{\epsilon 1}$ Specification for Ammoniacal Copper Arsenate, **04.10**
D 1326–76(1987) Method for Chemical Analysis of Ammoniacal Copper Arsenate, **04.10**
D 1327–86$^{\epsilon 1}$ Specification for Bitumen-Saturated Woven Burlap Fabrics Used in Roofing and Waterproofing, **04.04**
D 1328 Discontinued 1992—Replaced by D 2746: Test Method for Staining Properties of Asphalt
D 1329–88(1993)$^{\epsilon 1}$ Test Method for Evaluating Rubber Property—Retraction at Low Temperature (TR Test), **09.01**
D 1330–85(1990) Specification for Rubber—Sheet Gaskets, **09.02**
D 1331–89 Test Methods for Surface and Interfacial Tension of Solutions of Surface-Active Agents, **15.04**
D 1332 Discontinued—Replaced by D 668
D 1333 Discontinued—Replaced by D 1775
D 1334–91 Test Method for Wool Content of Raw Wool—Commercial Scale, **07.01**
D 1335–67(1972) Test Method for Tuft Bind of Pile Floor Coverings, **07.01**
D 1336–72(1977) Test Method for Distortion of Yarn in Woven Fabrics, **07.01**
D 1337–91 Test Method for Storage Life of Adhesives by Consistency and Bond Strength, **15.06**
D 1338–91 Test Method for Working Life of Liquid or Paste Adhesives by Consistency and Bond Strength, **15.06**
D 1339 Discontinued 1990: Test Methods for Sulfite Ion in Water
D 1340 Discontinued—Replaced by D 2778
D 1341 Discontinued
D 1342–92 Test Method for Paraffin-Type Hydrocarbons in Carnauba Wax, **15.04**
D 1343–93 Test Method for Viscosity of Cellulose Derivatives by Ball-Drop Method, **06.03**
D 1344 Discontinued
D 1345 Discontinued
D 1346 Discontinued—to be Replaced by D 115
D 1347–72(1989)$^{\epsilon 1}$ Test Methods for Methylcellulose, **06.03**
D 1348–89 Test Methods for Moisture in Cellulose, **06.03**
D 1349–87(1992)$^{\epsilon 1}$ Practice for Rubber—Standard Temperatures for Testing, **09.01**
D 1350 Discontinued
D 1351–90 Specification for Polyethylene Insulation for Electrical Wire and Cable, **10.01**
D 1352–90 Specification for Ozone-Resisting Butyl Rubber Insulation for Wire and Cable, **10.01**
D 1353–92 Test Method for Nonvolatile Matter in Volatile Solvents for Use in Paint, Varnish, Lacquer, and Related Products, **06.04**
D 1354 Discontinued
D 1355 Discontinued
D 1356–93a Terminology Relating to Atmospheric Sampling and Analysis, **11.03**
D 1357–82(1993)$^{\epsilon 1}$ Practice for Planning the Sampling of the Ambient Atmosphere, **11.03**
D 1358–86(1990)$^{\epsilon 1}$ Test Method for Spectrophotometric Diene Value of Dehydrated Castor Oil and Its Derivatives, **06.03**
D 1359 Discontinued
D 1360–90a Test Method for Fire Retardancy of Paints (Cabinet Method), **06.01**
D 1361 Discontinued
D 1362 Discontinued—Replaced by D 2804
D 1363–88(1992)$^{\epsilon 1}$ Test Method for Permanganate Time of Acetone and Methanol, **06.04**
D 1364–90 Test Method for Water in Volatile Solvents (Fischer Reagent Titration Method), **06.04**
D 1365 Discontinued—Combined with D 2244
D 1366–86(1991)$^{\epsilon 1}$ Practice for Reporting Particle Size Characteristics of Pigments, **06.03**
D 1367–90 Specification for Lubricating Qualities of Graphites, **05.01**
D 1368–89 Test Method for Trace Concentrations of Lead in Primary Reference Fuels, **05.01**
D 1369–84(1989) Practice for Quantities of Materials for Bituminous Surface Treatments, **04.03**
D 1370–84(1989)$^{\epsilon 1}$ Test Method for Contact Compatibility Between Asphaltic Materials (Oliensis test), **04.04**
D 1371 Discontinued
D 1372 Discontinued
D 1373 Discontinued
D 1374–89 Test Method of Aerated Total Immersion Corrosion Test for Metal Cleaners, **15.04**
D 1375 Discontinued—Replaced by D 3511, D 3512
D 1376 Discontinued—Replaced by D 3887
D 1377 Discontinued—Replaced by D 1775
D 1378 Discontinued—Combined with D 1117
D 1379 Discontinued
D 1380 Discontinued—Replaced by D 1422, D 1423, D 1907, D 2256, D 2257, D 2494
D 1381 Discontinued—Replaced by D 3992
D 1382 Discontinued 1991: Test Method for Susceptibility of Dry Adhesive Films to Attack by Roaches
D 1383 Discontinued 1991: Test Method for Susceptibility of Dry Adhesive Films to Attack by Laboratory Rats
D 1384–93 Test Method for Corrosion Test for Engine Coolants in Glassware, **15.05**
D 1385–88(1991) Test Method for Hydrazine in Water, **11.01**
D 1386–83(1993)$^{\epsilon 1}$ Test Method for Acid Number (Empirical) of Synthetic and Natural Waxes, **15.04**
D 1387–89 Test Method for Saponification Number (Empirical) of Synthetic and Natural Waxes, **15.04**
D 1388–64(1975)$^{\epsilon 3}$ Test Methods for Stiffness of Fabrics, **07.01**
D 1389–90 Methods for Dielectric Proof-Voltage Testing of Thin Solid Electrical Insulating Materials, **10.01**
D 1390 Discontinued 1989: Test Method for Rubber Property—Stress Relaxation in Compression
D 1391 Discontinued
D 1392–92 Specification for Safflower Oil, **06.03**
D 1393 Discontinued
D 1394–76(1991)$^{\epsilon 1}$ Test Methods for Chemical Analysis of White Titanium Pigments, **06.01**
D 1395 Discontinued 1989: Test Method for Abrasion Resistance of Clear Floor Coatings
D 1396–92 Test Methods for Chemical Analysis of Poly(Vinyl Butyral), **06.03**
D 1397–93 Test Method for Unsaponifiable Matter in Alkyd Resins and Resin Solutions, **06.03**
D 1398–93 Test Method for Fatty Acid Content of Alkyd Resins and Alkyd Resin Solutions, **06.03**
D 1399–90 Test Method for Unsaponifiable Content of Tricresyl Phosphate, **06.04**
D 1400–93 Test Method for Nondestructive Measurement of Dry Film Thickness of Nonconductive Coatings Applied to a Nonferrous Metal Base, **06.01**
D 1401–91 Test Method for Water Separability of Petroleum Oils and Synthetic Fluids, **05.01**
D 1402 Discontinued
D 1403–91 Test Method for Cone Penetration of Lubricating Grease Using One-Quarter and One-Half Scale Cone Equipment, **05.01**
D 1404–88 Test Method for Estimation of Deleterious Particles in Lubricating Grease, **05.01**
D 1405–90 Test Method for Estimation of Net Heat of Combustion of Aviation Fuels, **05.01**
D 1406–65(1990) Practice for Liquid Calibration of Tanks (Available as Separate Reprint Only),
D 1407–65(1990) Practice for Measurement and Calibration of Barge Tanks (Available as Separate Reprint Only),
D 1408–65(1990) Practice for Measurement and Calibration of Spherical and Spheroidal Tanks (Available as Separate Reprint Only),
D 1409–65(1990) Practice for Measurement and Calibration of Tank Car Tanks (Available as Separate Reprint Only),
D 1410–65(1990) Practice for Measurement and Calibration of Stationary Horizontal Tanks (Available as Separate Reprint Only),
D 1411–93 Test Methods for Water-Soluble Chlorides Present as Admixes in Graded Aggregate Road Mixes, **04.08**
D 1412–93 Test Method for Equilibrium Moisture of Coal at 96 to 97 Percent Relative Humidity and 30°C, **05.05**

D 1413–76(1986) Methods of Testing Wood Preservatives by Laboratory Soil-Block Cultures, **04.10**
D 1414–90 Test Methods for Rubber O-Rings, **09.02**
D 1415–88 Test Method for Rubber Property—International Hardness, **09.01**
D 1416–89 Methods for Rubber from Synthetic Sources—Chemical Analysis, **09.01**
D 1417–90 Methods of Testing Rubber Latices—Synthetic, **09.01**
D 1418–94 Practice for Rubber and Rubber Latices—Nomenclature, **09.01**
D 1419 Discontinued
D 1420 Discontinued
D 1421 Discontinued—Replaced by D 3040 and D 3488
D 1422–92 Test Method for Twist in Single Spun Yarns by the Untwist-Retwist Method, **07.01**
D 1423–92 Test Method for Twist in Yarns by the Direct-Counting Method, **07.01**
D 1424–83 Test Method for Tear Resistance of Woven Fabrics by Falling-Pendulum (Elmendorf) Apparatus, **07.01**
D 1425–89 Test Method for Unevenness in Textile Strands Using Capacitance Testing Equipment, **07.01**
D 1426–93 Test Methods for Ammonia Nitrogen in Water, **11.01**
D 1427 Discontinued
D 1428 Discontinued 1990: Test Methods for Sodium and Potassium in Water and Water-Formed Deposits by Flame Photometry
D 1429–86 Test Methods for Specific Gravity of Water and Brine, **11.01**
D 1430–91a Specification for Polychlorotrifluoroethylene (PCTFE) Plastics, **08.01**
D 1431 Discontinued—Replaced by D 4203
D 1432 Discontinued—Replaced by D 2287
D 1433 Discontinued 1988—Replaced by D 4549
D 1434–82(1992) Test Method for Determining Gas Permeability Characteristics of Plastic Film and Sheeting, **15.09**
D 1435–85 Practice for Outdoor Weathering of Plastics, **08.01**
D 1436–93 Test Methods for Application of Emulsion Floor Polishes to Substrates for Testing Purposes, **15.04**
D 1437 Discontinued
D 1438 Discontinued—Replaced by D 1787
D 1439–83a(1989)$^{\epsilon 1}$ Test Methods for Sodium Carboxymethylcellulose, **06.03**
D 1440–90 Test Method for Length and Length Distribution of Cotton Fibers (Array Method), **07.01**
D 1441–87(1993) Practice for Sampling Cotton Fibers for Testing, **07.01**
D 1442–93 Test Method for Maturity of Cotton Fibers (Sodium Hydroxide Swelling and Polarized Light Procedures), **07.01**
D 1443 Discontinued—Replaced by D 1442
D 1444 Discontinued
D 1445–90 Test Method for Breaking Strength and Elongation of Cotton Fibers (Flat Bundle Method), **07.01**
D 1446 Discontinued
D 1447–89(1994) Test Method for Length and Length Uniformity of Cotton Fibers by Fibrograph Measurement, **07.01**
D 1448–90 Test Method for Micronaire Reading of Cotton Fibers, **07.01**
D 1449 Discontinued
D 1450 Discontinued
D 1451 Discontinued—Replaced by D 2812
D 1452–80(1990) Practice for Soil Investigation and Sampling by Auger Borings, **04.08**
D 1453 Discontinued—Replaced by D 2645
D 1454 Discontinued—Replaced by D 2644 and D 2645
D 1455–87(1992)$^{\epsilon 1}$ Test Method for 60-deg Specular Gloss of Emulsion Floor Polish, **15.04**
D 1456–86(1991)$^{\epsilon 1}$ Test Method for Rubber Property—Elongation at Specific Stress, **09.01**
D 1457–91a Specification for PTFE Molding and Extrusion Materials, **08.01**
D 1458–91 Test Methods for Fully Cured Silicone Rubber-Coated Glass Fabric and Tapes for Electrical Insulation, **10.01**
D 1459–93 Specification for Silicone Varnished Glass Cloth and Tape for Electrical Insulation, **10.01**
D 1460–86(1991)$^{\epsilon 1}$ Test Method for Rubber Property—Change in Length During Liquid Immersion, **09.01**
D 1461–85 Test Method for Moisture or Volatile Distillates in Bituminous Paving Mixtures, **04.03**
D 1462–92 Specification for Refined Soybean Oil, **06.03**
D 1463 Discontinued 1989: Specification for Biaxially Oriented Styrene Plastics Sheet
D 1464–90 Test Method for Differential Dyeing Behavior of Cotton, **07.01**
D 1465–90 Test Method for Blocking and Picking Points of Petroleum Wax, **05.01, 15.09**
D 1466–86(1990) Test Method for Sampling Liquid Oils and Fatty Acids Commonly Used in Paints, Varnishes, and Related Materials, **06.03**
D 1467–89 Guide for Testing Fatty Acids Used in Protective Coatings, **06.03**
D 1468–93 Test Method for Volatile Matter in Tricresyl Phosphate, **06.04**
D 1469–93 Test Method for Total Rosin Acids Content of Coating Vehicles, **06.03**
D 1470 Discontinued—Replaced by D 1905
D 1471 Discontinued
D 1472 Discontinued
D 1473 Discontinued
D 1474–92 Test Methods for Indentation Hardness of Organic Coatings, **06.01**
D 1475–90 Test Method for Density of Paint, Varnish, Lacquer, and Related Products, **06.01**
D 1476–88(1992)$^{\epsilon 1}$ Test Method for Heptane Miscibility of Lacquer Solvents, **06.04**
D 1477 Discontinued—Replaced by D 2386
D 1478–91 Test Method for Low-Temperature Torque of Ball Bearing Greases, **05.01**
D 1479 Discontinued
D 1480–93 Test Method for Density and Relative Density (Specific Gravity) of Viscous Materials by Bingham Pycnometer, **05.01**
D 1481–93 Test Method for Density and Relative Density (Specific Gravity) of Viscous Materials by Lipkin Bicapillary Pycnometer, **05.01, 10.03**
D 1482 Discontinued—Combined with D 2244
D 1483–84(1989)$^{\epsilon 1}$ Test Method for Oil Absorption of Pigments by Gardner-Coleman Method, **06.01**
D 1484 Discontinued—Replaced by D 2240
D 1485–86(1993) Method for Rubber for Natural Sources—Sampling and Sample Preparation, **09.01**
D 1486 Discontinued
D 1487 Discontinued—Replaced by D 1905
D 1488–92 Test Method for Amylaceous Matter in Adhesives, **15.06**
D 1489–93 Test Method for Nonvolatile Content of Aqueous Adhesives, **15.06**
D 1490–93 Test Method for Nonvolatile Content of Urea-Formaldehyde Resin Solutions, **15.06**
D 1491 Discontinued
D 1492–92 Test Method for Bromine Index of Aromatic Hydrocarbons by Coulometric Titration, **06.04**
D 1493–92 Test Method for Solidification Point of Industrial Organic Chemicals, **06.04**
D 1494–92 Test Method for Diffuse Light Transmission Factor of Reinforced Plastics Panels, **08.04**
D 1495 Discontinued—Combined with D 2244
D 1496 Discontinued—Replaced by D 3370
D 1497 Discontinued—Combined with D 1068
D 1498–93 Practice for Oxidation-Reduction Potential of Water, **11.01**
D 1499–92a Practice for Operating Light- and Water-Exposure Apparatus (Carbon-Arc Type) for Exposure of Plastics, **08.01**
D 1500–91 Test Method for ASTM Color of Petroleum Products (ASTM Color Scale), **05.01, 10.03**
D 1501 Discontinued
D 1502 Discontinued
D 1503 Discontinued
D 1504 Discontinued 1989: Recommended Practice for Determining Orientation Release Stress of Plastic Sheeting
D 1505–90 Test Method for Density of Plastics by the Density-Gradient Technique, **08.01**
D 1506–94 Test Method for Carbon Black—Ash Content, **09.01**
D 1507 Discontinued
D 1508–93 Test Method for Carbon Black, Pelleted—Fines Content, **09.01**
D 1509–93a Test Method for Carbon Black—Heating Loss, **09.01**
D 1510–94 Test Method for Carbon Black—Iodine Adsorption Number, **09.01**
D 1511–89a Test Method for Carbon Black—Pellet Size Distribution, **09.01**
D 1512–93 Test Method for Carbon Black—pH Value, **09.01**
D 1513–89(1993)$^{\epsilon 1}$ Test Method for Carbon Black, Pelleted—Pour Density, **09.01**
D 1514–90 Test Method for Carbon Black—Sieve Residue, **09.01**
D 1515 Discontinued
D 1516–84(1991)$^{\epsilon 1}$ Test Method for Width of Leather, **15.04**
D 1517–80(1993) Definitions of Terms Relating to Leather, **15.04**
D 1518–85(1990)$^{\epsilon 1}$ Test Method for Thermal Transmittance of Textile Material, **07.01**
D 1519–88(1993)$^{\epsilon 1}$ Test Method for Rubber Chemicals—Melting Range, **09.01**
D 1520 Discontinued—Replaced by D 1679
D 1521 Discontinued
D 1522 Discontinued—Combined with D 15
D 1523–89 Method for Synthetic Rubber Insulation for Wire and Cable, 90°C Operation, **10.01**
D 1524–84(1990)$^{\epsilon 1}$ Method for Visual Examination of Used Electrical Insulating Oils of Petroleum Origin in the Field, **10.03**
D 1525–91 Test Method for Vicat Softening Temperature of Plastics, **08.01**
D 1526 Discontinued
D 1527–89 Specification for Acrylonitrile-Butadiene-Styrene(ABS) Plastic Pipe, Schedules 40 and 80, **08.04**
D 1528 Discontinued
D 1529 Discontinued
D 1530 Discontinued—Combined with D 882
D 1531–90 Test Method for Relative Permittivity (Dielectric Constant) and Dissipation Factor of Polyethylene by Liquid Displacement Procedure, **10.01**
D 1532 Discontinued 1992—Replaced by D 709: Specification for Polyester Glass-Mat Sheet Laminate
D 1533–88 Test Method for Water in Insulating Liquids (Karl Fischer Method), **10.03**
D 1534–90 Test Method for Approximate Acidity in Electrical Insulating Liquids by Color-Indicator Titration, **10.03**
D 1535–89 Method for Specifying Color by the Munsell System, **06.01, 15.09**
D 1536 Discontinued—Combined with D 2244

F 568–93a Specification for Carbon and Alloy Steel Externally Threaded Metric Fasteners, **15.08**
F 569 Discontinued 1989: Test Method for Filterability Index of Reagent-Grade Water and High-Purity Waters for Microelectronic Device Processing
F 570–90 Test Methods for Transistor Collector-Emitter Saturation Voltage, **10.04**
F 571–87(1993)$^{\epsilon 1}$ Practice for Installation of Exit Devices in Security Areas, **15.07**
F 572–89 Practice for Application of Photographic Security Cameras in Financial Institutions, **15.07**
F 573 Discontinued 1993: Specification for Residential Zinc-Coated Steel Chain-Link Fence Fabric
F 574–88 Test Method for Evaluation of Polysilicon, **10.05**
F 575 Discontinued
F 576–90 Method for Measurement of Insulator Thickness and Refractive Index on Silicon Substrates by Ellipsometry, **10.05**
F 577–83(1993)$^{\epsilon 1}$ Test Method for Particle Size Measurement of Dry Toners, **15.09**
F 578–78(1987)$^{\epsilon 1}$ Test Method for Lasing Threshold and Slope Efficiency of Neodymium-Doped Laser Rods, **06.01**
F 579–80(1987)$^{\epsilon 1}$ Test Method for Face Flatness by Optical Non-Contact Technique, **06.01**
F 580–78(1991)$^{\epsilon 1}$ Test Method for Adhesion Strength of Bondable Films to Substrates in Ribbon-Wire Bonds, **10.04**
F 581–78(1991)$^{\epsilon 1}$ Practice for Accelerated Aging of Photoresist, **10.05**
F 582–78(1991)$^{\epsilon 1}$ Practice for Preparation of Photoresist for Analysis of Inorganic Contaminants, **10.05**
F 583–82(1990)$^{\epsilon 1}$ Test Method for Photoresist Cleanness-Filterability, **10.05**
F 584–87(1993) Practice for Visual Inspection of Semiconductor Lead Bonding Wire, **10.04**
F 585–93 Practice for Insertion of Flexible Polyethylene Pipe into Existing Sewers, **08.04**
F 586–79(1989) Test Method for Leak Rates Versus *y* Stresses and *m* Factors for Gaskets, **09.02**
F 587–78(1990)$^{\epsilon 1}$ Practice for Sampling Ground Meat in Blenders, **15.07**
F 588–85 Test Methods for Resistance of Window Assemblies to Forced Entry Excluding-Glazing, **04.07**
F 589–92 Consumer Safety Specification for Non-Powder Guns, **15.07**
F 590–92 Consumer Safety Specification for Non-Powder Gun Projectiles and Propellants, **15.07**
F 591 Discontinued
F 592–84(1990)$^{\epsilon 1}$ Definitions of Terms Relating to Collated and Cohered Fasteners and Their Application Tools, **15.08**
F 593–91 Specification for Stainless Steel Bolts, Hex Cap Screws, and Studs, **15.08**
F 594–91 Specification for Stainless Steel Nuts, **15.08**
F 595–85(1990) Methods for Testing Vacuum Cleaner Hose for Durability and Reliability (All-Plastic Hose), **15.07**
F 596–82(1993) Practice for Comparative Evaluation of the Imaging Properties of Dry Electrostatic Toners, **15.09**
F 597–83(1992) Practice for Evaluation of One-Time Carbon Paper in Carbon Interleaved Business Forms by Use of an Electric Typewriter, **15.09**
F 598–86(1991) Practice for Determining the Resistance of Carbonless Papers to Capsular Damage, **15.09**
F 599–93 Specification for Poly(Vinylidene Chloride) (PVDC) Plastic-Lined Ferrous Metal Pipe and Fittings, **08.04**
F 600 Discontinued 1991: Practice for Nondestructive Testing Ultrasonic Evaluation of Socket and Butt Joints of Thermoplastic Piping
F 601–92 Practice for Fluorescent Penetrant Inspection of Metallic Surgical Implants, **13.01**
F 602–87(1993) Standard Criteria for Implantable Thermoset Epoxy Plastics, **13.01**
F 603–83 Specification for High-Purity Dense Aluminum Oxide for Surgical Implant Application, **13.01**
F 604–94 Specification for Silicone Elastomers Used in Medical Applications, **13.01**
F 605–88(1992) Practice for Determining the Compatibility of One-Time Carbon Paper with Carbonless Copy Papers When Interleaved into the Same Form, **15.09**
F 606–90 Method for Conducting Tests to Determine the Mechanical Properties of Externally and Internally Threaded Fasteners, Washers, and Rivets, **15.08**
F 606M–91 Test Method for Conducting Tests to Determine the Mechanical Properties of Externally and Internally Threaded Fasteners, Washers, and Rivets [Metric], **15.08**
F 607–90 Test Method for Adhesion of Gasket Materials to Metal Surfaces, **09.02**
F 608–89 Laboratory Test Method for Evaluation of Carpet-Embedded Dirt Removal Effectiveness of Household Vacuum Cleaners, **15.07**
F 609–79(1989)$^{\epsilon 1}$ Test Method for Static Slip Resistance of Footwear, Sole, Heel, or Related Materials by Horizontal Pull Slipmeter (HPS), **15.07**
F 610/F610M–91 Test Method for Evaluating the Quality of Molded Poly(Vinyl Chloride) (PVC) Plastic Pipe Fittings by the Heat Reversion Technique, **08.04**
F 611–79(1987)$^{\epsilon 1}$ Test Method for Wavefront Distortion of Nominally Plane Optical Elements Due to Refractive Index Inhomogeneity, **06.01**
F 612 Discontinued 1993: Practice for Cleaning Surfaces of Polished Silicon Slices
F 613–93 Test Method for Measuring Diameter of Semiconductor Wafers, **10.05**
F 614–80(1991) Test Method for Distortion of Optical Lenses Used in Photomask Fabrication, **10.05**
F 615–79(1988) Practice for Determining Safe Current Pulse Operating Regions for Metallization on Semiconductor Components, **10.04**
F 616–92 Method for Measuring MOSFET Drain Leakage Current, **10.04**
F 617–91 Method for Measuring MOSFET Linear Threshold Voltage, **10.04**
F 618 Discontinued
F 619–79(1991) Practice for Extraction of Medical Plastics, **13.01**
F 620–92 Specification for Titanium 6Al-4V ELI Alloy Forgings for Surgical Implants, **13.01**
F 621–92 Specification for Stainless Steel Forgings for Surgical Implants, **13.01**
F 622–79(1993) Specification for Preformed Cranioplasty Plates That Can Be Altered, **13.01**
F 623–89 Performance Specification for Foley Catheter, **13.01**
F 624–93 Guide for Evaluation of Thermoplastic Polyurethane Solids and Solutions for Biomedical Applications, **13.01**
F 625–94 Practice for Classifying Water Bodies for Spill Control Systems, **11.04**
F 626–91 Specification for Fence Fittings, **01.06**
F 627–89(1993)$^{\epsilon 1}$ Practice for Testing Flake of One-Time Film Typewriter Ribbons, **15.09**
F 628–93 Specification for Acrylonitrile-Butadiene-Styrene (ABS) Schedule 40 Plastic Drain, Waste, and Vent Pipe With a Cellular Core, **08.04**
F 629–86(1992) Practice for Radiography of Cast Metallic Surgical Implants, **13.01**
F 630–80 Specification for Safety Consideration for Household Vacuum Cleaners, **15.07**
F 631–93 Guide for Collecting Skimmer Performance Data in Controlled Environments, **11.04**
F 632–90 Method for Measurement of Small-Signal Common Emitter Current Gain of Transistors at High Frequencies, **10.04**
F 633–83 Practice for Use of the High-Speed Printer as a Test Instrument for Carbon Paper, **15.09**
F 634 Discontinued
F 635–85(1991) Guide for Selection of Tests for Material Properties of Liquid Thermoset Encapsulating Compounds for Electronic and Microelectronic Encapsulation, **10.04**
F 636–85(1991) Guide for Selection of Tests for Material Properties of Transfer Molding Compounds for Electronic and Microelectronic Encapsulation, **10.04**
F 637–85 Specification for Format, Physical Properties and Test Methods for 19 mm and 35 mm Testable Tape Carrier Bonded Semiconductor Devices, **10.04**
F 638–88 Specification for Fine Aluminum-1 % Magnesium Wire for Semiconductor Lead-Bonding, **10.04**
F 639–93 Specification for Polyethylene Plastics for Medical Applications, **13.01**
F 640–79(1994)$^{\epsilon 1}$ Test Methods for Radiopacity of Plastics for Medical Use, **13.01**
F 641–93 Specification for Implantable Epoxy Electronic Encapsulants, **13.01**
F 642–79(1984) Specification for Stainless Steel Flexible Wire for Surgical Fixations for Soft Tissue, **13.01**
F 643 Discontinued 1993—Replaced by F 1091: Specification for Wrought Cobalt-Chromium Alloy Flexible Wire for Surgical Fixations for Soft Tissue
F 644 Discontinued 1993—Replaced by F 1091: Specification for Wrought Cobalt-Chromium Alloy Flexible Wire for Surgical Fixations for Bone
F 645–93 Guide for Selection, Design, and Installation of Thermoplastic Water Pressure Piping Systems, **08.04**
F 646 Not yet assigned
F 647–85(1993) Practice for Evaluating and Specifying Implantable Shunt Assemblies for Neurosurgical Application, **13.01**
F 648–84 Specification for Ultra-High-Molecular-Weight Polyethylene Powder and Fabricated Form for Surgical Implants, **13.01**
F 649–80(1992) Practice for Secondary Calibration of Airborne Particle Counter Using Comparison Procedures, **10.05**
F 650 Discontinued 1990: Practice for Determining Relative Bias of Two Particle Counters Using Comparison Procedures
F 651 Discontinued
F 652 Discontinued 1992: Methods for Measuring Mica Stampings or Substitutes Used in Electron Devices and Lamps
F 653–84(1990) Method for Evaluation of Electrostatic Masters, **15.09**
F 654–91 Specification for Residential Chain Link Fence Gates, **01.06**
F 655–89 Specification for Test Carpets and Pads for Vacuum Cleaner Testing, **15.07**
F 656–93 Specification for Primers for Use in Solvent Cement Joints of Poly(Vinyl Chloride) (PVC) Plastic Pipe and Fittings, **08.04**
F 657–92 Test Method for Measuring Warp and Total Thickness Variation on Silicon Wafers by Noncontact Scanning, **10.05**
F 658–87(1992) Practice for Defining Size Calibration, Resolution, and Counting Accuracy of Liquid Borne Particle Counter Using Near-Monodisperse Spherical Particulate Materials, **10.05**
F 659–92 Specification for High Impact Resistant Eye Protective Devices, **15.07**
F 660–83(1993) Practice for Comparing Particle Size in the Use of Alternative Types of Particle Counters, **14.02**
F 661–92 Practice for Particle Count and Size Distribution Measurement in Batch Samples for Filter Evaluation Using an Optical Particle Counter **14.02**
F 662–86 Method for Measurement of Particle Count and Size Distribution in

EXHIBIT 23

1995 Annual Book of ASTM Standards

Index

Alphanumeric List

ASTM Standards

Standards:

Specifications	2633
Test Methods	6776
Terminology	203
Total	9612

Each ASTM Standard has a unique serial designation. It is comprised of a capital letter indicating general classification (A, ferrous metals; B, nonferrous metals; C, cementitious, ceramic, concrete, and masonry materials; D, miscellaneous materials; E, miscellaneous subjects; F, materials for specific applications; G, corrosion, deterioration, and degradation of materials; ES, emergency standards; P, proposals; PS, provisional standards), a serial number (one to four digits), a dash, and the year of issue.

In each serial designation, the number following the dash indicates the year of original adoption as standard or, in the case of revision, the year of last revision. Thus, standards adopted or revised during the year 1995 have as their final number, 95. A letter following this number indicates more than one revision during that year, that is 95a indicates the second revision in 1995, 95b the third revision, etc. Standards that have been reapproved without change are indicated by the year of last reapproval in parentheses as part of the designation number, for example, (1995). A superscript epsilon indicates an editorial change since the last revision or reapproval; ϵ1 for the first change, ϵ2 for the second, etc.

If a standard is written in acceptable metric units and has a companion standard written in inch-pound units (or other units), the metric standard is identified by a letter M after the serial number; this standard contains "hard metric" units.

If a standard is written in inch-pound units (or other units) and acceptable metric units, the document is identified by a dual alphanumeric designation.

When reference is made to a standard, the *complete* designation should be given. Best practice is to state the *designation and title.*

The boldface number(s) following the title refer to the volume(s) of the *Annual Book of ASTM Standards* in which the standard appears.

This list includes only those standards which appear in the 1995 edition of each volume of the *Annual Book of ASTM Standards*. New and revised standards that were approved after the closing date for the volume are available as separate reprints and will be listed in next year's edition.

Each ASTM standard is available as a separate reprint from ASTM. Price and order information are available from ASTM Customer Service, 100 Barr Harbor Drive, West Conshohocken, PA 19428-2959, 610-832-9585.

for Service at High Temperatures; Replaced by A 335

A 281 Discontinued 1947: Specification for Mild to Medium Strength Carbon-Steel Castings for General Application; Replaced by A 27

A 282 Discontinued 1945: Specification for High-Strength Steel Castings for Structural Purposes; Replaced by A 148

A 283/A283M–93a Specification for Low and Intermediate Tensile Strength Carbon Steel Plates, **01.04**

A 284/A284M mditDiscontinued 1992: Specification for Low and Intermediate Tensile Strength Carbon-Silicon Steel Plates for Machine Parts and General Construction; Replaced by At283/At283M

A 285/A285M–90 Specification for Pressure Vessel Plates, Carbon Steel, Low- and Intermediate-Tensile Strength, **01.04**

A 286 Discontinued 1960: Specification for Heat-Treated Alloy-Steel Bars; Replaced by A 434

A 287 Discontinued 1955: Specification for Rolled Carbon-Steel Locomotive Frames

A 288–91 Specification for Carbon and Alloy Steel Forgings for Magnetic Retaining Rings for Turbine Generators, **01.05**

A 289–94 Specification for Alloy Steel Forgings for Nonmagnetic Retaining Rings for Generators, **01.05**

A 290–85(1990)$^{\epsilon 1}$ Specification for Carbon and Alloy Steel Forgings for Rings for Reduction Gears, **01.05**

A 291–92 Specification for Steel Forgings, Carbon and Alloy, for Pinions, Gears and Shafts for Reduction Gears, **01.05**

A 292 Discontinued 1968: Specification for Carbon and Alloy Steel Forgings for Turbine Generator Rotors and Shafts; Replaced by A 469

A 293 Discontinued 1984: Specification for Steel Forgings, Carbon and Alloy, for Turbine Generator Rotors and Shafts; Replaced by A 470

A 294 Discontinued 1988: Specification for Alloy Steel Forgings for Turbine Wheels and Disks; Replaced by A 471

A 295–4 Specification for High-Carbon Anti-Friction Bearing Steel, **01.05**

A 296 Discontinued 1980: Specification for Corrosion-Resistant Iron-Chromium and Iron-Chromium Nickel and Nickel-B Alloy Castings; Replaced by A 743, A 744

A 297/A297M–93 Specification for Steel Castings, Iron-Chromium and Iron-Chromium-Nickel, Heat-Resistant, for General Application, **01.02**

A 298 Discontinued 1970: Specification for Corrosion-Resistant Chromium and Chromium-Nickel Steel Covered Welding Electrodes; Replaced by A 298

A 299/A299M–90 Specification for Pressure Vessel Plates, Carbon Steel, Manganese-Silicon, **01.04**

A 300 Discontinued 1975: Specification for Notch Toughness Requirements for Normalized Steel Plates for Pressure Vessels

A 301 Discontinued 1956: Specification for Chromium-Molybdenum Steel Plates for Boilers and Other Pressure Vessels; Replaced by A 387

A 302/A302M–90 Specification for Pressure Vessel Plates, Alloy Steel, Manganese-Molybdenum and Manganese-Molybdenum-Nickel, **01.04**

A 303 Discontinued 1970: Specification for Hot-Rolled Carbon Steel Strip of Structural Quality; Replaced by A 570

A 304–90 Specification for Steel Bars, Alloy, Subject to End-Quench Hardenability Requirements, **01.05**

A 305 Discontinued 1968: Specification for Minimum Requirements for the Deformations of Deformed Steel Bars for Concrete Reinforcement; Replaced by A 615, A 616, A 617

A 306 Discontinued 1975: Specification for Carbon Steel Bars Subject to Mechanical Property Requirements; Replaced by A 663, A 675

A 307–94 Specification for Carbon Steel Bolts and Studs, 60 000 PSI Tensile Strength, **15.08**

A 308–94 Specification for Steel Sheet, Terne (Lead-Tin Alloy) Coated by the Hot-Dip Process, **01.06**

A 309–94a Test Method for Weight and Composition of Coating on Terne Sheet by the Triple-Spot Test, **01.06**

A 310 Discontinued 1949: Specification for Flat-Rolled Electrical Steel; Redesignated A 345

A 311/A311M–90b Specification for Steel Bars, Carbon, Stress-Relieved Cold-Drawn, Subject to Mechanical Property Requirements, **01.05**

A 312/A312M–94b Specification for Seamless and Welded Austenitic Stainless Steel Pipes, **01.01**

A 313–92 Specification for Chromium-Nickel Stainless and Heat-Resisting Steel Spring Wire, **01.03**

A 314–94b Specification for Stainless and Heat-Resisting Steel Billets and Bars for Forging, **01.05**

A 315 Discontinued 1952: Specification for Seamless Ferritic Alloy-Steel Pipe for Service at High Temperatures; Replaced by A 335

A 316 Discontinued 1969: Specification for Low-Alloy Steel Covered Filler Metal Arc-Welding Electrodes

A 317 Discontinued 1975: Method of Macroetch Testing and Inspection of Steel Forgings; Replaced by E 381

A 318 Discontinued 1976: Method of Tension Testing and Inspection of Steel Spring Wire; Replaced by A 370

A 319–71(1991) Specification for Gray Iron Castings for Elevated Temperatures for Non-Pressure Containing Parts, **01.02**

A 320/A320M–94a Specification for Alloy Steel Bolting Materials for Low-Temperature Service, **01.01, 15.08**

A 321–90 Specification for Steel Bars, Carbon, Quenched and Tempered, **01.05**

A 322–91 Specification for Steel Bars, Alloy, Standard Grades, **01.05**

A 323–93 Specification for Ferroboron, **01.02**

A 324–73(1992) Specification for Ferrotitanium, **01.02**

A 325–94 Specification for Structural Bolts, Steel, Heat Treated, 120/105 ksi Minimum Tensile Strength, **15.08**

A 325M–93 Specification for High-Strength Bolts for Structural Steel Joints [Metric], **15.08**

A 326 Discontinued 1990; Specification for Zinc-Coated (Galvanized) High Tensile Steel Telephone and Telegraph Line Wire

A 327–91 Test Methods for Impact Testing of Cast Irons, **01.02**

A 327M–91 Test Methods for Impact Testing of Cast Irons (Metric), **01.02**

A 328/A328M–93a Specification for Steel Sheet Piling, **01.04**

A 329 Discontinued 1965: Specification for Heat-Treated Steel Tires; Replaced by A 551

A 330 Discontinued 1954: Methods and Definition for Mechanical Testing of Steel Products; Replaced by A 370

A 331–90 Specification for Steel Bars, Alloy, Cold-finished, **01.05**

A 332 Discontinued 1965: Specification for Nickel-Chromium-Molybdenum Steel Bars for Springs; Replaced by A 689

A 333/A333M–94 Specification for Seamless and Welded Steel Pipe for Low-Temperature Service, **01.01**

A 334/A334M–91 Specification for Seamless and Welded Carbon and Alloy-Steel Tubes for Low-Temperature Service, **01.01**

A 335/A335M–94 Specification for Seamless Ferritic Alloy-Steel Pipe for High-Temperature Service, **01.01**

A 336/A336M–94 Specification for Steel Forgings, Alloy, for Pressure and High-Temperature Parts, **01.05**

A 337 Discontinued 1955: Specification for Zinc-Coated Iron or Steel Chain-link Fence Fabric Galvanized before Weaving; Replaced by A 392

A 338–84(1994)$^{\epsilon 1}$ Specification for Malleable Iron Flanges, Pipe Fittings, and Valve Parts for Railroad, Marine, and Other Heavy Duty Service at Temperatures up to 650°F (345°C), **01.02**

A 339 Discontinued 1965: Specification for Iron Castings; Replaced by A 536

A 340–93 Terminology of Symbols and Definitions Relating to Magnetic Testing, **03.04**

A 341–89$^{\epsilon 1}$ Test Method for Direct Current Magnetic Properties of Materials Using D-C Permeameters and the Ballistic Test Methods, **03.04**

A 342–84(1988) Test Methods for Permeability of Feebly Magnetic Materials, **03.04**

A 343–93a Test Method for Alternating-Current Magnetic Properties of Materials at Power Frequencies Using Wattmeter-Ammeter-Voltmeter Method and 25-cm Epstein Test Frame, **03.04**

A 344 Discontinued 1977: Methods of Electrical and Mechanical Properties of Magnetic Materials; Replaced by A 370, A 712, A 717, A 718, A 719, A 720

A 345–90 Specification for Flat-Rolled Electrical Steels for Magnetic Applications, **03.04**

A 346–74(1993)$^{\epsilon 1}$ Test Method for Alternating-Current Magnetic Performance of Laminated Core Specimens Using the Dieterly Bridge Method, **03.04**

A 347–85(1991) Test Method for Alternating Current Magnetic Properties of Materials Using the Dieterly Bridge Method with 25-cm Epstein Frame, **03.04**

A 348–84(1988) Test Method for Alternating-Current Magnetic Properties of Materials Using the Wattmeter-Ammeter-Voltmeter Method, 100 to 10 000 HZ and 25-cm Epstein Frame, **03.04**

A 349 Discontinued 1984: Test Methods for Alternating-Current Magnetic Properties of Materials Using the Wattmeter-Ammeter-Voltmeter Method, 50 to 60 Hz and 50 cm Epstein Frame

A 350/A350M–94 Specification for Forgings, Carbon and Low-Alloy Steel, Requiring Notch Toughness Testing for Piping Components, **01.01**

A 351/A351M–94 Specification for Castings, Austenitic, Austenitic-Ferritic (Duplex), for Pressure-Containing Parts, **01.02**

A 352/A352M–93 Specification for Steel Castings, Ferritic and Martensitic, for Pressure-Containing Parts, Suitable for Low-Temperature Service, **01.02**

A 353/A353M–93 Specification for Pressure Vessel Plates, Alloy Steel, 9 Percent Nickel, Double-Normalized and Tempered, **01.04**

A 354–95 Specification for Quenched and Tempered Alloy Steel Bolts, Studs, and Other Externally Threaded Fasteners, **15.08**

A 355–89(1994)$^{\epsilon 1}$ Specification for Steel Bars, Alloys, for Nitriding, **01.05**

A 356/A356M–92 Specification for Steel Castings, Carbon, Low Alloy, and Stainless Steel, Heavy-Walled for Steam Turbines, **01.02**

A 357 Discontinued 1973: Specification for Pressure Vessel Plates, Alloy Steel, Five Percent Chromium, 0.5 percent Molybdenum; Replaced by A 387

A 358/A358M–94a Specification for Electric-Fusion-Welded Austenitic Chromium-Nickel Alloy Steel Pipe for High-Temperature Service, **01.01**

A 359 Discontinued 1954: Methods and Definitions for Mechanical Testing of Structural Steel; Replaced by A 370

A 360 Discontinued 1993: Method of Testing Chilled and White Iron Castings

A 360M Discontinued 1993: Method of Testing Chilled and White Iron Castings [Metric]

A 361/A361M–94 Specification for Steel Sheet, Zinc-Coated (Galvanized) by the Hot-Dip Process for Roofing and Siding, **01.06**

A 362 Discontinued 1977: Specification for Iron-Chromium and Iron-Chromium-Nickel Alloy Tubular Centrifugal Castings for General Applications

A 363–89 Specification for Zinc-Coated (Galvanized) Steel Overhead Ground Wire Strand, **01.06**

A 364 Discontinued 1959: Specification for Cold-Finished Heat-Treated Alloy-Steel Bars; Replaced by A 434

A 365 Discontinued 1968: Specification for Cold-Rolled Carbon Steel, Drawing Quality, and Special Killed; Replaced by A 619, A 620

A 366/A366M–91(1993)$^{\epsilon 1}$ Specification for Steel, Sheet, Carbon, Cold-Rolled, Commercial Quality, **01.03**

A 367–60(1994) Test Methods of Chill Testing of Cast Iron, **01.02**

A 368–92 Specification for Stainless and Heat-Resisting Steel Wire Strand, **01.03**
A 369/A369M–92 Specification for Carbon and Ferritic Alloy Steel Forged and Bored Pipe for High-Temperature Service, **01.01**
A 370–94 Test Methods and Definitions for Mechanical Testing of Steel Products, **01.01, 01.02, 01.03, 01.04, 01.05**
A 371 Discontinued 1969: Specification for Corrosion-Resisting Chromium and Chromium-Nickel Steel Welding Rods and Bare Electrodes
A 372/A372M–94 Specification for Carbon and Alloy Steel Forgings for Thin-Walled Pressure Vessels, **01.05**
A 373 Discontinued 1966: Specification for Structural Steel for Welding; Combined with A 36
A 374 Discontinued 1971: Specification for High-Strength Low-Alloy Cold-Rolled Steel Sheets and Strip; Replaced by A 606, A 607
A 375 Discontinued 1971: Specification for High-Strength Low-Alloy Hot-Rolled Steel Sheets and Strip; Replaced by A 606, A 607
A 376/A376M–92$^{\epsilon 1}$ Specification for Seamless Austenitic Steel Pipe for High-Temperature Central-Station Service, **01.01**
A 377–94 Index of Specifications for Ductile-Iron Pressure Pipe, **01.02**
A 378 Discontinued 1955: Specification for Flat-Rolled Electrical Steel; Replaced by A 345
A 379 Discontinued 1955: Specification for Flat-Rolled Electrical Steel; Replaced by A 345
A 380–94 Practice for Cleaning and Descaling Stainless Steel Parts, Equipment, and Systems, **01.03**
A 381–93 Specification for Metal-Arc-Welded Steel Pipe for Use with High-Pressure Transmission Systems, **01.01**
A 382 Discontinued 1971: Specification for Cold-Drawn Wrought Iron Heat-Exchanger and Condenser Tubes
A 383–87 Specification for Axles, Railway, Carbon Steel, Untreated for Export and General Industrial Use, **01.04**
A 384–76(1991) Practice for Safeguarding Against Warpage and Distortion During Hot-Dip Galvanizing of Steel Assemblies, **01.06**
A 385–80(1991) Practice for Providing High-Quality Zinc Coatings (Hot-Dip), **01.06**
A 386 Discontinued 1984: Specification for Zinc Coating (Hot-Dip) on Assembled Steel Products; Replaced by A 123
A 387/A387M–92 Specification for Pressure Vessel Plates, Alloy Steel, Chromium-Molybdenum, **01.04**
A 388/A388M–94 Practice for Ultrasonic Examination of Heavy Steel Forgings, **01.05**
A 389/A389M–93 Specification for Steel Castings, Alloy, Specially Heat-Treated for Pressure-Containing Parts, Suitable for High-Temperature Service, **01.02**
A 390–92a Specification for Zinc-Coated (Galvanized) Steel Poultry Fence Fabric (Hexagonal and Straight Line), **01.06**
A 391/A391M–93 Specification for Alloy Steel Chain, **01.05**
A 392–91b$^{\epsilon 1}$ Specification for Zinc-Coated Steel Chain-Link Fence Fabric, **01.06**
A 393 Discontinued 1974: Recommended Practice for Conducting Acidified Copper Sulfate Test for Intergranular Attack in Austenitic Stainless Steel; Replaced by A 262
A 394–93 Specification for Steel Transmission Tower Bolts, Zinc-Coated and Bare, **15.08**
A 395–88(1993) Specification for Ferritic Ductile Iron Pressure-Retaining Castings for Use at Elevated Temperatures, **01.02**
A 395M–88(1993)$^{\epsilon 1}$ Specification for Ferritic Ductile Iron Pressure-Retaining Castings for Use at Elevated Temperatures (Metric), **01.02**
A 396 Discontinued 1965: Specification for High-Strength Ductile Iron Castings; Replaced by A 536
A 397 Discontinued 1958: Specification for High Tensile Strength Carbon-Manganeses Steel Plates for Unfired Pressure Vessels
A 398 Discontinued 1969: Specification for Welding Rods and Covered Electrodes for Welding Cast Iron
A 399 Discontinued 1969: Specification for Surfacing Welding Rods and Electrodes
A 400–69(1988) Practice for Steel Bars, Selection Guide, Composition, and Mechanical Properties, **01.05**
A 401/A401M–93a Specification for Steel Wire, Chromium-Silicon Alloy, **01.03**
A 402 Discontinued 1958: Specification for Forged or Rolled Alloy Steel Pipe Flanges, Forged Fittings, and Valves and Parts Specially Heat Treated for High-Temperature Service
A 403/A403M–94a Specification for Wrought Austenitic Stainless Steel Piping Fittings, **01.01**
A 404 Discontinued
A 405–91 Specification for Seamless Ferritic Alloy-Steel Pipe Specially Heat Treated for High-Temperature Service, **01.01**
A 406 Discontinued 1965: Specification for High-Strength Structural Alloy Rivet Steel
A 407–93 Specification for Steel Wire, Cold-Drawn, for Coiled-Type Springs, **01.03**
A 407M Discontinued 1989: Specification for Steel Wire, Cold-Drawn, for Coiled-Type Springs [Metric]
A 408 Discontinued 1968: Specification for Special Large Size Deformed Billet-Steel Bars for Concrete Reinforcement; Replaced by A 615
A 409/A409M–92 Specification for Welded Large Diameter Austenitic Steel Pipe for Corrosive or High-Temperature Service, **01.01**
A 410 Discontinued 1976: Specification for Pressure Vessel Plates, Alloy Steel, Chromium-Copper-Nickel-Aluminum
A 411–86(1991)$^{\epsilon 1}$ Specification for Zinc-Coated (Galvanized) Low-Carbon Steel Armor Wire, **01.06**
A 412 Discontinued 1989: Specification for Stainless and Heat-Resisting Chromium-Nickel-Manganese Steel Plate, Sheet, and Strip
A 413/A413M–93 Specification for Carbon Steel Chain, **01.05**
A 414/A414M–92(1993)$^{\epsilon 1}$ Specification for Steel, Sheet, Carbon, for Pressure Vessels, **01.03**
A 415 Discontinued 1970: Specification for Hot-Rolled Carbon Steel Sheets, Commercial Quality; Replaced by A 569
A 416/A416M–94 Specification for Steel Strand, Uncoated Seven-Wire for Prestressed Concrete, **01.04**
A 417–93 Specification for Steel Wire, Cold-Drawn, for Zig-Zag, Square-Formed, and Sinuous-Type Upholstery Spring Units, **01.03**
A 417M Discontinued 1989: Specification for Steel Wire, Cold-Drawn, for Zig-Zag Square-Formed, and Sinuous-Type Upholstery Spring Units [Metric]
A 418–94 Test Method for Ultrasonic Examination of Turbine and Generator Steel Rotor Forgings, **01.05**
A 419 Discontinued 1971: Specification for Electric-Fusion (Arc)- Welded Wrought Iron Plate pipe
A 420/A420M–94a Specification for Piping Fittings of Wrought Carbon-Steel and Alloy Steel for Low-Temperature Service, **01.01**
A 421–91 Specification for Uncoated Stress-Relieved Steel Wire for Prestressed Concrete, **01.04**
A 422 Discontinued 1994; Specification for Butt Welds in Still Tubes for Refinery Service
A 423/A423M–91 Specification for Seamless and Electric-Welded Low-Alloy Steel Tubes, **01.01**
A 424–92 Specification for Steel, Sheet, for Porcelain Enameling, **01.03**
A 425 Discontinued 1970: Specification for Hot-Rolled Carbon Steel Strip, Commercial Quality; Replaced by A 569
A 426–91 Specification for Centrifugally Cast Ferritic Alloy Steel Pipe for High-Temperature Service, **01.01**
A 427–74(1992) Specification for Wrought Alloy Steel Rolls for Cold and Hot Reduction, **01.05**
A 428–89$^{\epsilon 1}$ Test Method for Weight of Coating on Aluminum-Coated Iron or Steel Articles, **01.06**
A 429 Discontinued 1976: Specification for Hot- and Cold-Finished Bars of Stainless and Heat-Resisting Chromium-Nickel-Manganese Steel; Replaced by A 276
A 430/A430M–91 Specification for Austenitic Steel Forged and Bored Pipe for High-Temperature Service, **01.01**
A 431 Discontinued 1968: Specification for High-Strength Deformed Billet-Steel Bars for Concrete Reinforcement with 75,000 psi Minimum Yield Strength; Replaced by A 615
A 432 Discontinued 1968: Specification for Deformed Billet Steel Bars for Concrete Reinforcement with 60,000 psi Minimum Yield Point; Replaced by At615]
A 433 Discontinued 1972: Specification for Leaded, Carbon Steel Plates for Pressure Vessels
A 434–90a Specification for Steel Bars, Alloy, Hot-Wrought or Cold-Finished, Quenched and Tempered, **01.05**
A 435/A435M–90 Specification for Straight-Beam Ultrasonic Examination of Steel Plates, **01.04**
A 436–84(1992) Specification for Austenitic Gray Iron Castings, **01.02**
A 437/A437M–94 Specification for Alloy-Steel Turbine-Type Bolting Material Specially Heat Treated for High-Temperature Service, **01.01, 15.08**
A 438–80(1991)$^{\epsilon 1}$ Test Method for Transverse Testing of Gray Cast Iron, **01.02**
A 439–83(1994)$^{\epsilon 1}$ Specification for Austenitic Ductile Iron Castings, **01.02**
A 440 Discontinued 1979: Specification for High-Strength Structural Steel
A 441/A441M Discontinued 1989: Specification for High-Strength Low-Alloy Structural Manganese Vanadium Steel; Replaced by At572/At572M
A 442/A442M Discontinued 1991: Specification for Pressure Vessel Plates, Carbon Steel, Improved Transition Properties
A 443 Discontinued 1966: Method of Notch Toughness of Turbine and Generator Steel Forgings; Combined with A 370
A 444/A444M–89$^{\epsilon 1}$ Specification for Steel Sheet, Zinc-Coated (Galvanized) by the Hot-Dip Process for Storm Sewer and Drainage Pipe, **01.06**
A 445 Discontinued 1974: Specification for Ferritic Iron Castings for Valves, Flanges, Pipe Fittings, and Other Piping Components; Replaced by A 395
A 446/A446M Discontinued 1994; Specification for Steel Sheet, Zinc-Coated (Galvanized) by the Hot-Dip Process, Structural (Physical) Quality; Replaced by A 653/A 653M
A 447/A447M–93 Specification for Steel Castings, Chromium-Nickel-Iron Alloy (25-12 Class), for High-Temperature Service, **01.02**
A 448 Discontinued 1976: Specification for Nickel-Chromium-Iron Alloy Castings (35-15 Class) for High-Temperature Service
A 449–93 Specification for Quenched and Tempered Steel Bolts and Studs, **15.08**
A 450/A450M–94 Specification for General Requirements for Carbon, Ferritic Alloy, and Austenitic Alloy Steel Tubes, **01.01**
A 451–92 Specification for Centrifugally Cast Austenitic Steel Pipe for High-Temperature Service, **01.01**
A 452–88 Specification for Centrifugally Cast Austenitic Steel Cold-Wrought Pipe for High-Temperature Service, **01.01**
A 453/A453M–94 Specification for Bolting Materials, High-Temperature, 50 to 120 ksi [345 to 827 MPa] Yield Strength, With Expansion Coefficients Comparable to Austenitic Steels, **01.01, 15.08**
A 454 Discontinued 1980: Specification for Steel Conveyor Chain

D 733 Redesignated F 39
D 734 Discontinued 1963; Specification for Insulated Wire and Cable: Vinly Chloride Plastic Insulating Compound; Replaced by D 2219, D 2220
D 735 Discontinued 1968; Specification for Elastomer Compounds for Automotive Applications; Replaced by D 2000
D 736 Discontinued 1966; Method of Test for Low-Temperature Brittleness of Rubber and Rubber-Like Materials
D 737 Discontinued 1995; Test Method for Air Permeability of Textile Fabrics
D 738 Discontinued 1972; Methods of Testing and Tolerances for Rope Made from Bast and Leaf Fibers
D 739 Discontinued 1972; Methods of Testing and Tolerances for Spun, Twisted, or Braided Products Made from Flax, Hemp, Ramie or Mixtures Thereof
D 740–94 Specification for Methyl Ethyl Ketone, **06.04**
D 741 Discontinued 1972; Methods of Measuring Dimensions of Rigid Rods Used in Electrical Insulation; Replaced by D 668
D 742 Discontinued 1956; Specification for Nonrigid Vinyl Chloride-Acetate Resin Plastics
D 743 Discontinued 1948; Specification for Nonrigid Ethyl Cellulose Plastics
D 744 Discontinued 1956; Specification for Nonrigid Vinyl Chloride Plastics
D 745 Discontinued 1950; Specification for Nonrigid Vinyl Butyral Plastics
D 746–79(1987) Test Method for Brittleness Temperature of Plastics and Elastomers by Impact, **08.01**
D 747–93 Test Method for Apparent Bending Modulus of Plastics by Means of a Cantilever Beam, **08.01**
D 748–71(1994)$^{\epsilon 1}$ Specification for Natural Block Mica and Mica Films Suitable for Use in Fixed Mica-Dielectric Capacitors, **10.01**
D 749 Discontinued 1976; Method of Calibrating a Light Source Used for Accelerating the Deterioration of Rubber
D 750–95 Test Method for Rubber Deterioration in Carbon—Arc Weathering Apparatus, **09.01**
D 751–95 Test Methods for Coated Fabrics, **09.02**
D 752 Discontinued 1984; Specification for Heavy-Duty Block Polychloroprene Jacket for Wire and Cable; Replaced by D 4247
D 753 Discontinued 1984; Specification for General Purpose Polychloroprene Jacket for Wire and Cable; Replaced by D 4247
D 754 Discontinued 1984; Specification for Synthetic Rubber Insulation for Wire and Cable, 75°C Operation
D 755 Discontinued 1984; Specification for Synthetic Rubber Insulation for Wire and Cable, 60°C Operation
D 756–93 Practice for Determination of Weight and Shape Changes of Plastics Under Accelerated Service Conditions, **08.01**
D 757 Discontinued 1966; Method of Test for Incandescence Resistance of Rigid Plastics in a Horizontal Position
D 758 Discontinued 1969; Method of Test for Impact Resistance of Plastics at Subnormal and Supernormal Temperatures
D 759 Discontinued 1982; Practice for Conducting Physical Property Tests of Plastics at Subnormal and Supernormal Temperatures
D 760 Discontinued 1952; Specification for Enclosures and Servicing Units for Tests Above and Below Room Temperatures
D 761 Discontinued 1952; Specification for Enclosures and Servicing Units for Tests Above and Below Room Temperatures
D 762 Discontinued 1965; Method of Test for Hot Extraction of Asphaltic Materials and Recovery of Bitumen by the Modified Abson Procedure; Replaced by D 1856
D 763–81(1988)$^{\epsilon 1}$ Specification for Raw and Burnt Umber Pigments, **06.03**
D 764 Discontinued 1948; Specification for Raw Burnt Umber; Combined with D 763
D 765–87(1991)$^{\epsilon 1}$ Specification for Raw and Burnt Sienna Pigments, **06.03**
D 766 Discontinued 1948; Specification for Raw Burnt Sienna; Combined with D 765
D 767 Discontinued 1976; Specification for Venetion Red
D 768–81(1987)$^{\epsilon 1}$ Specification for Yellow Iron Oxide Hydrated, **06.03**
D 769–87(1991)$^{\epsilon 1}$ Specification for Black Synthetic Iron Oxide, **06.03**
D 770–90 Specification for Isopropyl Alcohol, **06.04**
D 771 Discontinued 1955; Method of Test for Daylight 45 degree, 0 degree Luminus Directional Reflectance of Paint Finishes
D 772–86(1993) Test Method for Evaluating Degree of Flaking (Scaling) of Exterior Paints, **06.01**
D 773 Discontinued 1982; Method of Test for Adhesiveness of Gummed Tape
D 774–92a Test Method for Bursting Strength of Paper, **15.09**
D 775 Discontinued 1993; Method of Drop Test for Loaded Boxes; Replaced by D 5276
D 776–92 Test Method for Determination of Effect of Dry Heat on Properties of Paper and Board, **15.09**
D 777–93 Test Methods for Flammability of Treated Paper and Paperboard, **15.09**
D 778–93 Test Methods for Hydrogen Ion Concentration (pH) of Paper Extracts (Hot-Extraction and Cold-Extraction Procedures), **15.09**
D 779–94 Test Method for Water Resistance of Paper, Paperboard, and Other Sheet Materials by the Dry Indicator Method, **15.09**
D 780–95 Test Method for Printing Ink Permeation of Paper (Castor Oil Test), **15.09**
D 781 Discontinued 1984; Method of Test for Puncture and Stiffness of Paperboard, Corrugated and Solid Fiberboard
D 782–82(1993)$^{\epsilon 1}$ Test Method for Shipping Containers in Revolving Hexagonal Drum, **15.09**
D 783 Discontinued 1948; Tentative Method of Test for Water-Vapor Permeability of Paper and Paperboard; Replaced by E 96
D 784–95 Specification for Orange Shellac and Other Indian Lacs for Electrical Insulation, **10.01**
D 785–93 Test Method for Rockwell Hardness of Plastics and Electrical Insulating Materials, **08.01**
D 786 Discontinued 1982; Specification for Cellulose Acetate Plastic Sheets
D 787–81(1988)$^{\epsilon 1}$ Specification for Ethyl Cellulose Molding and Extrusion Compounds, **08.01**
D 788–93 Classification System for Poly(Methyl Methacrylate) (PMMA) Molding and Extrusion Compounds, **08.01**
D 789–94 Test Methods for Determination of Relative Viscosity, Melting Point, and Moisture Content of Polyamide (PA), **08.01**
D 790–92 Test Methods for Flexural Properties of Unreinforced and Reinforced Plastics and Electrical Insulating Materials, **08.01**
D 790M–92 Test Methods for Flexural Properties of Unreinforced and Reinforced Plastics and Electrical Insulating Materials [Metric], **08.01**
D 791 Discontinued 1967; Method of Test for Luminous Reflectance, Transmittance, and Color of Materials; Replaced by E 308
D 792–91 Test Methods for Density and Specific Gravity (Relative Density) of Plastics by Displacement, **08.01**
D 793 Discontinued 1982; Method of Test for Short-Time Stability at Elevated Temperatures of Plastics conCaining Chlorine
D 794–93 Practice for Determining Permanent Effect of Heat on Plastics, **08.01**
D 795 Discontinued 1971; Recommended Practice for Accelerated Weathering of Plastics Using S-1 Mercury Arc Lamp
D 796 Discontinued 1992; Practice for Compression Molding Test Specimens of Phenolic Molding Compounds; Replaced by D 5224
D 797 Discontinued 1994; Test Methods for Rubber Property—Young's Modulus at Normal and Subnormal Temperatures
D 798 Discontinued 1949; Specification and Methods of Test for Sponge and Expanded Cellular Rubber Products; Replaced by D[1]0559, D 1056
D 799–74(1995) Specification for Liquid Toilet Soap, **15.04**
D 800–91 Test Methods of Chemical Analysis of Industrial Metal Cleaning Compositions, **15.04**
D 801–92 Test Methods for Sampling and Testing Dipentene, **06.03**
D 802–92 Test Methods for Sampling and Testing Pine Oil, **06.03**
D 803–93 Test Methods for Testing Tall Oil, **06.03**
D 804–92 Terminology Relating to Naval Stores, Including Tall Oil and Related Products, **06.03**
D 805 Discontinued 1976; Methods of Testing Veneer, Plywood, and Other Glued Veneer Constructions; Replaced by D 3499, D 3500, D 3501
D 806–89 Test Method for Cement Content of Soil-Cement Mixtures, **04.08**
D 807–82(1990)$^{\epsilon 1}$ Test Method for Assessing the Tendency of Industrial Boiler Waters to Cause Embrittlement (USBM Enbrittlement Detector Method), **11.01**
D 808–91 Test Method for Chlorine in New and Used Petroleum Products (Bomb Method), **05.01**
D 809 Discontinued 1952; Method of Test for Phosphorous in Lubricating Oils, Lubricating Oil Additives and Their Concentrates; Replaced by D 1091
D 810 Discontinued 1963; Methods of Test for Sulfated Residue, Lead, Iron and Copper in Lubricating Oils
D 811 Discontinued 1989; Method for Chemical Analysis for Metals in New and Used Lubricating Oils
D 812 Discontinued 1948; Specification for GR-S (Synthetic Rubber) Sheath Compound for Electrical Insulated Cords and Cables Where Extreme Abrasion Resistance Is Not Required
D 813–95 Test Method for Rubber Deterioration—Crack Growth, **09.01**
D 814–95 Test Method for Rubber Property—Vapor Transmission of Volatile Liquids, **09.01**
D 815 Discontinued 1989; Method of Testing Coated Fabrics—Hydrogen Permeanance
D 816–82(1993)$^{\epsilon 1}$ Methods of Testing Rubber Cements, **09.01**
D 817–91 Test Methods of Testing Cellulose Acetate Propionate and Cellulose Acetate Butyrate, **06.03**
D 818 Discontinued 1953; Specification for Natural Rubber Cups for Use in Hydraulic Actuating Cylinders
D 819 Discontinued 1959; Specification for Cast Allyl Plastic Sheets, Rods, Tubes, and Shapes
D 820–93 Test Methods for Chemical Analysis of Soaps Containing Synthetic Detergents, **15.04**
D 821 Discontinued 1984; Method of Evaluating Degree of Abrasion, Erosion, or a Combination of Both in Road Service Test of Traffic Paints
D 822–89 Practice for Conducting Tests on Paint and Related Coatings and Materials using Filtered Open-Flame Carbon-Arc Light and Water Exposure Apparatus, **06.01**
D 823–92a Practices for Producing Films of Uniform Thickness of Paint, Varnish, and Related Products on Test Panels, **06.01**
D 824–94 Test Method for Rate of Absorption of Water by Bibulous Papers, **15.09**
D 825 Discontinued 1973; Methods of Test for Ply Adhesion of Paper
D 826 Discontinued 1985; Methods of Test for Degree of Wet Curl of Paper
D 827 Discontinued 1981; Method of Test for Edge Tearing Strength of Paper
D 828–93 Test Method for Tensile Properties of Paper and Paperboard Using Constant-Rate-of-Elongation Apparatus, **15.09**
D 829–93 Test Method for Wet Tensile Breaking Strength of Paper and Paper Products, **15.09**
D 830 Discontinued 1948; Method of Test for Water Vapor Permeability of Paper and Paperboard; Replaced by E 96
D 831–94 Test Method for Gas Content of Cable and Capacitor Oils, **10.03**

D 2523–78(1989)$^{\epsilon 1}$ Practice for Testing Load-Strain Properties of Roofing Membranes, **04.04**
D 2524–95 Test Method for Breaking Tenacity of Wool Fibers, Flat Bundle Method—⅛-in. (3.2-mm) Gage Length, **07.01**
D 2525–90(1995) Practice for Sampling Wool for Moisture, **07.01**
D 2526–90 Specification for Ozone-Resisting Silicone Rubber Insulation for Wire and Cable, **10.02**
D 2527–83(1992) Specification for Rubber Seals—Splice Strength, **09.02**
D 2528 Discontinued 1975; Method of Test for Dirt in Casein and Isolated Soy Protein
D 2529 Discontinued 1985; Method of Test for Bursting Strength of Paperboard and Linerboard
D 2530 Discontinued 1989; Specification for Nonoriented Polypylene Plastic Film
D 2531 Discontinued 1980; Specification for Phenoxy Plastics Molding and Extrusion Materials
D 2532–93 Test Method for Viscosity and Viscosity Change After Standing at Low Temperature of Aircraft Tubrine Lubricants, **05.01**
D 2533–93a Test Method for Vapor-Liquid Ratio of Spark-Ignition Engine Fuels, **05.01**
D 2534–88(1993)$^{\epsilon 1}$ Test Method for Coefficient of Kinetic Friction for Wax Coatings, **05.01**
D 2535 Redesignated F 304
D 2536 Redesignated F 305
D 2537 Redesignated F 306
D 2538–94 Practice for Fusion of Poly(Vinyl Chloride) (PVC) Resins Using a Torque Rheometer, **08.02**
D 2539–93 Test Method for Shock Sensitivity of Liquid Monopropellants by the Card-Gap Test, **15.03**
D 2540–93 Test Method for Drop-Weight Sensitivity of Liquid Monopropellants, **15.03**
D 2541–93 Test Method for Critical Diameter and Detonation Velocity of Liquid Monopropellants, **15.03**
D 2542 Redesignated F 309
D 2543 Redesignated F 310
D 2544 Redesignated F 307
D 2545 Redesignated F 308
D 2546 Redesignated F 315
D 2547 Discontinued 1991; Test Method for Lead in Gasoline
D 2548 Discontinued 1979; Method of Test for Analysis of Oil Soluble Petroleum Sulfonates by Liquid Chromatography; Replaced by D 3712
D 2549–91 Test Method for Separation of Representative Aromatics and Nonaromatics Fractions of High-Boiling Oils by Elution Chromatography, **05.01**
D 2550 Discontinued 1991; Test Method for Water Separation Characteristics of Aviation Turbine Fuels
D 2551 Discontinued 1989; Test Method for Vapor Pressure of Petroleum Products
D 2552 Discontinued 1987; Method of Test for Environmental Stress Rupture of Type III Polyethylenes Under Constant Tensile Load
D 2553 Discontinued 1992; Test Method for Detecting Odor of Drycleaning Detergent on a Drycleaned Garment
D 2554 Discontinued 1992; Test Method for Flash Point of Drycleaning Detergents in the Drycleaning Bath
D 2555–88$^{\epsilon 1}$ Test Methods for Establishing Clear Wood Strength Values, **04.10**
D 2556–93a Test Method for Apparent Viscosity of Adhesives Having Shear-Rate-Dependent Flow Properties, **15.06**
D 2557–93 Test Method for Tensile-Shear Strength of Adhesives in the Subzero Temperature Range from −267.8 to −55°C (−450 to −67°F), **15.06**
D 2558 Discontinued 1992; Test Method for Evaluating Peel Strength of Shoe Sole-Attaching Adhesives
D 2559–92 Specification for Adhesives for Structural Laminated Wood Products for Use Under Exterior (Wet Use) Exposure Conditions, **15.06**
D 2560 Discontinued 1987; Specification for Solvent Cements for Cellulose Acetate Butyrate (CAB) Plastic Pipe, Tubing, and Fittings
D 2561–91 Test Method for Environmental Stress-Crack Resistance of Blow-Molded Polyethylene Containers, **08.02**
D 2562–94 Practice for Classifying Visual Defects in Parts Molded from Reinforced Thermosetting Plastics, **08.02**
D 2563–94 Practice for Classifying Visual Defects in Glass-Reinforced Plastic Laminate Parts, **08.02**
D 2564–93 Specification for Solvent Cements for Poly(Vinyl Chloride) (PVC) Plastic Piping Systems, **08.04**
D 2565–92a Practice for Operating Xenon Arc-Type Light-Exposure Apparatus With and Without Water for Exposure of Plastics, **08.02**
D 2566 Discontinued 1993; Test Method for Linear Shrinkage of Cured Thermosetting Casting Resins During Cure
D 2567 Discontinued 1984; Molecular Distribution Analysis for Monoalkylbenzenes by Mass Spectrometry
D 2568 Discontinued 1980; Recommended Practice for Calculation of Absorbed Dose from Gamma Radiation; Replaced by E 665
D 2569–91 Test Method for Distillation of Pitch, **04.04**
D 2570–94 Test Method for Simulated Service Corrosion Testing of Engine Coolants, **15.05**
D 2571–88 Guide for Testing Wood Furniture Lacquers, **06.02**
D 2572–91 Test Method for Isocyanate Groups in Urethane Materials or Prepolymers, **06.03**
D 2573–94 Test Method for Field Vane Shear Test in Cohesive Soil, **04.08**
D 2574–94 Test Method for Resistance of Emulsion Paints in the Container to Attack by Microorganisms, **06.01**
D 2575–70(1991)$^{\epsilon 1}$ Method for Testing Polymerized Fatty Acids, **06.03**
D 2576 Discontinued 1981; Method of Test for Metals in Water and Waste Water by Atomic Absorption Spectrophotometry
D 2577 Discontinued 1989; Test Method for Radioactive Cesium in Water
D 2578–94 Test Method for Wetting Tension of Polyethylene and Polypropylene Films, **08.02**
D 2579–93 Test Methods for Total and Organic Carbon in Water, **11.02**
D 2580–94 Test Method for Phenols in Water by Gas-Liquid Chromatography, **11.02**
D 2581–80(1987)$^{\epsilon 1}$ Specification for Polybutylene (PB) Plastics Molding and Extrusion Materials, **08.02, 08.04**
D 2582–93 Test Method for Puncture-Propagation Tear Resistance of Plastic Film and Thin Sheeting, **08.02**
D 2583–93 Test Method for Indentation Hardness of Rigid Plastics by Means of a Barcol Impressor, **08.02**
D 2584–94 Test Method for Ignition Loss of Cured Reinforced Resins, **08.02**
D 2585–68(1990)$^{\epsilon 1}$ Test Method for Preparation and Tension Testing of Filament-Wound Pressure Vessels, **15.03**
D 2586–68(1990)$^{\epsilon 1}$ Test Method for Hydrostatic Compressive Strength of Glass-Reinforced Plastic Cylinders, **15.03**
D 2587 Discontinued 1990; Test Method for Acetone Extraction and Ignition of Glass Fiber Strands
D 2588 Discontinued 1972; Method of Test for Standard Plate Count of Casein and Isolated Soy Protein
D 2589–88(1993)$^{\epsilon 1}$ Test Method for McNett Wet Classification of Asbestos Fiber, **04.05**
D 2590–91 Test Method for Sampling Chrysotile Asbestos, **04.05**
D 2591 Discontinued 1980; Method of Test for Linear Density of Elastomeric Yarn
D 2592 Discontinued 1972; Method of Test for Sieve Analysis of Casein and Isolated Soy Protein
D 2593–93 Test Method for Butadiene Purity and Hydrocarbon Impurities by Gas Chromatography, **05.01**
D 2594–87$^{\epsilon 1}$ Test Methods for Stretch Properties of Knitted Fabrics Having Low Power, **07.01**
D 2595–70(1985) Test Method for Evaporation Loss of Lubricating Greases Over Wide Temperature Range, **05.01**
D 2596–93 Test Method for Measurement of Extreme-Pressure Properties of Lubricating Grease (Four-Ball Method), **05.01**
D 2597–94 Test Method for Analysis of Demethanized Hydrocarbon Liquid Mixtures Containing Nitrogen and Carbon Dioxide by Gas Chromatography, **05.02**
D 2598–91 Practice for Calculation of Certain Physical Properties of Liquefied Petroleum (LP) Gases from Compositional Analysis, **05.02**
D 2599 Discontinued 1993; Methods of Test for Lead in Gasoline by X-ray Spectrometry
D 2600 Discontinued 1992; Test Method for Aromatic Traces in Light Saturated Hydrocarbons by Gas Chromatography; Replaced by D 4420
D 2601 Discontinued 1985; Test Method for Hydrocarbon Types in Propylene Tetramer by Low Ionizing Voltage Mass Spectrometry
D 2602 Discontinued 1993; Apparent Viscosity of Engine Oils at Low Temperature Using the Cold-Cranking Simulator; Replaced by D 5293
D 2603–91 Test Method for Sonic Shear Stability of Polymer-Containing Oils, **05.02**
D 2604–86(1992)$^{\epsilon 1}$ Specification for High-Boiling Hydrocarbon Solvent for Preparing Oil-Borne Preservative Solutions, **04.10**
D 2605 Discontinued 1993; Specification for Volatile Petroleum Solvent (LPG) for Preparing Pentachlorophenol Solutions
D 2606–94 Test Method for Solubility of Pentachlorophenol in Heavy Hydrocarbon Solvents, **04.10**
D 2607 Discontinued 1992; Classification of Peats, Mosses, Humus, and Related Products
D 2608 Discontinued 1990; Test Method for Copper in Electrical Insulating Oils by Photometric Analysis
D 2609–93 Specification for Plastic Insert Fittings for Polyethylene (PE) Plastic Pipe, **08.04**
D 2610 Discontinued 1979; Specification for Butt Fusion Polyethylene (PE) Plastic Pipe Fittings, Schedule 40; Replaced by D 3261
D 2611 Discontinued 1979; Specification for Butt Fusion Polyethylene (PE) Plastic Pipe Fittings, Schedule 80; Replaced by D 3261
D 2612–93a Test Method for Fiber Cohesion in Sliver and Top in Static Tests, **07.01**
D 2613–85(1994)$^{\epsilon 1}$ Test Method for Calcium or Zinc in Paint Driers by EDTA Method, **06.01**
D 2614 Discontinued 1971; Method of Test for Giding Poer of Chromatic Paints; Replaced by D 2805
D 2615 Discontinued 1981; Method of Test for Free Yoluene Diisocyanate in Urethane Polymers by Distillation; Replaced by D 3432
D 2616–94 Test Method for Evaluation of Visual Color Difference with a Gray Scale, **06.01**
D 2617–69(1991)$^{\epsilon 1}$ Test Method for Total Ash in Leather, **15.04**
D 2618 Discontinued 1984; Method of Test for Pressure Blocking and Picking Points of Petroleum Wax
D 2619–88(1994)$^{\epsilon 1}$ Test Method for Hydrolytic Stability of Hydraulic Fluids (Beverage Bottle Method), **05.02**
D 2620–87 Test Method for Light Stability of Clear Coatings, **06.02**
D 2621–87 Test Method for Infrared Identification of Vehicle Solids from Solvent-Reducible Paints, **06.01**

D 4237–90 Test Methods for Rubber Hose Used for Steam Applications, **09.02**
D 4238–90 Test Method for Electrostatic Propensity of Textiles, **07.02**
D 4239–94 Test Method for Sulfur in the Analysis Sample of Coal and Coke Using High Temperature Tube Furnace Combustion Methods, **05.05**
D 4240–83(1989)$^{\epsilon 1}$ Test Method for Airborne Asbestos Concentration in Workplace Atmosphere, **11.03**
D 4241–92 Practice for Design of Gas Turbine Generator Lubricating Oil Systems, **05.02**
D 4242–91 Test Method for Glass Plate Flow for Thermosetting Coating Powders, **10.02**
D 4243–86(1993)$^{\epsilon 1}$ Method for Measurement of Average Viscometric Degree of Polymerization of New and Aged Electrical Papers and Boards, **10.02**
D 4244–95 Specification for General-Purpose, Heavy-Duty, and Extra-Heavy Duty Acrylonitrile-Butadiene/Polyvinyl Chloride (NBR/PVC) Jackets for Wire and Cable, **10.02**
D 4245–89 Specification for Ozone-Resistant Thermoplastic Elastomer Insulation for Wire and Cable, 90°C Dry—75°C Wet Operation, **10.02**
D 4246–89 Specification for Ozone-Resistant Thermoplastic Elastomer Insulation for Wire and Cable, 90°C Operation, **10.02**
D 4247–95 Specification for General-Purpose Black Heavy-Duty and Black Extra-Heavy Duty Polychloroprene Jackets for Wire and Cable, **10.02**
D 4248–92 Practice for Design of Steam Turbine Generator Oil Systems, **05.02**
D 4249–83(1992)$^{\epsilon 1}$ Test Method for Enumeration of *Candida Albicans* in Water, **11.02**
D 4250–92 Test Method for Water-Holding Capacity of Bibulous Fibrous Products, **15.09**
D 4251–89(1995)$^{\epsilon 1}$ Test Method for Active Matter in Anionic Surfactants by Potentiometric Titration, **15.04**
D 4252–89(1995)$^{\epsilon 1}$ Test Methods for Chemical Analysis of Alcohol Ethoxylates and Alkylphenol Ethoxylates, **15.04**
D 4253–93 Test Methods for Maximum Index Density and Unit Weight of Soils Using a Vibratory Table, **04.08**
D 4254–91 Test Method for Minimum Index Density and Unit Weight of Soils and Calculation of Relative Density **04.08**
D 4255/D4255M–83(1994)$^{\epsilon 1}$ Guide for Testing In-Plane Shear Properties of Composite Laminates, **15.03**
D 4256–89(1994)$^{\epsilon 1}$ Test Method for Determination of the Decontaminability of Coatings Used in Light-Water Nuclear Power Plants, **06.02**
D 4257 Discontinued 1990; Practice for Design and Use of Safety Alert System for Hazardous Work Locations in the Coatings and Lining Industry
D 4258–83(1992) Practice for Surface Cleaning Concrete for Coating, **06.02**
D 4259–88(1992) Practice for Abrading Concrete, **06.02**
D 4260–88(1992) Practice for Acid Etching Concrete, **06.02**
D 4261–83(1993)$^{\epsilon 1}$ Practice for Surface Cleaning Concrete Unit Masonry for Coating, **06.02**
D 4262–83(1993)$^{\epsilon 1}$ Test Method for pH of Chemically Cleaned or Etched Concrete Surfaces, **06.02**
D 4263–83(1993)$^{\epsilon 1}$ Test Method for Indicating Moisture in Concrete by The Plastic Sheet Method, **06.02**
D 4264–90 Test Method for Pressure Testing of Assemblies of Rubber-Lined Fire Hose and Rubber Booster Hose in Service on Interior Standpipes, **09.02**
D 4265–83(1993) Guide for Evaluating Stain Removal Performance in Home Laundering, **15.04**
D 4266–83(1990)$^{\epsilon 1}$ Test Methods for Precoat Capacity of Powdered Ion-Exchange Resins, **11.02**
D 4267–89 Specification for Labels for Small-Volume (100 mL or Less) Parenteral Drug Containers, **15.09**
D 4268–93 Test Methods for Testing Fiber Ropes, **07.02**
D 4269 Discontinued 1992; Test Method for Shorn Pile Mass of Finished Tufted Pile Yarn Floor Covering
D 4270–95 Guide for Using Existing Practices in Developing and Writing Test Methods, **07.02**
D 4271–88(1994) Practice for Writing Statements on Sampling in Test Methods for Textiles, **07.02**
D 4272–90a Test Method for Total Energy Impact of Plastic Films by Dart Drop, **08.02**
D 4273–94 Test Method Polyurethane Raw Materials: Determination of Primary Hydroxyl Content of Polyether Polyols, **08.02**
D 4274–94 Test Method for Testing Polyurethane Raw Materials: Determination of Hydroxyl Numbers of Polyols, **08.02**
D 4275–91 Test Method for Determination of Butylated Hydroxy Toluene (BHT) in Polymers of Ethylene and Ethylene—Vinyl/Acetate (EVA) Copolymers by Gas Chromatography, **08.02**
D 4276–95 Practice for Confined Area Entry, **15.05**
D 4277–83(1993)$^{\epsilon 1}$ Guide for Testing Amino Resins, **06.03**
D 4278–88 Test Method for Wet Ashing Procedure for Preparing Wood Samples for Inorganic Chemical Analysis, **04.10**
D 4279–83(1988)$^{\epsilon 1}$ Test Methods for Water Vapor Transmission of Shipping Containers—Constant and Cycle Methods, **15.09**
D 4280–94a Specification for Extended Life Type, Nonplowable, Prismatic, Raised, Retroreflective Pavement Markers, **04.03**
D 4281–93 Test Method for Oil and Grease (Fluorocarbon Extractable Substances) by Gravimetric Determination, **11.02**
D 4282–89(1994)$^{\epsilon 1}$ Test Method for Determination of Free Cyanide in Water and Wastewater by Microdiffusion, **11.02**
D 4283–83(1993)$^{\epsilon 1}$ Test Method for Viscosity of Silicone Fluids, **15.04**
D 4284–92 Test Method for Determining Pore Volume Distribution of Catalysts by Mercury Intrusion Porosimetry, **05.03**
D 4285–83(1993)$^{\epsilon 1}$ Test Method for Indicating Oil or Water in Compressed Air, **06.02**
D 4286–90 Practice for Determining Coating Contractor Qualifications for Nuclear Powered Electric Generation Facilities, **06.02**
D 4287–94 Test Method for High-Shear Viscosity Using the ICI Cone/Plate Viscometer, **06.01**
D 4288–83(1989)$^{\epsilon 1}$ Specification for Calcium Borosilicate Pigments, **06.03**
D 4289–94 Test Method for Compatibility of Lubricating Grease with Elastomers, **05.02**
D 4290–94 Test Method for Determining the Leakage Tendencies of Automotive Wheel Bearing Grease Under Accelerated Conditions, **05.02**
D 4291–93 Test Method for Trace Ethylene Glycol in Used Engine Oil, **05.02**
D 4292–92 Test Method for Vibrated Bulk Density of Calcined Petroleum Coke, **05.02**
D 4293–83(1993) Specification for Phosphate Ester Based Fluids for Turbine Lubrication, **05.02**
D 4294–90 Test Method for Sulfur in Petroleum Products by Energy-Dispersive X-Ray Fluorescence Spectroscopy, **05.02**
D 4295–89(1994) Classification for Rubber Compounding Materials—Zinc Oxide, **09.01**
D 4296–83(1994)$^{\epsilon 1}$ Practice for Sampling Pitch, **04.04**
D 4297–89(1994) Practice for Sampling and Handling 4,4′–Isopropylidine Diphenol (Bisphenol-A), **06.04**
D 4298–95 Guide for Intercomparing Permeation Tubes to Establish Traceability, **11.03**
D 4299 Discontinued 1990; Test Methods for Effect of Bacterial Contamination on Permeance of Adhesive Preparations and Adhesives Films—Replaced by D 4300, D 4783
D 4300–93 Test Methods for Ability of Adhesive Films to Support or Resist the Growth of Fungi, **15.06**
D 4301–84(1990)$^{\epsilon 1}$ Test Method for Total Chlorine in Epoxy Resins and Compounds, **06.03**
D 4302–93 Specification for Artists' Oil, Resin-Oil, and Alkyd Paints, **06.02**
D 4303–93a Test Methods for Lightfastness of Pigments Used in Artists' Paints, **06.02**
D 4304–93 Specification for Mineral Lubricating Oil Used in Steam or Gas Turbines, **05.02**
D 4305–94 Test Method for Filter Flow of Aviation Fuels at Low Temperatures, **05.02**
D 4306–91 Practice for Aviation Fuel Sample Containers for Tests Affected by Trace Contamination, **05.02**
D 4307–94 Practice for Preparation of Liquid Blends for Use as Analytical Standards, **05.02**
D 4308–89 Test Method for Electrical Conductivity of Liquid Hydrocarbons by Precision Meter, **05.02**
D 4309–91 Practice for Sample Digestion Using Closed Vessel Microwave Heating Technique for the Determination of Total Recoverable Metals in Water, **11.01**
D 4310–94 Test Method for Determination of the Sludging and Corrosion Tendencies of Inhibited Mineral Oils, **05.02**
D 4311–83(1990) Practice for Determining Asphalt Volume Correction to a Base Temperature, **04.03**
D 4312–89 Test Method for Toluene-Insoluble (TI) Content of Tar and Pitch (Short Method), **04.04**
D 4313–93 Specification for General Purpose, Heavy-Duty, and Extra-Heavy-Duty Crosslinked Chlorinated Polyethylene Jackets for Wire and Cable, **10.02**
D 4314–95 Specification for General Purpose, Heavy-Duty, and Extra-Heavy-Duty Crosslinked Chlorosulfonated Polyethylene Jackets for Wire and Cable, **10.02**
D 4315–94 Test Methods for Rubber Compounding Material—Zinc Oxide, **09.01**
D 4316–84(1989)$^{\epsilon 1}$ Specification for Rubber Water Bottles, **09.02**
D 4317–94 Specification for Polyvinyl Acetate-Based Emulsion Adhesives, **15.06**
D 4318–93 Test Method for Liquid Limit, Plastic Limit, and Plasticity Index of Soils, **04.08**
D 4319–93 Test Method for Distribution Ratios by the Short-Term Batch Method, **04.08**
D 4320–93 Test Method for Laboratory Preparation of Chemically Grouted Soil Specimens for Obtaining Design Strength Parameters, **04.08**
D 4321–91 Test Method for Package Yield of Plastic Film, **08.02**
D 4322–83(1991)$^{\epsilon 1}$ Test Method for Residual Acrylonitrile Monomer Styrene-Acrylonitrile Copolymers and Nitrile Rubber by Headspace Gas Chromatography, **08.02**
D 4323–84(1992) Test Method for Hydrogen Sulfide in the Atmosphere by Rate of Change of Reflectance, **11.03**
D 4324–90a Test Method for Carbon Black, Pelleted-Pellet Attrition, **09.01**
D 4325–91 Test Methods for Nonmetallic Semi-Conducting and Electrically Insulating Rubber Tapes, **10.02**
D 4326–94 Test Method for Major and Minor Elements in Coal and Coke Ash by X-Ray Fluorescence, **05.05**
D 4327–91 Test Method for Anions in Water by Chemically-Suppressed Ion Chromatography, **11.01**
D 4328–84(1993)$^{\epsilon 1}$ Practice for Calculation of Supersaturation of Barium Sulfate, Strontium Sulfate, and Calcium Sulfate Dihydrate (Gypsum) in Brackish Water, Seawater, and Brines, **11.02**
D 4329–92 Practice for Operating Light and Water Apparatus (Fluorescent UV Condensation Type) for Exposure of Plastics, **08.03**

E. MISCELLANEOUS SUBJECTS

E 1–95 Specification for ASTM Thermometers, **14.03**
E 2 Discontinued 1983; Methods of Preparation of Micrographs of Metals and Alloys (Including Recommended Practice for Photography As Applied to Metallography); Replaced by E 883
E 3–95 Methods of Preparation of Metallographic Specimens, **03.01**
E 4–94 Practices for Force Verification of Testing Machines, **03.01, 04.02**
E 5 Discontinued 1937; Methods of Preparation of Metallographic Specimens; Replaced by E 3
E 6–89(1994)$^{\epsilon 1}$ Terminology Relating to Methods of Mechanical Testing, **03.01**
E 7–95 Terminology Relating to Metallography, **03.01**
E 8–95a Test Methods for Tension Testing of Metallic Materials, **03.01**
E 8M–95a Test Methods for Tension Testing of Metallic Materials [Metric], **03.01**
E 9–89a$^{\epsilon 1}$ Test Methods of Compression Testing of Metallic Materials at Room Temperature, **03.01**
E 10–93 Test Method for Brinell Hardness of Metallic Materials, **03.01**
E 11–95 Specification for Wire-Cloth Sieves for Testing Purposes, **04.02, 14.02**
E 12–70(1991)$^{\epsilon 1}$ Terminology Relating to Density and Specific Gravity of Solids, Liquids, and Gases, **15.05**
E 13 Discontinued 1967; Definitions of Terms Relating to Screen (Sieve)
E 14 Discontinued 1983; Recommended Practice for Thermal Analysis of Metals and Alloys
E 15 Discontinued 1949; Methods of Radiographic Testing of Metal Castings
E 16 Discontinued 1978; Method of Free Bend Test for Ductility of Welds
E 17 Discontinued 1939; Specification for Sieves for Testing Purposes (Wire Cloth Sieves, Bound - Hole and Square - Hole Screens or Sieves)—Replaced by E 11
E 18–94 Test Methods for Rockwell Hardness and Rockwell Superficial Hardness of Metallic Materials, **03.01**
E 19 Discontinued 1962; Classification of Austenite Grain Size in Steels; Replaced by E 112
E 20 Discontinued 1994; Practice for Particle Size Analysis of Particulate Substances in the Range of 0.2 to 75 Micrometres by Optical Microscopy
E 21–92 Test Methods for Elevated Temperature Tension Tests of Metallic Materials, **03.01**
E 22 Discontinued 1959; Recommended Practice for Conducting Long-Time High-Temperature Tension Test of Metallic Materials; Replaced by E 139
E 23–94b Test Methods for Notched Bar Impact Testing of Metallic Materials, **03.01**
E 24 Discontinued 1968; Definitions of Terms Relating to Rheological Properties of Matter
E 25 Discontinued 1950; Method of Quantitative Spectrochemical Analysis of High Grade Pig Lead
E 26 Discontinued 1954; Method of Quantitative Spectrochemical Analysis of Zinc Base Alloy and High Grade Zinc by the Solution-d-c Arc Technique
E 27 Discontinued 1986; Method for Spectrographic Analysis of Zinc and Zinc Alloys by the Solution-Residue Technique
E 28–92 Test Method for Softening Point by Ring-and-Ball Apparatus, **06.03**
E 29–93a Practice for Using Significant Digits in Test Data to Determine Conformance with Specifications, **14.02**
E 30 Discontinued 1995; Test Methods for Chemical Analysis of Steel, Cast Iron, Open-Hearth Iron, and Wrought Iron
E 31–85(1989) Methods for Chemical Analysis of Ferroalloys, **03.05**
E 32–86(1991) Practices for Sampling Ferroalloys and Steel Additives for Determination of Chemical Composition, **03.05**
E 33 Discontinued 1959; Hardness Conversion Table for Cartridge Brass (Relationship Between Diamond Pyramid Hardness, Rockwell Hardness, and Brinell Hardness); Replaced by E 140
E 34–94 Test Methods for Chemical Analysis of Aluminum and Aluminum-Base Alloys, **03.05**
E 35–88(1993)$^{\epsilon 1}$ Test Methods for Chemical Analysis of Magnesium and Magnesium Alloys, **03.05**
E 36 Discontinued 1980; Methods for Chemical Analysis of Brasses; Replaced by E 478
E 37–76(1990)$^{\epsilon 1}$ Test Methods for Chemical Analysis of Pig Lead, **03.05**
E 38 Discontinued 1989; Methods for Chemical Analysis of Nickel-Chromium and Nickel-Chromium-Iron Alloys; Replaced by E 350
E 39–84(1990)$^{\epsilon 1}$ Methods for Chemical Analysis of Nickel, **03.05**
E 40 Discontinued 1993; Test Method for Chemical Analysis of Slab Zinc (Spelter); Replaced by E 536
E 41–92 Terminology Relating to Conditioning, **14.02**
E 42 Redesignated G 23
E 43 Discontinued 1962; Recommended Practice for Identification of Crystalline Materials by the Hanawalt X-Ray Diffraction Method
E 44 Redesignated A 919
E 45–95 Test Methods for Determining the Inclusion Content of Steel, **03.01**
E 46 Discontinued 1994; Test Methods for Chemical Analysis of Lead- and Tin-Base Solder
E 47–93 Test Methods for Chemical Analysis of Zinc Die-Casting Alloys, **03.05**
E 48 Discontinued 1959; Hardness Conversion Table for Steel (Relationship Between Diamond Pyramid Hardness, Rockwell Hardness, and Brinell Hardness); Replaced by E 140
E 49 Discontinued 1950; Method of Spectrochemical Analysis of Lead Alloys for Minor Constituents and Impurities
E 50–90(1995)$^{\epsilon 1}$ Practices for Apparatus, Reagents, and Safety Precautions for Chemical Analysis of Metals, **03.05**
E 51 Discontinued 1984; Method for Spectrographic Analysis of Tin Alloys by the Powder Technique
E 52 Discontinued 1969; Industrial Radiographic Terminology for Use in Radiographic Inspection of Castings and Weldments
E 53–86a(1991) Test Methods for Chemical Analysis of Copper, **03.05**
E 54–80(1990)$^{\epsilon 1}$ Test Methods for Chemical Analysis of Special Brasses and Bronzes, **03.05**
E 55–91 Practice for Sampling Wrought Nonferrous Metals and Alloys for Determination of Chemical Composition, **03.05**
E 56 Discontinued 1994; Test Method for Chemical Analysis of Silver Brazing Alloys
E 57 Discontinued 1987; Methods for Chemical Analysis of White Metal Bearing Alloys
E 58 Discontinued 1951; Tentative Photometric Method for Determination of Bismuth in Pig Lead; Combined with E 37
E 59–93 Practice for Sampling Steel and Iron for Determination of Chemical Composition, **03.05**
E 60–93 Practice for Photometric and Spectrophotometric Methods for Chemical Analysis of Metals, **03.05**
E 61 Redesignated E 35
E 62–89 Test Methods for Chemical Analysis of Copper and Copper Alloys (Photometric Methods), **03.05**
E 63 Discontinued 1951; Tentative Photometric Method for Chemical Analysis of Copper-Nickel and Copper-Nickel-Zinc Alloys; Combined with E 75
E 64 Discontinued 1957; Photometric Methods for Determination of Iron in Slab Zinc (Spelter); Combined with E 40
E 65 Discontinued 1951; Method of Sampling Slab Zinc (Spelter)
E 66 Discontinued 1948; Method for Sampling Molybdenum Salts and Compounds for Metallurgical Use; Combined with A 146
E 67 Discontinued 1951; Tentative Photometric Method for Chemical Analysis of Lead, Tin, Antimony and Their Alloys
E 68 Discontinued 1980; Method for Polarographic Determination of Lead and Cadmium in Zinc
E 69–95 Test Method for Combustible Properties of Treated Wood by the Fire-Tube Apparatus, **04.10**
E 70–90 Test Method for pH of Aqueous Solutions With the Glass Electrode, **15.05**
E 71 Discontinued 1974; Reference Radiographs for Steel Castings up to 2 in. in Thickness; Replaced by E 446
E 72–95 Methods of Conducting Strength Tests of Panels for Building Construction, **04.07**
E 73–83(1991) Practice for Static Load Testing of Truss Assemblies, **04.07**
E 74–91 Practice of Calibration of Force Measuring Instruments for Verifying the Load Indication of Testing Machines, **03.01**
E 75–76(1990)$^{\epsilon 1}$ Test Methods for Chemical Analysis of Copper-Nickel and Copper-Nickel-Zinc Alloys, **03.05**
E 76–88(1993)$^{\epsilon 1}$ Test Methods for Chemical Analysis of Nickel-Copper Alloys, **03.05**
E 77–92 Test Method for the Inspection and Verification of Thermometers, **14.03**
E 78 Discontinued 1953; Method of Compression Testing of Metallic Materials; Combined with E 9
E 79 Discontinued 1964; Methods for Estimating the Average Grain Size of Wrought Copper and Copper-Base Alloys; Replaced by E 112
E 80 Discontinued 1986; Recommended Practice for Dilatometric Analysis of Metallic Materials; Replaced by E 228
E 81–90 Test Method for Preparing Quantitative Pole Figures of Metals, **03.01**
E 82–91 Test Method for Determining the Orientation of a Metal Crystal, **03.01**
E 83–94 Practice for Verification and Classification of Extensometers, **03.01**
E 84–95 Test Method for Surface Burning Characteristics of Building Materials, **04.07**
E 85 Discontinued 1959; Recommended Practice for Conducting Time-for-Rupture-Tension Tests of Metallic Materials; Replaced by E 139
E 86 Discontinued 1983; Methods for Chemical Analysis of Antimony
E 87 Discontinued 1984; Methods for Chemical Analysis of Lead, Tin, Antimony and Their Alloys (Photometric Method)
E 88–91 Practice for Sampling Nonferrous Metals and Alloys in Cast Form for Determination of Chemical Composition, **03.05**
E 89 Discontinued 1962; Methods for Estimating the Average Ferrite Grain Size of Low-Carbon Steels; Replaced by E 112
E 90–90 Test Method for Laboratory Measurement of Airborne Sound Transmission Loss of Building Partitions, **04.06**
E 91 Discontinued 1962; Method for Estimating the Average Grain Size of Non-Ferrous Metals, Other Than Copper, and Their Alloys; Replaced by E 112
E 92–82(1992) Test Method for Vickers Hardness of Metallic Materials, **03.01**
E 93 Discontinued 1959; Hardness Conversion Table for Nickel and High Nickel Alloys (Relationship Between Diamond Pyramid Hardness, Brinell Hardness, and Rockwell Hardness; Replaced by E 140
E 94–93 Guide for Radiographic Testing, **03.03**
E 95–68(1992) Specification for Cell-Type Oven with Controlled Rates of Ventilation, **14.02**
E 96–94 Test Methods for Water Vapor Transmission of Materials, **04.06**
E 97 Discontinued 1992; Test Method for Directional Reflectance Factor,

45-deg 0-deg, of Opaque Specimens by Broad-Band Filter Reflectometry; Replaced by E 1347

E 98 Discontinued 1965; Reference Radiographs for Inspection of Aluminum and Magnesium Castings; Replaced by E 155

E 99 Discontinued 1973; Reference Radiographs for Steel Welds; Replaced by E 390

E 100-95 Specification for ASTM Hydrometers, **14.03**

E 101-91 Test Method for Spectrographic Analysis of Aluminum and Aluminum Alloys by the Point-to-Plane Technique, **03.05**

E 102-93 Test Method for Saybolt Furol Viscosity of Bituminous Materials at High Temperatures, **04.04**

E 103-84(1989) Method for Rapid Indentation Hardness Testing of Metallic Materials, **03.01**

E 104-85(1991) Practice for Maintaining Constant Relative Humidity by Means of Aqueous Solutions, **11.03**

E 105-58(1989) Practice for Probability Sampling of Materials, **14.02**

E 106-83(1989)$^{\epsilon 1}$ Test Methods for Chemical Analysis of Copper-Beryllium Alloys, **03.05**

E 107-88(1993)$^{\epsilon 1}$ Test Methods for Chemical Analysis of Electronic Nickel, **03.05**

E 108-93 Test Methods for Fire Tests of Roof Coverings, **04.07**

E 109 Discontinued 1981; Method for Dry Powder Magnetic Particle Inspection; Replaced by E 709

E 110-82(1992) Test Method for Indentation Hardness of Metallic Materials by Portable Hardness Testers, **03.01**

E 111-82(1988)$^{\epsilon 1}$ Test Method for Young's Modulus, Tangent Modulus, and Chord Modulus, **03.01**

E 112-88 Test Methods for Determining the Average Grain Size, **03.01**

E 113 Discontinued 1981; Recommended Practice for Ultrasonic Testing by the Resonance Method

E 114-95 Practice for Ultrasonic Pulse-Echo Straight-Beam Examination by the Contact Method, **03.03**

E 115-87(1992)$^{\epsilon 1}$ Practice for Photographic Processing in Optical Emission Spectrographic Analysis, **03.05**

E 116-81(1991)$^{\epsilon 1}$ Practice for Photographic Photometry in Spectrochemical Analysis, **03.05**

E 117-64(1989) Method for Spectrographic Analysis of Pig Lead by the Point-to-Plane Technique, **03.05**

E 118-89 Test Methods for Chemical Analysis of Copper-Chromium Alloys, **03.05**

E 119-95a Test Methods for Fire Tests of Building Construction and Materials, **04.07**

E 120-89 Test Methods for Chemical Analysis of Titanium and Titanium Alloys, **03.05**

E 121-83(1989)$^{\epsilon 1}$ Test Methods for Chemical Analysis of Copper-Tellurium Alloys, **03.05**

E 122-89 Practice for Choice of Sample Size to Estimate a Measure of Quality for a Lot or Process, **14.02**

E 123-92 Specification for Apparatus for Determination of Water by Distillation, **14.02**

E 124-94 Specification for Weighing and Drying Apparatus for Microchemical Analysis, **14.02**

E 125-63(1993)$^{\epsilon 1}$ Reference Photographs for Magnetic Particle Indications on Ferrous Castings, **03.03**

E 126-92 Test Method for Inspection and Verification of Hydrometers, **14.03**

E 127-94a Practice for Fabricating and Checking Aluminum Alloy Ultrasonic Standard Reference Blocks, **03.03**

E 128-94 Test Method for Maximum Pore Diameter and Permeability of Rigid Porous Filters for Laboratory Use, **14.02**

E 129-74(1993)$^{\epsilon 1}$ Test Method for Spectrographic Analysis of Thermionic Nickel Alloys by the Powder Techniques, **03.05**

E 130-87(1992)$^{\epsilon 1}$ Practice for Designation of Shapes and Sizes of Graphite Electrodes, **03.05**

E 131-94 Terminology Relating to Molecular Spectroscopy, **03.06**

E 132-86(1992) Test Method for Poisson's Ratio at Room Temperature, **03.01**

E 133-92 Specification for Distillation Equipment, **14.02**

E 134 Discontinued 1987; Specification for Pensky-Martens Closed Flash Tester

E 135-94 Terminology Relating to Analytical Chemistry for Metals, Ores, and Related Materials, **03.05**

E 136-94a Test Method for Behavior of Materials in a Vertical Tube Furnace at 750°C, **04.07**

E 137 Discontinued 1992; Practice for Evaluation of Mass Spectrometers for Quantitative Analysis from a Batch Inlet

E 138 Discontinued 1981; Method for Wet Magnetic Particle inspection; Replaced by E 709

E 139-83(1990) Practice for Conducting Creep, Creep-Rupture, and Stress-Rupture Tests of Metallic Materials, **03.01**

E 140-95 Hardness Conversion Tables for Metals (Relationship Between Brinell Hardness, Vickers Hardness, Rockwell Hardness, Rockwell Superficial Hardness, and Knoop Hardness), **03.01**

E 141-91 Practice for Acceptance of Evidence Based on the Results of Probability Sampling, **14.02**

E 142-92 Method for Controlling Quality of Radiographic Testing, **03.03**

E 143-87(1993) Test Method for Shear Modulus at Room Temperature, **03.01**

E 144-94 Practice for Safe Use of Oxygen Combustion Bombs, **14.02**

E 145-94 Specification for Gravity-Convection and Forced-Ventilation Ovens, **14.02**

E 146 Discontinued 1991; Methods for Chemical Analysis of Zirconium and Zirconium Alloys

E 147-61(1991) Specification for Apparatus For Microdetermination Of Nitrogen By Kjeldahl Method, **14.02**

E 148 Discontinued 1987; Specification for Apparatus for Microdetermination of Nitrogen by the Dumas Method

E 149 Redesignated C 952

E 150 Discontinued 1984; Recommended Practice for Conducting Creep and Creep-Rupture Tension Tests of Metallic Materials Under Conditions of Rapid Heating and Short Times

E 151 Discontinued 1984; Recommended Practice for Tension Tests of Metallic Materials at Elevated Temperatures with Rapid Heating and Conventional or Rapid Strain Rates

E 152 Discontinued 1995; Methods of Fire Tests of Door Assemblies

E 153 Discontinued 1967; Method of Test for Bulk Density of Abrasive Grains

E 154-88(1993) Test Methods for Water Vapor Retarders Used in Contact with Earth Under Concrete Slabs, on Walls, or as Ground Cover, **04.07**

E 155-91 Reference Radiographs for Inspection of Aluminum and Magnesium Castings, **03.03**

E 156 Discontinued 1993; Test Method for Determination of Phosphorus In High-Phosphorus Brazing Alloys (Photometric Method)

E 157-88(1994) Practice for Assigning Crystallographic Phase Designations in Metallic Systems, **03.01**

E 158-86(1991) Practice for Fundamental Calculations to Convert Intensities into Concentrations in Optical Emission Spectrochemical Analysis, **03.05**

E 159-92 Test Method for Hydrogen Loss of Copper, Tungsten, and Iron Powders, **02.05**

E 160 Discontinued 1993: Test Method for Combustible Properties of Treated Wood by the Crib Test

E 161-87(1992) Specification for Precision Electroformed Sieves (Square Opening Series), **14.02**

E 162-94 Test Method for Surface Flammability of Materials Using a Radiant Heat Energy Source, **04.07**

E 163 Discontinued 1995; Methods of Fire Tests of Window Assemblies

E 164-94a Practice for Ultrasonic Contact Examination of Weldments, **03.03**

E 165-95 Test Method for Liquid Penetrant Examination, **03.03**

E 166 Discontinued 1978; Recommended Practice for Goniophotometry of Transmitting Objects and Materials; Replaced by E 167

E 167-91 Practice for Goniophotometry of Objects and Materials, **06.01**

E 168-92 Practices for General Techniques of Infrared Quantitative Analysis, **03.06**

E 169-93 Practices for General Techniques of Ultraviolet-Visible Quantitative Analysis, **03.06**

E 170-92 Terminology Relating to Radiation Measurements and Dosimetry, **12.02**

E 171-94 Specification for Standard Atmospheres for Conditioning and Testing Flexible Barrier Materials, **15.09**

E 172-90(1995)$^{\epsilon 1}$ Practice for Describing and Specifying the Excitation Source in Emission Spectrochemical Analysis, **03.05**

E 173-93 Practice for Conducting Interlaboratory Studies of Methods for Chemical Analysis of Metals, **03.05**

E 174 Discontinued 1968; Method of Test for Oxygen in Molybdenum

E 175-82(1990)$^{\epsilon 1}$ Terminology of Microscopy, **14.02**

E 176-93a Terminology of Fire Standards, **04.07**

E 177-90a Practice for Use of the Terms Precision and Bias in ASTM Test Methods, **04.02, 14.02**

E 178-94 Practice for Dealing with Outlying Observations, **14.02**

E 179-91a Guide for Selection of Geometric Conditions for Measurement of Reflection and Transmission Properties of Materials, **06.01**

E 180-94 Practice for Determining the Precision of ASTM Methods for Analysis and Testing of Industrial Chemicals, **15.05**

E 181-93 General Methods for Detector Calibration and Analysis of Radionuclides, **12.02**

E 182 Discontinued 1981; Methods for Analysis of Phosphorus-32

E 183 Discontinued 1975; Recommended Practice for Determining Changes in Chemical Reactivity of Inorganic Materials Exposed to High-Energy Radiation

E 184-79(1994) Practice for Effects of High-Energy Neutron Radiation on the Mechanical Properties of Metallic Materials, E 706 (1B), **12.02**

E 185-94 Practice for Conducting Surveillance Tests for Light-Water Cooled Nuclear Power Reactor Vessels, E 706 (1F), **12.02**

E 186-93 Reference Radiographs for Heavy-Walled (2 to 4½-in. (51 to 114-mm)) Steel Castings, **03.03**

E 187 Redesignated G 24

E 188 Discontinued 1971; Recommended Practice for Operating Enclosed Carbon-Arc Type Apparatus for Light Exposure of Nonmetailic Materials; Replaced by G 23

E 189 Discontinued 1988; Recommended Practice for Determining Temperature-Electrical Resistance Characteristics (EMF) of Metallic Materials

E 190-92 Test Method for Guided Bend Test for Ductility of Welds, **03.01**

E 191-64(1990) Specification for Apparatus For Microdetermination of Carbon and Hydrogen in Organic and Organo-Metallic Compounds, **14.02**

E 192-91 Reference Radiographs of Investment Steel Castings of Aerospace Applications, **03.03**

E 193-94 Specification for Laboratory Glass Micropipets, **14.02**

E 194-90 Test Method for Acid-Insoluble Content of Copper and Iron Powders, **02.05**

E 195 Discontinued 1984; Methods for Chemical Analysis of Reactor and Commercial Columbium

E 196–95 Practice for Gravity Load Testing of Floors and Flat Roofs, **04.07**
E 197 Discontinued 1981; Specification for Enclosures and Servicing Units for Tests Above and Below Room Temperature
E 198 Discontinued 1968; Method for Radiochemical Determination of Casium-137 in Aqueous Solutions
E 199 Discontinued 1966; Recommended Practice for Measuring Neutron Flux Environment for Reactor Irradiated Specimens; Replaced by E 261 to E 266
E 200–91 Practice for Preparation, Standardization, and Storage of Standard and Reagent Solutions for Chemical Analysis, **15.05**
E 201–70(1991)$^{\epsilon 1}$ Test Method for Calculation of Volume and Weight of Industrial Chemical Liquids, **15.05**
E 202–94a Test Methods for Analysis of Ethylene Glycols and Propylene Glycols, **15.05**
E 203–92a Test Method for Water Using Karl Fischer Reagent, **15.05**
E 204–92 Practices for Identification of Material by Infrared Absorption Spectroscopy, Using the ASTM Coded Band and Chemical Classification Index, **03.06**
E 205–64(1991) Specification for Oxygen Combustion Flask, **14.02**
E 206 Discontinued 1988; Definitions of Terms Relating to Fatigue Testing and the Statistical Analysis of Fatigue Data; Replaced by E 1150
E 207–88 Method of Thermal EMF Test of Single Thermoelement Materials By Comparison With a Secondary Standard of Similar EMF-Temperature Properties, **14.03**
E 208–95 Test Method for Conducting Drop-Weight Test to Determine Nil-Ductility Transition Temperature of Ferritic Steels, **03.01**
E 209–65(1993) Practice for Compression Tests of Metallic Materials at Elevated Temperatures with Conventional or Rapid Heating Rates and Strain Rates, **03.01**
E 210–63(1990) Specification for Microscope Objective Thread, **14.02**
E 211–82(1990) Specification for Cover Glasses and Glass Slides for Use in Microscopy, **14.02**
E 212–66(1993)$^{\epsilon 1}$ Test Method for Spectrographic Analysis of Carbon and Low-Alloy Steel by the Rod-to-Rod Technique, **03.05**
E 213–93 Practice for Ultrasonic Examination of Metal Pipe and Tubing, **03.03**
E 214–68(1991)$^{\epsilon 1}$ Practice for Immersed Ultrasonic Examination by the Reflection Method Using Pulsed Longitudinal Waves, **03.03**
E 215–87(1992)$^{\epsilon 1}$ Practice for Standardizing Equipment for Electromagnetic Examination of Seamless Aluminum-Alloy Tube, **03.03**
E 216 Discontinued 1969; Recommended Practice for Measuring Coating Thickness by Magnetic or Electromagnetic Methods; Replaced by E 376
E 217 Discontinued 1992; Test Method for Uranium by Controlled-Potential Coulometry
E 218 Discontinued 1968; Method for Radiochemical Determination of Cesium-137 in Aqueous Solutions (Chloroplatinate Method)
E 219–80(1995) Test Method for Atom Percent Fission in Uranium Fuel (Radiochemical Method), **12.02**
E 220 Discontinued 1995; Method for Calibration of Thermocouples by Comparison Techniques
E 221 Redesignated F 221
E 222–94 Test Methods for Hydroxyl Groups by Acetic Anhydride Acetylation, **15.05**
E 223–93 Test Methods for Analysis of Sulfuric Acid, **15.05**
E 224–94 Test Methods for Analysis of Hydrochloric Acid, **15.05**
E 225 Discontinued 1983; Method for Spectrographic Determination of Magnesium in Cast Iron by the Solution-Rotating Disk Technique
E 226 Discontinued 1987; Method for Spectrochemical Analysis of Magnesium Alloys for Calcium by Flame Photometry
E 227–90 Test Method for Optical Emission Spectrometric Analysis of Aluminum and Aluminum Alloys by the Point-to-Plane Technique, **03.05**
E 228–85(1989) Test Method for Linear Thermal Expansion of Solid Materials With a Vitreous Silica Dilatometer, **14.02**
E 229–70(1981)$^{\epsilon 1}$ Test Method for Shear Strength and Shear Modulus of Structural Adhesives, **15.06**
E 230–93 Temperature-Electromotive Force (EMF) Tables for Standardized Thermocouples, **14.03**
E 231 Discontinued 1985; Method for Static Determination of Young's Modulus of Metals at Low and Elevated Temperatures
E 232 Redesignated F 232
E 233–90 Test Method for Assay of *n*-Butyllithium Solutions, **15.05**
E 234–90 Test Method for Total Bromine Number of Unsaturated Aliphatic Chemicals, **15.05**
E 235–88 Specification for Thermocouples, Sheathed, Type K, for Nuclear or for Other High-Reliability Applications, **14.03**
E 236–66(1991) Specification for Apparatus For Microdetermination Of Alkoxyl Groups, **14.02**
E 237–94a Specification for Microvolumetric Vessels (Volumetric Flasks and Centrifuge Tubes), **14.02**
E 238–84(1989)$^{\epsilon 1}$ Method for Pin-Type Bearing Test of Metallic Materials, **03.01**
E 239 Redesignated G 26
E 240 Redesignated G 27
E 241–90 Practices for Increasing Durability of Building Constructions Against Water-Induced Damage, **04.07**
E 242–91 Reference Radiographs for Appearances of Radiographic Images as Certain Parameters Are Changed, **03.03**
E 243–90 Practice for Electromagnetic (Eddy-Current) Examination of Copper and Copper-Alloy Tubes, **03.03**
E 244–80(1995) Test Method for Atom Percent Fission in Uranium and Plutonium Fuel (Mass Spectrometric Method), **12.02**
E 245 Discontinued 1968; Method for Colorimetric Determination of Uranium in Aqueous Solutions; Replaced by E 318
E 246–95 Test Method for Iron in Iron Ores and Related Materials by Hydrogen Sulfide Reduction and Dichromate Titration, **03.05**
E 247–82(1991)$^{\epsilon 1}$ Test Method for Silica in Iron Ores and Manganese Ores, **03.05**
E 248–68(1988) Test Method for Manganese in Manganese Ore by the Pyrophosphate (Potentiometric) Method, **03.05**
E 249 Discontinued 1974; Specification for Standard Tire for Pavement Skid Resistance Tests; Replaced by E 112
E 250–76(1994)$^{\epsilon 1}$ Practice for Use of CODEN, (CODEN issued separately as ASTM DS 23), **03.06**
E 251–92 Test Methods for Performance Characteristics of Metallic Bonded Resistance Strain Gages, **03.01**
E 252–84(1994) Test Method for Thickness of Thin Foil and Film by Weighing, **02.02**
E 253–95 Terminology of Sensory Evaluation of Materials and Products, **15.07**
E 254 Redesignated F 254
E 255–91 Practice for Sampling Copper and Copper Alloys for Determination of Chemical Composition, **03.05**
E 256–91 Test Method for Chlorine in Organic Compounds by Sodium Peroxide Bomb Ignition, **15.05**
E 257–93 Test Method for Sulfur in Organic Compounds by Sodium Peroxide Bomb Ignition, **15.05**
E 258–67(1987)$^{\epsilon 1}$ Test Method for Total Nitrogen in Organic Materials by Modified Kjeldahl Method, **15.05**
E 259–93 Practice for Preparation of Pressed Powder White Reflectance Factor Transfer Standards for Hemispherical Geometry, **06.01**
E 260–91 Practice for Packed Column Gas Chromatography, **14.02**
E 261–90 Practice for Determining Neutron Fluence Rate, Fluence, and Spectra by Radioactivation Techniques, **12.02**
E 262–86(1991) Test Method for Determining Thermal Neutron Reaction and Fluence Rates by Radioactivation Techniques, **12.02**
E 263–93 Test Method for Measuring Fast-Neutron Reaction Rates by Radioactivation of Iron, **12.02**
E 264–92 Test Method for Measuring Fast-Neutron Reaction Rates by Radioactivation of Nickel, **12.02**
E 265–93 Test Method for Measuring Reaction Rates and Fast-Neutron Fluences by Radioactivation of Sulfur-32, **12.02**
E 266–92 Test Method for Measuring Fast-Neutron Reaction Rates by Radioactivation of Aluminum, **12.02**
E 267–90(1995) Test Method for Uranium and Plutonium Concentrations and Isotopic Abundances, **12.02**
E 268 Discontinued 1991; Terminology Relating to Electromagnetic Testing; Replaced by E 1316
E 269 Discontinued 1991; Definitions of Terms Relating to Magnetic Particle Examination; Replaced by E 1316
E 270 Discontinued 1991; Terminology Relating to Liquid Penetrant Examination; Replaced by E 1316
E 271–91 Test Methods for Analysis of Aqueous Hydrofluoric Acid, **15.05**
E 272–91 Reference Radiographs for High-Strength Copper-Base and Nickel-Copper Alloy Castings, **03.03**
E 273–93 Practice for Ultrasonic Examination of Longitudinal Welded Pipe and Tubing, **03.03**
E 274–90 Test Method for Skid Resistance of Paved Surfaces Using a Full-Scale Tire, **04.03**
E 275–93 Practice for Describing and Measuring Performance of Ultraviolet, Visible, and Near Infrared Spectrophotometers, **03.06**
E 276–93 Test Method for Particle Size or Screen Analysis at No. 4 (4.75-mm) Sieve and Finer for Metal-Bearing Ores and Related Materials, **03.05**
E 277 Discontinued 1990; Test Method for Total Iron in Iron Ores by Stannous Chloride Reduction and Dichromate Titration
E 278–86(1991)$^{\epsilon 1}$ Test Method for Phosphorus in Iron Ores (Titrimetric), **03.05**
E 279–92 Test Method for Determination of Abrasion Resistance of Iron Ore Pellets and Sinter (Tumbler Test), **03.05**
E 280–93 Reference Radiographs for Heavy-Walled (4½ to 12-in. (114 to 305-mm)) Steel Castings, **03.03**
E 281 Discontinued 1983; Method for Spectrographic Analysis of Carbon and Low-Alloy Steel by the Pellet Technique
E 282 Discontinued 1983; Method for Spectrographic Analysis of Carbon and Low-Alloy Steel by the Point-to-Plane Technique
E 283–91 Test Method for Determining the Rate of Air Leakage Through Exterior Windows, Curtain Walls, and Doors Under Specified Pressure Differences Across the Specimen, **04.07**
E 284–94a Terminology of Appearance, **06.01**
E 285–80(1990)$^{\epsilon 1}$ Test Method for Oxyacetylene Ablation Testing of Thermal Insulation Materials, **15.03**
E 286 Discontinued 1991; Test Method for Surface Flammability of Building Materials Using an 8-ft (2.44-m) Tunnel Furnace
E 287–94 Specification for Laboratory Glass Graduated Burets, **14.02**
E 288–94 Specification for Laboratory Glass Volumetric Flasks **14.02**
E 289–94b Test Method for Linear Thermal Expansion of Rigid Solids with Interferometry, **14.02**
E 290–92 Test Method for Semi-Guided Bend Test for Ductility of Metallic Materials, **03.01**
E 291–90 Test Methods for Chemical Analysis of Caustic Soda and Caustic Potash (Sodium Hydroxide and Potassium Hydroxide), **15.05**

F 627–94 Practice for Testing Flake of One-Time Film Typewriter Ribbons, **15.09**
F 628–93 Specification for Acrylonitrile-Butadiene-Styrene (ABS) Schedule 40 Plastic Drain, Waste, and Vent Pipe With a Cellular Core, **08.04**
F 629–86(1992) Practice for Radiography of Cast Metallic Surgical Implants, **13.01**
F 630 Discontinued 1988; Specification for Safety Consideration for Household Vacuum Cleaners
F 631–93 Guide for Collecting Skimmer Performance Data in Controlled Environments, **11.04**
F 632–90 Test Method for Measuring Small-Signal Common Emitter Current Gain of Transistors at High Frequencies, **10.04**
F 633 Discontinued 1988; Practice for Use of the High-Speed Printer as a Test Instrument for Carbon Paper; Replaced by F 1175
F 634 Discontinued 1986; Practice for Measurement of the Coating Transfer Resistance of Mechanical Carbonless CB Paper
F 635–85(1991) Guide for Selection of Tests for Material Properties of Liquid Thermoset Encapsulating Compounds for Electronic and Microelectronic Encapsulation, **10.04**
F 636–85(1991) Guide for Selection of Tests for Material Properties of Transfer Molding Compounds for Electronic and Microelectronic Encapsulation, **10.04**
F 637–85(1994)$^{\epsilon 1}$ Specification for Format, Physical Properties, and Test Methods for 19 and 35 mm Testable Tape Carrier for Perimeter Tape Carrier-Bonded Semiconductor Devices, **10.04**
F 638–88 Specification for Fine Aluminum—1 % Magnesium Wire for Semiconductor Lead-Bonding, **10.04**
F 639–93 Specification for Polyethylene Plastics for Medical Applications, **13.01**
F 640–79(1994)$^{\epsilon 1}$ Test Methods for Radiopacity of Plastics for Medical Use, **13.01**
F 641–93 Specification for Implantable Epoxy Electronic Encapsulants, **13.01**
F 642 Discontinued 1995; Specification for Stainless Steel Flexible Wire for Surgical Fixations for Soft Tissue
F 643 Discontinued 1993; Specification for Wrought Cobalt-Chromium Alloy Flexible Wire for Surgical Fixations for Soft Tissue; Replaced by F 1091
F 644 Discontinued 1993; Specification for Wrought Cobalt-Chromium Alloy Flexible Wire for Surgical Fixations for Bone; Replaced by F 1091
F 645–93 Guide for Selection, Design, and Installation of Thermoplastic Water Pressure Piping Systems, **08.04**
F 646 Not yet assigned
F 647–94 Practice for Evaluating and Specifying Implantable Shunt Assemblies for Neurosurgical Application, **13.01**
F 648 Discontinued 1995; Specification for Ultra-High-Molecular-Weight Polyethylene Powder and Fabricated Form for Surgical Implants
F 649–80(1992) Practice for Secondary Calibration of Airborne Particle Counter Using Comparison Procedures, **10.05**
F 650 Discontinued 1990; Practice for Determining Relative Bias of Two Particle Counters Using Comparison Procedures
F 651 Discontinued 1988; Method for Particle Counter Single-Point Calibration by the Median Method
F 652 Discontinued 1992; Methods for Measuring Mica Stampings or Substitutes Used in Electron Devices and Lamps
F 653–84(1990) Test Method for Evaluation of Electrostatic Masters, **15.09**
F 654–91 Specification for Residential Chain Link Fence Gates, **01.06**
F 655–89 Specification for Test Carpets and Pads for Vacuum Cleaner Testing, **15.07**
F 656–93 Specification for Primers for Use in Solvent Cement Joints of Poly(Vinyl Chloride) (PVC) Plastic Pipe and Fittings, **08.04**
F 657–92 Test Method for Measuring Warp and Total Thickness Variation on Silicon Wafers by Noncontact Scanning, **10.05**
F 658–87(1992) Practice for Defining Size Calibration, Resolution, and Counting Accuracy of Liquid-Borne Particle Counter Using Near-Monodisperse Spherical Particulate Materials, **10.05**
F 659–92 Specification for High Impact Resistant Eye Protective Devices, **15.07**
F 660–83(1993) Practice for Comparing Particle Size in the Use of Alternative Types of Particle Counters, **14.02**
F 661–92 Practice for Particle Count and Size Distribution Measurement in Batch Samples for Filter Evaluation Using an Optical Particle Counter **14.02**
F 662–86 Method for Measurement of Particle Count and Size Distribution in Batch Samples for Filter Evaluation Using an Electrical Resistance Particle Counter, **14.02**
F 663 Discontinued 1994; Practice for Manual Analysis of Interferometric Data by Least-Squares Fitting to a Plane Reference Surface
F 664 Discontinued 1994; Practice for Manual Analysis of Interferometric Data by Least-Squares Fitting Spherical Reference Surface & Computer-Aided Analysis by Least-Squares Fitting to Both Plane/Spherical Reference Surfaces
F 665–80(1993) Classification for Vinyl Chloride Plastics Used in Biomedical Application, **13.01**
F 666 Discontinued 1993; Specification for Stainless Steel Flexible Wire for Surgical Fixation for Bone; Replaced by F 1350
F 667–85 Specification for Large Diameter Corrugated Polyethylene Tubing and Fittings, **08.04**
F 668–94 Specification for Poly(Vinyl Chloride) (PVC)-Coated Steel Chain-Link Fence Fabric, **01.06**
F 669–92 Specification for Strength Requirements of Metal Posts and Rails for Industrial Chain Link Fence, **01.06**
F 670–87(1994)$^{\epsilon 1}$ Specification for Tanks, 5 and 10-Gal (20 and 40-L) Lube Oil Dispensing, **01.07**
F 671–90(1994)$^{\epsilon 1}$ Test Method for Measuring Flat Length on Slices of Electronic Materials, **10.05**
F 672–88$^{\epsilon 2}$ Test Method for Measuring Resistivity Profiles Perpendicular to the Surface of a Silicon Wafer Using a Spreading Resistance Probe, **10.05**
F 673–90$^{\epsilon 1}$ Test Methods for Measuring Resistivity of Semiconductor Slices or Sheet Resistance of Semiconductor Films with a Noncontact Eddy-Current Gage, **10.05**
F 674–92 Practice for Preparing Silicon for Spreading Resistance Measurements, **10.05**
F 675–91 Test Method for Measuring Nonequilibrium Transient Photocurrents from *p-n* Functions, **10.04**
F 676–93 Test Method for Measuring Unsaturated TTL Sink Current, **10.04**
F 677 Discontinued 1992; Test Method for Fluid and Grease Resistance of Thermoset Encapsulating Compounds Used in Electronic and Microelectronic Applications
F 678 Discontinued 1989; Specification for Polyethylene Gas Pressure Pipe Tubing and Fittings; Replaced by D 2513
F 679–89 Specification for Poly(Vinyl Chloride) (PVC) Large-Diameter Plastic Gravity Sewer Pipe and Fittings, **08.04**
F 680–80(1993) Test Methods for Nails, **15.08**
F 681–82(1993)$^{\epsilon 1}$ Practice for Use of Branch Connections, **01.07**
F 682–82a(1993$^{\epsilon 1}$ Specification for Wrought Carbon Steel Sleeve-Type Pipe Couplings, **01.07**
F 683–94 Practice for Selection and Application of Thermal Insulation for Piping and Machinery, **01.07**
F 684 Not yet assigned
F 685–86(1991) Practice for Determining Toner Usage, Efficiency, and Dusting Nonheat Fixing Copiers Using Single-Component Toner Systems, **15.09**
F 686–94 Practice for Evaluation of Image Quality Produced by a Carbonless Copy Paper with an Electric and Electronic Typewriter, **15.09**
F 687 Discontinued 1988; Practice for On-Site Calibration of Liquid-Borne Automatic Particle Counters With Adjustable Individual Size Thresholds
F 688–95 Specification for Wrought Cobalt-35 Nickel-20 Chromium-10 Molybdenum Alloy Plate, Sheet, and Foil for Surgical Implants, **13.01**
F 689–80(1990)$^{\epsilon 1}$ Practice for Determination of the Temperature of Above-Ground Plastic Gas Pressure Pipe Within Metallic Casings, **08.04**
F 690–86(1994) Practice for Underground Installation of Thermoplastic Pressure Piping Irrigation Systems, **08.04**
F 691–80(1991)$^{\epsilon 1}$ Practice for Preparing Photoplates for Measuring Flatness Deviation, **10.05**
F 692–80(1991) Test Method for Measuring Adhesion Strength of Solderable Films to Substrates, **10.04**
F 693–95 Practice for Sealing Seams of Resilient Sheet Flooring Products by Use of Liquid Seam Sealers, **15.04**
F 694–92 Test Method for Heel-Attaching Strength of Women's Shoes, **15.07**
F 695–81(1987)$^{\epsilon 1}$ Practice for Evaluation of Test Data Obtained by Using the Horizontal Pull Slipmeter (HPS) or the James Machine for Measurement of Static Slip Resistance of Footwear Sole, Heel, or Related Materials, **15.07**
F 696–91 Specification for Leather Protectors for Rubber Insulating Gloves and Mittens, **10.03**
F 697–80(1992) Practice for Care and Use of Mouthguards, **15.07**
F 698–94 Specification for Physical Information to Be Provided for Amusement Rides and Devices, **15.07**
F 699–90 Practice for Accelerated Conditioning of Polybutylene Pipe and Tubing for Subsequent Quality Control Testing, **08.04**
F 700–93 Practice for Care and Handling of Intracranial Aneurysm Clips and Instruments, **13.01**
F 701–81(1993) Practice for Care and Handling of Neurosurgical Implants and Instruments, **13.01**
F 702–93 Specification for Polysulfone Resin for Medical Applications, **13.01**
F 703–81(1986) Specification for Implantable Breast Prostheses, **13.01**
F 704–81(1991) Practice for Selecting Bolting Lengths for Piping System Flanged Joints, **01.07**
F 705 Not yet assigned
F 706–81(1986)$^{\epsilon 1}$ Practice for Determination of Fusion Temperature of Dry Electrostatic Heat Fixing Toners, **15.09**
F 707/F707M–94 Specification for Modular Gage Boards, **01.07**
F 708–92 Practice for Design and Installation of Rigid Pipe Hangers, **01.07**
F 709 Discontinued 1993; Specification for Gasket—Asbestos Metallic Cloth Material
F 710–92 Practice for Preparing Concrete Floors and Other Monolithic Floors to Receive Resilient Flooring, **15.04**
F 711–89 Specification for Fiberglass-Reinforced Plastic (FRP) Rod and Tube Used in Live Line Tools, **10.03**
F 712–88 Test Methods for Electrically Insulating Plastic Guard Equipment for Protection of Workers, **10.03**
F 713 Not yet assigned
F 714–94 Specification for Polyethylene (PE) Plastic Pipe (SDR-PR) Based on Outside Diameter, **08.04**
F 715–95 Methods of Testing Spill Control Barrier Membrane Materials, **11.04**
F 716–82(1993)$^{\epsilon 1}$ Methods of Testing Sorbent Performance of Absorbents, **11.04**
F 717–89(1995)$^{\epsilon 1}$ Specification for Football Helmets, **15.07**
F 718–93 Standard for Shipbuilders and Marine Paints and Coatings Product/Procedure Data Sheet, **01.07**

for Use by Electrical Workers Exposed to Momentary Electric Arc and Related Thermal Hazards, **10.03**

F 1507–94 Specification for Surge Suppressors for Shipboard Use, **01.07**

F 1508–94 Specification for Angle Style, Pressure Relief Valves for Steam, Gas, and Liquid Services, **01.07**

F 1509–94 Test Methods for Determining Acceptability of Ribbon Welds in Fabric Cartridges, **15.09**

F 1510–94 Specification for Rotary Positive Displacement Pumps, Commercial Ships Use, **01.07**

F 1511–94 Specification for Mechanical Seals for Shipboard Pump Applications, **01.07**

F 1512–94 Practice for Ultrasonic C-Scan Bond Evaluation of Sputtering Target-Backing Plate Assemblies, **10.04**

F 1513–94 Specification for Pure Aluminum (Unalloyed) Source Material for Electronic Thin Film Applications, **10.04**

F 1514–95 Test Method for Measuring Heat Stability of Resilient Vinyl Flooring by Color Change, **15.04**

F 1516–94 Practice for Sealing Seams of Resilient Flooring Products by the Heat Weld Method (when Recommended), **15.04**

F 1517–94 Guide for the Scope of Performance of Emergency Medical Services Ambulance Operations, **13.01**

F 1518–94 Practice for Cleaning and Disinfection of Flexible Fiberoptic and Video Endoscopes Used in the Examination of the Hollow Viscera, **13.01**

F 1519–94 Test Method for Qualitative Analysis of Volatile Extractables in Microwave Susceptors Used to Heat Food Products, **15.09**

F 1520–94 Test Method for Determining the Drive Torque for Film and Fabric Ribbon Cartridges, **15.09**

F 1521–94 Test Methods for Performance of Range Tops, **15.07**

F 1522–95 Guide for the Use of the Steam Stripping Process in Mitigating Chemical Spills, **11.04**

F 1523–94 Guide for the Selection of Booms According to Water Body Classifications, **11.04**

F 1524–95 Guide for Use of Advanced Oxidation Process for the Mitigation of Chemical Spills, **11.04**

F 1526–94a Test Method for Measuring Surface Metal Contamination on Silicon Wafers by Total Reflection X-Ray Fluorescence Spectroscopy, **10.05**

F 1527–94 Guide for Application of Silicon Standard Reference Materials and Reference Wafers for Calibration and Control of Instruments for Measuring Resistivity of Silicon, **10.05**

F 1528–94 Test Method for Measuring Boron Contamination in Heavily Doped N-Type Silicon Substrates by Secondary Ion Mass Spectrometry, **10.05**

F 1529–94 Test Method for Sheet Resistance Uniformity Evaluation by In-Line Four Point Probe with the Dual-Configuration Procedure, **10.05**

F 1530–94 Test Method for Measuring Flatness, Thickness and Thickness Variation on Silicon Wafers by Automated Noncontact Scanning, **10.05**

F 1531–94 Test Method for Comparing Printer or Copier Cartridges, **15.09**

F 1532–94 Guide for the Qualification, Selection, Training, Utilization and Supervision of Security Screening Personnel, **15.07**

F 1533–94 Specification for Deformed Polyethylene (PE) Liner, **08.04**

F 1534M–94$^{\epsilon 1}$ Test Method for Determining Changes in Fire-Test-Response Characteristics of Cushioning Materials after Water Leaching, **04.07**

F 1535–94 Test Method for Carrier Recombination Lifetime in Silicon Wafers by Noncontact Measurement of Photoconductivity Decay by Microwave Reflectance, **10.05**

F 1536–95 Test Method for Determining Strength and Setting Time of Synthetic Water-Activated Polyurethane Fiberglass Orthopaedic Casting Tape, **13.01**

F 1537–94 Specification for Wrought Cobalt-Chromium-Molybdenum Alloy for Surgical Implants, **13.01**

F 1538–94 Specification for Glass and Glass Ceramic Biomaterials for Implantation, **13.01**

F 1541–94 Terminology and Classification of External Skeletal Fixators, **13.01**

F 1542–94 Specification for the Requirements and Disclosure of Self-Closing Aneurysm Clips, **13.01**

F 1543–94 Specification for Shock Attenuation Properties of Fencing Surfaces, **15.07**

F 1544–94 Specification for Determining the Rating Velocity of an Archery Bow, **15.07**

F 1545–95 Specification for Plastic-Lined Ferrous Metal Pipe, Fittings, and Flanges, ' **08.04**

F 1546–94 Specification For Fire Hose Nozzles, **01.07**

F 1547–94 Guide Listing Relevant Standards and Publications for Commercial Shipbuilding, **01.07**

F 1548–94 Specification for the Performance of Fittings for Use with Gasketed Mechanical Couplings Used in Piping Applications, **01.07**

F 1549–94 Terminology Relating to Underwater Search, and Rescue and Recovery Activities, **13.01**

F 1550M–94 Test Method for Determining Fire-Test-Response Characteristics of Components or Composites of Mattresses or Furniture for Use in Correctional Facilities After Exposure to Vandalism, by Employing a Bench Scale Oxygen Consumption Calorimeter, **04.07**

F 1551–94 Test Methods for Comprehensive Characterization of Synthetic Turf Playing Surfaces and Materials, **15.07**

F 1552–94 Practice for Training, Instructor Qualification and Certification Eligibility of Emergency Medical Dispatchers, **13.01**

F 1553–94 Guide for Specifying Chain Link Fence, **01.06**

F 1554–94 Specification For Anchor Bolts, Steel, 36, 55, and 105-ksi Yield Strength, **15.08**

F 1555–94 Guide for Characteristics for Extremity Splints, **13.01**

F 1556–94 Guide for Spinal Immobilization and Extrication (Spine) Device Characteristics, **13.01**

F 1557–94 Guide for Full Body Spinal Immobilization Devices (FBSID) Characteristics, **13.01**

F 1558–94 Guide for Characteristics for Adjunct Cervical Spine Immobilization Devices (ACSID), **13.01**

F 1559–94 Guide for Characteristics for Cervical Spine Immobilization Collar(s) (CSIC), **13.01**

F 1560–94 Practice for Emergency Medical Dispatch Management, **13.01**

F 1561–94 Performance Requirements for Plastic Chairs for Outdoor Use, **15.07**

F 1562–95 Guide for Use-Oriented Foreign Language Instruction, **15.07**

F 1563–94 Specification for Tools to Squeeze-Off Polyethylene (PE) Gas Pipe or Tubing, **08.04**

F 1564–94 Specification for Structure-Mounted Insulating Work Platforms for Electrical Workers, **10.03**

F 1565–94 Specification for Pressure-Reducing Valves for Steam Service, **01.07**

F 1566–94 Test Methods for Evaluation of Innersprings and Boxsprings, **15.07**

F 1568–94 Specification for Food Processors, Electric, **15.07**

F 1569–94 Guide for Generation of Consensus Reference Materials for Semiconductor Technology, **10.05**

F 1570–94 Test Method for Determining the Tactile Ratio of a Membrane Switch, **10.05**

F 1571–94 Test Method for Determination of Abrasion and Smudge Resistance of Images Produced from Business Copy Products (Sutherland Method), **15.09**

F 1572–94 Test Methods for Tire Performance Testing on Snow and Ice Surfaces, **09.02**

F 1573–95 Specification for Anesthetic Equipment—Oropharyngeal and Nasopharyngeal Airways, **13.01**

F 1574–95 Test Method for Compressive Strength of Gaskets at Elevated Temperatures, **09.02**

F 1576–95a Guide for Selection of Security Control Systems, Part II—Defining the Central Control System, **04.07**

F 1577–95 Test Methods for Detention Locks for Swinging Doors, **04.07**

F 1579–95 Specification for Polyaryletherketone (PAEK) Resins for Surgical Implant Applications, **13.01**

F 1580–95 Specification for Titanium and Titanium-6 % Aluminum-4 % Vanadium Alloy Powders for Coatings of Surgical Implants, **13.01**

F 1581–95 Specification for Composition of Anorganic Bone for Surgical Implants, **13.01**

F 1582–95 Terminology Relating to Spinal Implants, **13.01**

F 1583–95 Practice for Communications Procedures—Phonetics, **13.01**

F 1584–95 Practice for Marking Buildngs During Disaster Search Operations, **13.01**

F 1586–95 Specification for Wrought Nitrogen Strengthened-21 Chromium-10 Nickel-3 Manganese-2.5 Molybdenum Stainless Steel Bar for Surgical Implants, **13.01**

F 1587–95 Specification for Head and Face Protective Equipment for Ice Hockey Goaltenders, **15.07**

F 1590–95 Specification for Tracheostomy Tube Connectors, **13.01**

F 1591–95 Practice for Visual Signals Between Persons on the Ground and in Aircraft During Ground Emergencies, **13.01**

F 1592–95a Test Method for Detention Hollow Metal Vision Systems, **04.07**

F 1599–95 Guide for Collecting Performance Data on Temporary Storage Devices, **11.04**

F 1600–95 Terminology Relating to Bioremediation, **11.04**

F 1602–95 Specification for Kettles, Steam-Jacketed, 20 to 200 gal (75.7 to 757 L), Floor or Wall Mounted, Direct Connected, Gas Fired and Electric Fired, **15.07**

F 1603–95 Specification for Kettles, Steam-Jacketed, 32 oz to 20 gal (1 to 75.7 L), Tilting, Table Mounted, Direct Connected, Gas Fired and Electric Fired,, **15.07**

F 1604–95 Specification for Freezers, Ice Cream, Soft Serve, Shake, **15.07**

F 1605–95 Test Method for Performance of Double-Sided Griddles, **15.07**

EXHIBIT 24

1996

ANNUAL BOOK OF ASTM STANDARDS

SECTION
00

Index

VOLUME
00.01 Subject Index; Alphanumeric List

Revision issued annually

TA401
.A653
V.00.01,1996

Editorial Staff

Director, Editorial Services:
Roberta A. Storer

Manager, Standards Publications:
Joan L. Cornillot
Paula C. Fazio-Fluehr

Senior Indexer:
H. Joel Shupak

Editors:
Nicole C. Baldini
Elizabeth Barszczewski
Lisa Bernhardt
Elizabeth L. Gutman
Sharon L. Kauffman
Joanne G. Kramer
Vernice A. Mayer
Patricia A. McGee
Todd J. Sandler
Christina L. Vogel
Richard F. Wilhelm

Editorial Assistant:
Jennifer C. Azara

LIBRARY OF CONGRESS
DEC 13 1996
COPYRIGHT OFFICE

Library of Congress Catalog Card Number: 83-641658

ISBN 0-8031-2356-6 (set)
ISBN 0-8031-2355-8 (volume)

Copyright © 1996 AMERICAN SOCIETY FOR TESTING AND MATERIALS, West Conshohocken, PA. Prior editions copyrighted 1995 and earlier, by the American Society for Testing and Materials. All rights reserved. This material may not be reproduced or copied, in whole or in part, in any printed, mechanical, electronic, film, or other distribution and storage media, without the written consent of the publisher.

Photocopy Rights

Authorization to photocopy items for internal, personal, or educational classroom use, or the internal, personal, or educational classroom use of specific clients, is granted by the American Society for Testing and Materials (ASTM) provided that the appropriate fee is paid to the Copyright Clearance Center, 222 Rosewood Drive, Danvers, MA 01923, Tel: 508-750-8400; online: http://www.copyright.com/

Printed in Easton, MD, U.S.A.

Alphanumeric List

ASTM Standards

Standards:

Specifications	2777
Test Methods	7012
Terminology	210
Total	9999

Each ASTM Standard has a unique serial designation. It is comprised of a capital letter indicating general classification (A, ferrous metals; B, nonferrous metals; C, cementitious, ceramic, concrete, and masonry materials; D, miscellaneous materials; E, miscellaneous subjects; F, materials for specific applications; G, corrosion, deterioration, and degradation of materials; ES, emergency standards; P, proposals; PS, provisional standards), a serial number (one to four digits), a dash, and the year of issue.

In each serial designation, the number following the dash indicates the year of original adoption as standard or, in the case of revision, the year of last revision. Thus, standards adopted or revised during the year 1996 have as their final number, 96. A letter following this number indicates more than one revision during that year, that is 96a indicates the second revision in 1996, 96b the third revision, etc. Standards that have been reapproved without change are indicated by the year of last reapproval in parentheses as part of the designation number, for example, (1996). A superscript epsilon indicates an editorial change since the last revision or reapproval; $\epsilon 1$ for the first change, $\epsilon 2$ for the second, etc.

If a standard is written in acceptable metric units and has a companion standard written in inch-pound units (or other units), the metric standard is identified by a letter M after the serial number; this standard contains "hard metric" units.

If a standard is written in inch-pound units (or other units) and acceptable metric units, the document is identified by a dual alphanumeric designation.

When reference is made to a standard, the *complete* designation should be given. Best practice is to state the *designation and title.*

The boldface number(s) following the title refer to the volume(s) of the *Annual Book of ASTM Standards* in which the standard appears.

This list includes only those standards which appear in the 1996 edition of each volume of the *Annual Book of ASTM Standards*. New and revised standards that were approved after the closing date for the volume are available as separate reprints and will be listed in next year's edition.

Each ASTM standard is available as a separate reprint from ASTM. Price and order information are available from ASTM Customer Service, 100 Barr Harbor Drive, West Conshohocken, PA 19428-2959, 610-832-9585.

A 456-95a Specification for Magnetic Particle Examination of Large Crankshaft Forgings, **01.05**

A 457 Discontinued 1990: Specification for Hot-Worked, Hot-Cold-Worked, and Cold-Worked Alloy Steel Plate, Sheet, and Strip for High Strength at Elevated Temperatures

A 458 Discontinued 1991: Specification for Hot-Worked, Hot-Cold-Worked, and Cold-Worked Alloy Steel Bars for High Strength at Elevated Temperatures

A 459-88(1994) Specification for Zinc-Coated Flat Steel Armoring Tape, **01.06**

A 460-94 Specification for Copper-Clad Steel Wire Strand, **01.06**

A 461 Discontinued 1971: Specification for Precipitation Hardening Alloy Bars, Forgings, and Forging Stock for High-Temperature Service; Replaced by A 564, A 637, A 538, A 639

A 462 Discontinued—Replaced by E 165

A 463/A463M-95 Specification for Steel Sheet, Aluminum-Coated, by the Hot-Dip Process, **01.06**

A 464 Discontinued 1968: Recommended Practice for Use of Magnetic Type Instruments for Measurement of Thickness of Hot-Dip Zinc Coatings on Iron and Steel; Replaced by A 376

A 465 Discontinued 1975: Specification for Leaded Carbon Steel Forged Pipe Flanges and Parts for Pressure and General Service

A 466/A466M-93 Specification for Weldless Carbon Steel Chain, **01.05**

A 467-86a Specification for Machine and Coil Chain, **01.05**

A 467/A467M-93 Specification for Machine and Coil Chain, **01.05**

A 468 Discontinued 1969: Method of Normal Magnetic Induction Characteristics of Carbon and Alloy Steel Generator Rotor Forgings; Replaced by A 6, A 341

A 469-94a Specification for Vacuum-Treated Steel Forgings for Generator Rotors, **01.05**

A 470-95 Specification for Vacuum-Treated Carbon and Alloy Steel Forgings for Turbine Rotors and Shafts, **01.05**

A 471-94 Specification for Vacuum-Treated Alloy Steel Forgings for Turbine Rotor Disks and Wheels, **01.05**

A 472-93 Test Method for Heat Stability of Steam Turbine Shafts and Rotor Forgings, **01.05**

A 473-95a Specification for Stainless and Heat-Resisting Steel Forgings, **01.03**

A 474-94 Specification for Aluminum-Coated Steel Wire Strand, **01.06**

A 475-95 Specification for Zinc-Coated Steel Wire Strand, **01.06**

A 476-90 Specification for Ductile Iron Castings for Paper Mill Dryer Rolls, **01.02**

A 476M-84(1993) Specification for Ductile Iron Castings for Paper Mill Dryer Rolls [Metric], **01.02**

A 477 Discontinued 1991: Specification for Hot-Worked, Hot-Cold Worked and Cold-Worked Alloy Steel Forgings and Forging Billets for High Strength at Elevated Temperatures

A 478-95a Specification for Chromium-Nickel Stainless and Heat-Resisting Steel Weaving and Knitting Wire, **01.03**

A 479/A479M-95a Specification for Stainless and Heat-Resisting Steel Bars and Shapes for Use in Boilers and Other Pressure Vessels, **01.03**

A 480/A480M-95 Specification for General Requirements for Flat-Rolled Stainless and Heat-Resisting Steel Plate, Sheet, and Strip, **01.03**

A 481-94 Specification for Chromium Metal, **01.02**

A 482-93 Specification for Ferrochrome-Silicon, **01.02**

A 483-64(1994) Specification for Silicomanganese, **01.02**

A 484/A484M-94b Specification for General Requirements for Stainless Steel Bars, Billets, and Forgings, **01.03**

A 485-94 Specification for High Hardenability Antifriction Bearing Steel, **01.05**

A 486/A486M Discontinued 1989: Specification for Steel Castings for Highway Bridges

A 487/A487M-93 Specification for Steel Castings Suitable for Pressure Service, **01.02**

A 488/A488M-94 Practice for Steel Castings, Welding, Qualification of Procedures and Personnel, **01.02**

A 489-93 Specification for Carbon Steel Lifting Eyes, **15.08**

A 490-93 Specification for Heat-Treated Steel Structural Bolts, 150 ksi Minimum Tensile Strength, **15.08**

A 490M-93 Specification for High-Strength Steel Bolts, Classes 10.9 and 10.9.3, for Structural Steel Joints [Metric], **15.08**

A 491-94 Specification for Aluminum-Coated Steel Chain-Link Fence Fabric, **01.06**

A 492-95 Specification for Stainless and Heat-Resisting Steel Rope Wire, **01.03**

A 493-95 Specification for Stainless and Heat-Resisting Steel Wire and Wire Rods for Cold Heading and Cold Forging, **01.03**

A 494/A494M-94 Specification for Castings, Nickel and Nickel Alloy, **01.02**

A 495-94 Specification For Calcium-Silicon Alloys, **01.02**

A 496-94 Specification for Steel Wire, Deformed, for Concrete Reinforcement, **01.04**

A 497-94a Specification for Steel Welded Wire Fabric, Deformed, for Concrete Reinforcement, **01.04**

A 498-94 Specification for Seamless and Welded Carbon, Ferritic, and Austenitic Alloy Steel Heat-Exchanger Tubes with Integral Fins, **01.01**

A 499 Discontinued 1995; Specification for Steel Bars and Shapes, Carbon, Rolled from "T" Rails

A 500-93 Specification for Cold-Formed Welded and Seamless Carbon Steel Structural Tubing in Rounds and Shapes, **01.01**

A 501-93 Specification for Hot-Formed Welded and Seamless Carbon Steel Structural Tubing, **01.01**

A 502-93 Specification for Steel Structural Rivets, **15.08**

A 503-75(1994) Specification for Ultrasonic Examination of Large Forged Crankshafts, **01.05**

A 504-93 Specification for Wrought Carbon Steel Wheels, **01.04**

A 505-87(1993)$^{\varepsilon 1}$ Specification for Steel, Sheet and Strip, Alloy, Hot-Rolled and Cold-Rolled, General Requirements for, **01.03**

A 506-93(1993)$^{\varepsilon 1}$ Specification for Steel, Sheet and Strip, Alloy, Hot-Rolled and Cold-Rolled, Regular Quality and Structural Quality, **01.03**

A 507-93(1993)$^{\varepsilon 1}$ Specification for Steel, Sheet and Strip, Alloy, Hot-Rolled and Cold-Rolled, Drawing Quality, **01.03**

A 508/A508M-95 Specification for Quenched and Tempered Vacuum-Treated Carbon and Alloy Steel Forgings for Pressure Vessels, **01.05**

A 509 Discontinued 1983: Definition of Terms Relating to Steel Forgings; Replaced by A 788

A 510-94 Specification for General Requirements for Wire Rods and Coarse Round Wire, Carbon Steel, **01.03**

A 510M-95 Specification for General Requirements for Wire Rods and Coarse Round Wire, Carbon Steel [Metric], **01.03**

A 511-90 Specification for Seamless Stainless Steel Mechanical Tubing, **01.01**

A 512-94 Specification for Cold-Drawn Buttweld Carbon Steel Mechanical Tubing, **01.01**

A 513-94 Specification for Electric-Resistance-Welded Carbon and Alloy Steel Mechanical Tubing, **01.01**

A 514/A514M-94a Specification for High-Yield-Strength, Quenched and Tempered Alloy Steel Plate, Suitable for Welding, **01.04**

A 515/A515M-92 Specification for Pressure Vessel Plates, Carbon Steel, for Intermediate- and Higher-Temperature Service, **01.04**

A 516/A516M-90 Specification for Pressure Vessel Plates, Carbon Steel, for Moderate- and Lower-Temperature Service, **01.04**

A 517/A517M-93 Specification for Pressure Vessel Plates, Alloy Steel, High-Strength, Quenched and Tempered, **01.04**

A 518-92 Specification for Corrosion-Resistant High-Silicon Iron Castings, **01.02**

A 518M-92 Specification for Corrosion-Resistant High-Silicon Iron Castings [Metric], **01.02**

A 519-94 Specification for Seamless Carbon and Alloy Steel Mechanical Tubing, **01.01**

A 520-90 Specification for Supplementary Requirements for Seamless and Electric-Resistance-Welded Carbon Steel Tubular Products for High-Temperature Service Conforming to ISO Recommendations for Boiler Construction, **01.01**

A 521-76(1992)$^{\varepsilon 1}$ Specification for Steel, Closed-Impression Die Forgings for General Industrial Use, **01.05**

A 522/A522M-95b Specification for Forged or Rolled 8 and 9 % Nickel Alloy Steel Flanges, Fittings, Valves, and Parts for Low-Temperature Service, **01.01**

A 523-93 Specification for Plain End Seamless and Electric-Resistance-Welded Steel Pipe for High-Pressure Pipe-Type Cable Circuits, **01.01**

A 524-93 Specification for Seamless Carbon Steel Pipe for Atmospheric and Lower Temperatures, **01.01**

A 525 Discontinued 1994; Specification for General Requirements for Steel Sheet, Zinc-Coated (Galvanized) by the Hot-Dip Process; Replaced by A 653/A653M

A 525M Discontinued 1994; Replaced by A 653/A653M

A 526/A526M Discontinued 1994; Specification for Steel Sheet, Zinc-Coated (Galvanized) by the Hot-Dip Process, Commercial Quality; Replaced by A 653/A653M

A 527/A527M Discontinued 1994; Specification for Steel Sheet, Zinc-Coated (Galvanized) by the Hot-Dip Process, Lock-Forming Quality; Replaced by A 653/A653M, A 924/A924M

A 528/A528M Discontinued 1994; Specification for Steel Sheet, Zinc-Coated (Galvanized) by the Hot-Dip Process, Drawing Quality; Replaced by A 9653/A653M, A 924/A924M

A 529/A529M-94 Specification for High-Strength Carbon-Manganese Steel of Structural Quality, **01.04**

A 530/A530M-92a Specification for General Requirements for Specialized Carbon and Alloy Steel Pipe, **01.01**

A 531/A531M-91 Practice for Ultrasonic Inspection of Turbine-Generator Steel Retaining Rings, **01.05**

A 532/A532M-93a Specification for Abrasion-Resistant Cast Irons, **01.02**

A 533/A533M-93 Specification for Pressure Vessel Plates, Alloy Steel, Quenched and Tempered, Manganese-Molybdenum and Manganese-Molybdenum-Nickel, **01.04**

A 534-94 Specification for Carburizing Steels for Anti-Friction Bearings, **01.05**

A 535-85(1992) Specification for Special-Quality Ball and Roller Bearing Steel, **01.05**

A 536-84(1993) Specification for Ductile Iron Castings, **01.02**

A 537/A537M-95 Specification for Pressure Vessel Plates, Heat-Treated, Carbon-Manganese-Silicon Steel, **01.04**

A 538/A538M Discontinued 1989: Specification for Pressure Vessel Plates, Alloy Steel, Precipitation Hardening (Maraging), 18 Percent Nickel

A 539-90a Specification for Electric-Resistance-Welded Coiled Steel Tubing for Gas and Fuel Oil Lines, **01.01**

A 540/A540M-93 Specification for Alloy-Steel Bolting Materials for Special Applications, **01.01**

A 541/A541M-95 Specification for Quenched and Tempered Carbon and Alloy Steel Forgings for Pressure Vessel Components, **01.05**

A 542/A542M-95 Specification for Pressure Vessel Plates, Alloy Steel,

B. NONFERROUS METALS

B 1–95 Specification for Hard-Drawn Copper Wire, **02.03**
B 2–94 Specification for Medium-Hard-Drawn Copper Wire, **02.03**
B 3–95 Specification for Soft or Annealed Copper Wire, **02.03**
B 4 Discontinued 1981; Specification Tough-Pitch Lake Copper-Refinery Shapes
B 5–95 Specification for Electrolytic Tough-Pitch Copper Refinery Shapes, **02.01**
B 6–95a Specification for Zinc, **02.04**
B 7 Discontinued 1941; Specification for Copper-Base Alloys in Ingot Form for Sand Castings; Replaced by B 30
B 8–95 Specification for Concentric-Lay-Stranded Copper Conductors, Hard, Medium-Hard, or Soft, **02.03**
B 9–90 Specification for Bronze Trolley Wire, **02.03**
B 10 Discontinued 1934; Specification for Tin-Bronze and Leaded Tin-Bronze Sand Castings
B 11 Discontinued 1981; Specification for Copper Plates for Locomotive Fireboxes
B 12 Discontinued 1982; Specification for Copper Rods for Locomotive Staybolts; Replaced by B 133
B 13 Discontinued 1961; Specification for Seamless Copper Boiler Tubes
B 14 Discontinued 1955; Specification for Seamless Brass Boiler Tubes
B 15 Discontinued 1939; Specification for Copper and Copper-Base Alloy Forging Rod, Bar, and Shapes; Replaced by B 124
B 16–92 Specification for Free-Cutting Brass Rod, Bar, and Shapes for Use in Screw Machines, **02.01**
B 16M–92 Specification for Free-Cutting Brass Rod, Bar, and Shapes for Use in Screw Machines [Metric], **02.01**
B 17 Discontinued 1927; Specification for Bronze Castings in the Rough for Locomotive Wearing Parts; Replaced by B 66, B 67
B 18 Discontinued 1942; Methods of Testing Chemical Analysis of Lead, Tin, and Base Solder Metal; Replaced by E 46
B 19–86(1993)$^{\epsilon 1}$ Specification for Cartridge Brass Sheet, Strip, Plate, Bar, and Disks (Blanks), **02.01**
B 20 Discontinued 1940; Specification for Cartridge Brass Sheet, Strip, Plate, Bar, and Disks; Combined with B 19
B 21–90 Specification for Naval Brass Rod, Bar, and Shapes, **02.01**
B 21M–90a Specification for Naval Brass, Rod, Bar, and Shapes [Metric], **02.01**
B 22–95 Specification for Bronze Castings for Bridges and Turntables, **02.01**
B 23–94 Specification for White Metal Bearing Alloys (Known Commercially as Babbitt Metal), **02.04**
B 24 Discontinued 1956; Specification for Aluminum Ingots for Remelting
B 25 Discontinued 1946; Specification for Aluminum Alloy Sheet and Plate; Replaced by B 209
B 26/B26M–95 Specification for Aluminum-Alloy Sand Castings, **02.02**
B 27 Discontinued 1943; Methods of Testing Chemical Analysis for Sulfur in Special Brasses and Bronzes; Replaced by E 54
B 28 Discontinued 1943; Methods of Testing Chemical Analysis of Special Brasses and Bronzes; Replaced by E 54
B 29–92 Specification for Pig Lead, **02.04**
B 30–95 Specification for Copper-Base Alloys in Ingot Form, **02.01**
B 31 Discontinued 1932; Specification for Copper-Base Alloys in Ingot Form for Sand Casting; Replaced by B 30
B 32–95b Specification for Solder Metal, **02.04**
B 33–94 Specification for Tinned Soft or Annealed Copper Wire for Electrical Purposes, **02.03**
B 34 Redesignated E 53
B 35 Discontinued 1942; Methods of Testing Chemical Analysis of Pig Lead; Replaced by E 37
B 36/B36M–95 Specification for Brass Plate, Sheet, Strip, and Rolled Bar, **02.01**
B 37–92 Specification for Aluminum for Use in Iron and Steel Manufacture, **02.02**
B 38 Discontinued 1942; Methods of Testing Chemical Analysis of Slab Zinc (Spelter); Replaced by E 40
B 39–79(1993) Specification for Nickel, **02.04**
B 40 Discontinued 1942; Photometric Methods for Chemical Analysis of Aluminum and Aluminum Base Alloys; Replaced by E 34
B 41 Discontinued 1942; Method for Testing Chemical Analysis of Nickel; Replaced by E 39
B 42–93 Specification for Seamless Copper Pipe, Standard Sizes, **02.01**
B 43–94 Specification for Seamless Red Brass Pipe, Standard Sizes, **02.01**
B 44 Discontinued 1937; Specification for Copper and Copper-Alloy Seamless Condenser Tubes and Ferrule Stock; Replaced by B 111
B 45 Discontinued 1942; Methods for Testing Chemical Analysis of Brasses
B 46 Discontinued 1943; Methods of Testing Chemical Analysis for sulfur in special brasses and bronzes; Replaced by E 54
B 47–95a Specification for Copper Trolley Wire, **02.03**
B 48–92 Specification for Soft Rectangular and Square Bare Copper Wire for Electrical Conductors, **02.03**
B 49–92 Specification for Copper Redraw Rod for Electrical Purposes, **02.01**
B 50 Discontinued 1937; Specification for Non-Ferrous Insect Screen Cloth
B 51 Discontinued 1945; Specification for Phospher Tin
B 52 Discontinued 1980; Specification for Phosphor Copper; Replaced by B 644
B 53 Discontinued 1980; Specification for Silicon Copper; Replaced by B 644
B 54 Discontinued 1941; Specification for High-Strength Yellow Brass (Manganese Bronze) and Leaded High-Strength Yellow Brass (Leaded Manganese Bronze) Sand Castings
B 55 Discontinued 1937; Specification for Seamless 70-30 Brass Condenser Tubes and Ferrule Stock
B 56 Discontinued 1937; Specification for Seamless Muntz Metal Condenser Tubes and Ferrule Stock; Replaced by B 111
B 57 Discontinued 1942; Specification for Copper-Alloy Condenser Tube Plates; Replaced by B 171
B 58 Discontinued 1946; Specification for Aluminum-Base Alloys in Ingot Form for Sand Castings; Replaced by B 179
B 59 Discontinued 1941; Specification for Aluminum-Bronze Sand Castings; Replaced by B 148
B 60 Discontinued 1944; Specification for Tin-Bronze and Leaded Tin-bronze Sand Castings; Replaced by B 143
B 61–93 Specification for Steam or Valve Bronze Castings, **02.01**
B 62–93 Specification for Composition Bronze or Ounce Metal Castings, **02.01**
B 63–90(1995)$^{\epsilon 1}$ Test Method for Resistivity of Metallically Conducting Resistance and Contact Materials, **03.04**
B 64 Discontinued 1952; Specification for Brazing Solder
B 65 Discontinued 1938; Specification for Lead Yellow Brass Sand Castings for General Purposes
B 66–95 Specification for Bronze Castings for Steam Locomotive Wearing Parts, **02.01**
B 67–93a Specification for Car and Tender Journal Bearings, Lined, **02.01**
B 68–95 Specification for Seamless Copper Tube, Bright Annealed, **02.01**
B 68M–95 Specification for Seamless Copper Tube, Bright Annealed [Metric], **02.01**
B 69–95a Specification for Rolled Zinc, **02.04**
B 70–90(1995)$^{\epsilon 1}$ Test Method for Change of Resistance With Temperature of Metallic Materials for Electrical Heating, **03.04**
B 71 Discontinued 1942; Methods of Testing Chemical Analysis of Nickel-Chromium and Nickel-Chromium-Iron Alloys
B 72 Discontinued 1977; Specification for Fire-Refined Casting Copper
B 73 Discontinued 1953; Specification for Silver Solders
B 74 Discontinued 1941; Specification for High-Leaded Tin-Bronze Sand Castings
B 75–95a Specification for Seamless Copper Tube, **02.01**
B 75M–95 Specification for Seamless Copper Tube [Metric], **02.01**
B 76–90(1995)$^{\epsilon 1}$ Test Method for Accelerated Life of Nickel-Chromium and Nickel-Chromium-Iron Alloys for Electrical Heating, **03.04**
B 77–81(1994)$^{\epsilon 1}$ Test Method for Thermoelectric Power of Electrical-Resistance Alloys, **03.04**
B 78–90(1995)$^{\epsilon 1}$ Test Method for Accelerated Life of Iron-Chromium-Aluminum Alloys for Electrical Heating, **03.04**
B 79 Discontinued 1946; Specification for Aluminum and Aluminum Alloy Sheet and Plate; Replaced by B 209
B 80–93 Specification for Magnesium-Alloy Sand Castings, **02.02**
B 81 Redesignated E 56
B 82 Discontinued 1959; Specification for Drawn or Rolled Alloy 80 Percent Nickel, 20 Percent Chromium, for Electrical-Heating Elements; Replaced by B 344
B 83 Discontinued 1959; Specification for Drawn or Rolled Alloy, 60 Percent Nickel, 16 Percent Chromium, and Balance Iron, for Electrical-Heating Elements; Replaced by B 344
B 84–90(1995)$^{\epsilon 1}$ Test Method for Temperature-Resistance Constants of Alloy Wires for Precision Resistors, **03.04**
B 85–95 Specification for Aluminum-Alloy Die Castings, **02.02**
B 86–95 Specification for Zinc-Alloy Die Castings, **02.04**
B 87 Discontinued 1938; Specification for Hard-Drawn Copper Transmission Cable; Replaced by B 8
B 88–5a Specification for Seamless Copper Water Tube, **02.01**
B 88M–95 Specification for Seamless Copper Water Tube [Metric], **02.01**
B 89 Discontinued 1946; Specification for Aluminum and Aluminum-Alloy Bars, Rods, and Wire; Replaced by B 211
B 90M Discontinued 1993; Specification for Magnesium-Alloy Sheet and Plate [Metric]; Replaced by B 90/B 90M
B 90/B90M–93 Specification for Magnesium-Alloy Sheet and Plate, **02.02**
B 91–92 Specification for Magnesium-Alloy Forgings, **02.02**
B 92M Discontinued 1990; Specification for Magnesium Ingot and Stick for Remelting [Metric]; Replaced by B 92/B 92M
B 92/B92M–89(1994)$^{\epsilon 1}$ Specification for Magnesium Ingot and Stick for Remelting, **02.02**
B 93M Discontinued 1990; Specification for Magnesium Alloys in Ingot Form for Sand Castings, Permanent Mold Castings, and Die Castings [Metric]; Replaced by B 93/B 93M
B 93/B93M–94b Specification for Magnesium Alloys in Ingot Form for Sand Castings, Permanent Mold Castings, and Die Castings, **02.02**
B 94–94 Specification for Magnesium-Alloy Die Castings, **02.02**
B 95 Discontinued 1985; Method of Testing Linear Expansion of Metals; Replaced by E 228
B 96–93 Specification for Copper-Silicon Alloy Plate, Sheet, Strip, and Rolled Bar for General Purposes and Pressure Vessels, **02.01**
B 96M–93a Specification for Copper-Silicon Alloy Plate, Sheet, Strip, and Rolled Bar for General Purposes and Pressure Vessels [Metric], **02.01**
B 97 Discontinued 1982; Specification for Copper-Silicon Alloy Plate, Sheet, Strip, and Rolled Bar for General Purposes; Combined with B 96
B 98–93 Specification for Copper-Silicon Alloy Rod, Bar, and Shapes, **02.01**

B 98M–93 Specification for Copper-Silicon Alloy Rod, Bar, and Shapes [Metric], **02.01**
B 99–93 Specification for Copper-Silicon Alloy Wire for General Applications, **02.01**
B 99M–94 Specification for Copper-Silicon Alloy Wire for General Applications [Metric], **02.01**
B 100–93 Specification for Wrought Copper-Alloy Bearing and Expansion Plates and Sheets for Bridge and Other Structural Use, **02.01**
B 101–92 Specification for Lead-Coated Copper Sheet and Strip for Building Construction, **02.01**
B 102–93 Specification for Lead and Tin Alloy Die Castings, **02.04**
B 103/B103M–93 Specification for Phosphor Bronze Plate, Sheet, Strip, and Rolled Bar, **02.01**
B 104 Discontinued 1937; Specification for Seamless Copper-Nickel Alloy Condenser Tubes and Ferrule Stock; Replaced by B 111
B 105–94 Specification for Hard-Drawn Copper Alloy Wires for Electric Conductors, **02.03**
B 106–90 Test Method for Flexivity of Thermostat Metals, **03.04**
B 107M Discontinued 1992; Specification for Magnesium-Alloy in Extended Bars, Rods, Shapes, Tubes and Wire [Metric]; Replaced by B 107/B 107M
B 107/B107M–94 Specification for Magnesium-Alloy Extruded Bars, Rods, Shapes, Tubes, and Wire, **02.02**
B 108–95 Specification for Aluminum-Alloy Permanent Mold Castings, **02.02**
B 109 Discontinued 1946; Specification for Aluminum and Aluminum Alloy Sheet and Plate; Replaced by B 209
B 110 Discontinued 1982; Method of Testing Dielectric Strength of Anodically Coated Aluminum
B 111–95 Specification for Copper and Copper-Alloy Seamless Condenser Tubes and Ferrule Stock, **02.01**
B 111M–93 Specification for Copper and Copper-Alloy Seamless Condenser Tubes and Ferrule Stock [Metric], **02.01**
B 112 Discontinued 1946; Specification for Aluminum-Base Alloys in Ingot Form for Sand Die Castings; Replaced by B 179
B 113 Redesignated F 113
B 114–90(1995)$^{\epsilon 1}$ Test Method for Temperature-Resistance Constants of Sheet Materials for Shunts and Precision Resistors, **03.04**
B 115–95 Specification for Electrolytic Cathode Copper, **02.01**
B 116–95 Specification for Figure-9 Deep-Section Grooved and Figure-8 Copper Trolley Wire for Industrial Haulage, **02.03**
B 117–95 Practice for Operating Salt Spray (Fog) Apparatus, **03.02**
B 118 Discontinued 1948; Specification for Nickel and Nickel-Alloy Wire and Ribbon for Electronic Tube Filaments
B 119 Discontinued 1976; Classification of Cast Copper-Base Alloys; Replaced by B 30, B 584
B 120 Discontinued 1940; Specification for Copper-Base Alloys in Ingot Form for Sand Casting; Replaced by B 30
B 121/B121M–95 Specification for Leaded Brass Plate, Sheet, Strip, and Rolled Bar, **02.01**
B 122/B122M–95 Specification for Copper-Nickel-Tin Alloy, Copper-Nickel-Zinc Alloy (Nickel Silver), and Copper-Nickel Alloy Plate, Sheet, Strip, and Rolled Bar, **02.01**
B 123 Discontinued—Replaced by B 30
B 124–94 Specification for Copper and Copper Alloy Forging Rod, Bar, and Shapes, **02.01**
B 124M–94 Specification for Copper and Copper Alloy Forging Rod, Bar, and Shapes [Metric], **02.01**
B 125 Discontinued 1946; Specification for Aluminum-Base Alloys in Ingot Form for Sand Castings, Die Castings, and Permanent Mold Castings; Replaced by B 179
B 126 Discontinued 1947; Specification for Aluminum-Manganese Alloy Sheet and Plate for Use in Welded Pressure Vessels; Replaced by B 209
B 127–93a Specification for Nickel-Copper Alloy (UNS N04400) Plate, Sheet, and Strip, **02.04**
B 128 Discontinued 1955; Methods of Testing Sleeves and Tubing for Radio Tube Cathodes
B 129–88 Specification for Cartridge Brass Cartridge Case Cups, **02.01**
B 130–95 Specification for Commercial Bronze Strip for Bullet Jackets, **02.01**
B 131–88 Specification for Copper Alloy Bullet Jacket Cups, **02.01**
B 132 Discontinued 1973; Specification for Leaded High-Strength Yellow Brass (Maganese Bronze) Sand Castings; Replaced by B 584
B 133 Discontinued 1994; Specification for Copper Rod, Bar, and Shapes; Replaced by B 187
B 133M Discontinued 1994; Specification for Copper Rod, Bar, and Shapes [Metric]; Replaced by B 187M
B 134–93 Specification for Brass Wire, **02.01**
B 135–95 Specification for Seamless Brass Tube, **02.01**
B 135M–95 Specification for Seamless Brass Tube [Metric], **02.01**
B 136–84(1993) Method for Measurement of Stain Resistance of Anodic Coatings on Aluminum, **02.05**
B 137–95 Test Method for Measurement of Coating Mass Per Unit Area of Anodically Coated Aluminum, **02.05**
B 138–92 Specification for Manganese Bronze Rod, Bar, and Shapes, **02.01**
B 138M–92 Specification for Manganese Bronze Rod, Bar, and Shapes [Metric], **02.01**
B 139–95 Specification for Phosphor Bronze Rod, Bar, and Shapes, **02.01**
B 139M–95 Specification for Phosphor Bronze Rod, Bar, and Shapes [Metric], **02.01**
B 140–92 Specification for Copper-Zinc-Lead (Leaded Red Brass or Hardware Bronze) Rod, Bar, and Shapes, **02.01**
B 140M–92 Specification for Copper-Zinc-Lead (Leaded Red Brass or Hardware Bronze) Rod, Bar, and Shapes [Metric], **02.01**
B 141 Discontinued 1967; Specification for Electrodeposited Coatings of Nickel and Chromium on Copper and Copper-Base Alloys; Replaced by B 456
B 142 Discontinued 1967; Specification for Electrodeposited Coatings of Nickel and Chromium on Zinc and Zinc-Base Alloys; Replaced by B 456
B 143 Discontinued 1973; Specification for Tin-Bronze and Leaded Tin-Bronze Sand Castings; Replaced by B 584
B 144 Discontinued 1973; Specification for High-Leaded Tin-Bronze Sand Castings; Replaced by B 584
B 145 Discontinued 1973; Specification for Leaded Red Brass and Leaded Semi-Red Brass Sand Castings; Replaced by B 584
B 146 Discontinued 1973; Specification for Leaded Yellow Brass Sand Castings for General Purposes; Replaced by B 584
B 147 Discontinued 1973; Specification for High-Strength Yellow Brass (Manganese Bronze) and Leaded High-Strength Yellow Brass (Leaded Manganese Bronze) Sand Castings; Replaced by B 584
B 148–93a Specification for Aluminum-Bronze Sand Castings, **02.01**
B 149 Discontinued 1973; Specification for Leaded Nickel-Brass (Leaded Nickel-Silver) and Leaded Nickel-Bronze (Leaded Nickel-silver); Replaced by B 584
B 150–95a Specification for Aluminum Bronze Rod, Bar, and Shapes, **02.01**
B 150M–95a Specification for Aluminum Bronze Rod, Bar, and Shapes [Metric], **02.01**
B 151–94 Specification for Copper-Nickel-Zinc Alloy (Nickel Silver) and Copper-Nickel Rod and Bar, **02.01**
B 151M–94 Specification for Copper-Nickel-Zinc Alloy (Nickel Silver) and Copper-Nickel Rod and Bar [Metric], **02.01**
B 152–94 Specification for Copper Sheet, Strip, Plate, and Rolled Bar, **02.01**
B 152M–95 Specification for Copper Sheet, Strip, Plate, and Rolled Bar [Metric], **02.01**
B 153–91 Test Method for Expansion (Pin Test) of Copper and Copper-Alloy Pipe and Tubing, **02.01**
B 154–95 Test Method for Mercurous Nitrate Test for Copper and Copper Alloys, **02.01**
B 155 Redesignated F 155
B 156 Discontinued 1948; Method of Testing Local Thickness of Electrodeposited Coatings; Replaced by F 219
B 157 Discontinued 1955; Methods of Testing Wire for Supports Used in Electronic Devices and Lamps
B 158 Discontinued 1942; Specification for Rope-Lay-Stranded Copper Conductors Having Bunch-Stranded Members for Electrical Conductors; Replaced by B 172, B 173, B 174
B 159–93 Specification for Phosphor Bronze Wire, **02.01**
B 159M–94 Specification for Phosphor Bronze Wire [Metric], **02.01**
B 160–93 Specification for Nickel Rod and Bar, **02.04**
B 161–93 Specification for Nickel Seamless Pipe and Tube, **02.04**
B 162–93a Specification for Nickel Plate, Sheet, and Strip, **02.04**
B 163–95a$^{\epsilon 1}$ Specification for Seamless Nickel and Nickel Alloy Condenser and Heat-Exchanger Tubes, **02.04**
B 164–93 Specification for Nickel-Copper Alloy Rod, Bar, and Wire, **02.04**
B 165–93 Specification for Nickel-Copper Alloy (UNS N04400) Seamless Pipe and Tube, **02.04**
B 166–95 Specification for Nickel-Chromium-Iron Alloys (UNS N06600, N06601, and N06690) and Nickel-Chromium-Cobalt-Molybdenum Alloy (UNS N06617) Rod, Bar, and Wire, **02.04**
B 167–94a Specification for Nickel-Chromium-Iron Alloy (UNS N06600, N06601, and N06690) Seamless Pipe and Tube, **02.04**
B 168–95a Specification for Nickel-Chromium-Iron Alloys (UNS N06600, N06601, and N06690) and Nickel-Chromium-Cobalt-Molybdenum Alloy (UNS N06617) Plate, Sheet, and Strip, **02.04**
B 169–95 Specification for Aluminum Bronze Sheet, Strip, and Rolled Bar, **02.01**
B 169M–88 Specification for Aluminum Bronze Plate, Sheet, Strip, and Rolled Bar [Metric], **02.01**
B 170–93 Specification for Oxygen-Free Electrolytic Copper—Refinery Shapes, **02.01**
B 171–95 Specification for Copper-Alloy Plate and Sheet for Pressure Vessels, Condensers, and Heat Exchangers, **02.01**
B 171M–91a$^{\epsilon 1}$ Specification for Copper-Alloy Plate and Sheet for Pressure Vessels, Condensers and Heat Exchangers [Metric], **02.01**
B 172–95 Specification for Rope-Lay-Stranded Copper Conductors Having Bunch-Stranded Members, for Electrical Conductors, **02.03**
B 173–95 Specification for Rope-Lay-Stranded Copper Conductors Having Concentric-Stranded Members, for Electrical Conductors, **02.03**
B 174–95 Specification for Bunch-Stranded Copper Conductors for Electrical Conductors, **02.03**
B 175 Discontinued 1955; Specification for Round Nickel Wire for Lamps and Electric Devices
B 176–95 Specification for Copper-Alloy Die Castings, **02.01**
B 177–93 Practice for Chromium Electroplating on Steel for Engineering Use, **02.05**
B 178 Discontinued 1957; Specification for Aluminum-Alloy Sheet and Plate for Pressure Vessel Application; Replaced by B 209
B 179–95a Specification for Aluminum Alloys in Ingot Form for Castings from All Casting Processes, **02.02**
B 180 Redesignated F 180
B 181 Discontinued 1970; Method of Testing Effect of Controlled Atmospheres Upon Alloys in Electric Furnaces
B 182 Discontinued 1982; Method for Life Test of Electrical Contact Materials

Penetration, for Use in Asphalt-Macadam Pavements

D 103 Discontinued 1940; Specification for Asphalt Cement, 100 to 120 Penetration, for Use in Asphalt-Macadam Pavements

D 104 Discontinued 1939; Specification for High Carbon Tar for Surface Treatment, Cold Application; Replaced by D 490

D 105 Discontinued 1939; Specification for Low-Carbon Tar for Surface Treatment, Cold Application; Replaced by D 490

D 106 Discontinued 1939; Specification for High Carbon Tar Cement for Use Cold in Repair Work (Cut-Back Product); Replaced by D 490

D 107 Discontinued 1939; Specification for Low Carbon Tar Cement, for Use Cold in Repair Work (Cut-Back Product); Replaced by D 490

D 108 Discontinued 1939; Specification for High Carbon Tar for Surface Treatment, Hot Application; Replaced by D 490

D 109 Discontinued 1939; Specification for Low Carbon Tar for Surface Treatment, Hot Application; Replaced by D 490

D 110 Discontinued 1939; Specification for High Carbon Tar Cement; Replaced by D 490

D 111 Discontinued 1939; Specification for Low Carbon Tar Cement; Replaced by D 490

D 112 Discontinued 1963; Specification for Coal-Tar Pitch for Stone Block Filler

D 113–86(1992) Test Method for Ductility of Bituminous Materials, **04.03**

D 114 Discontinued 1924; Method of Test for Water in Petroleum Products and Other Bituminous Materials; Replaced by D 95

D 115–93a Test Methods for Varnishes Used for Electrical Insulation, **10.01**

D 116–86(1994)$^{\epsilon 1}$ Test Methods for Vitrified Ceramic Materials for Electrical Applications, **15.02**

D 117–89 Guide to Test Methods and Specifications for Electrical Insulating Oils of Petroleum Origin, **10.03**

D 118 Discontinued 1963; Specification for 4-One, and Similar Type Boxes

D 119 Discontinued 1986; Specification for Low-Voltage Rubber Insulating Tape

D 120–95 Specification for Rubber Insulating Gloves, **10.03**

D 121–95 Terminology of Coal and Coke, **05.05**

D 122 Discontinued 1993; Tolerances for Tire Fabrics Other Than Tire Cord Fabrics

D 123–96 Terminology Relating to Textiles, **07.01**

D 124–88(1992)$^{\epsilon 1}$ Specification for Degummed Soybean Oil, **06.03**

D 125 Discontinued 1955; Specification for Perilla Oil, Raw or Refined

D 126–87 (1991)$^{\epsilon 1}$ Test Methods for Analysis of Yellow, Orange, and Green Pigments Containing Lead Chromate and Chromium Oxide Green, **06.03**

D 127–87(1993)$^{\epsilon 1}$ Test Method for Drop Melting Point of Petroleum Wax, Including Petrolatum, **05.01**

D 128–94a Test Methods for Analysis of Lubricating Grease, **05.01**

D 129–95 Test Method for Sulfur in Petroleum Products (General Bomb Method), **05.01**

D 130–94 Test Method for Detection of Copper Corrosion from Petroleum Products by the Copper Strip Tarnish Test, **05.01**

D 131 Discontinued 1963; Specification for Recent Granite Block for Pavements

D 132 Discontinued 1963; Specification for Granite Block for Purax Pavements

D 133 Discontinued 1940; Specification for Asphalt Cement, 10 to 15 Penetration, for the Manufacture of Asphalt Block

D 134 Discontinued 1940; Specification for Asphalt Cement, 15 to 25 Penetration, for the Manufacture of Asphalt Block

D 135 Discontinued 1940; Specification for Asphalt Cement, 120 to 150 Penetration, for Use in Asphalt-Macadam Pavements

D 136 Discontinued 1938; Method of Test for Amount of Material Finer than 200 Sieve in Aggregates; Replaced by C 117

D 137 Discontinued 1927; Method of Mechanical Analysis of Subgrade Soils

D 138 Redesignated C 143

D 139–95 Test Method for Float Test for Bituminous Materials, **04.03**

D 140–93 Practice for Sampling Bituminous Materials, **04.03**

D 141 Discontinued 1973; Method of Drop Shatter Test for Coke; Replaced by D 3038

D 142 Discontinued 1941; Definition of Terms Relating to Coal and Coke;Replaced by D 1212

D 143–94 Method of Testing Small Clear Specimens of Timber, **04.10**

D 144 Discontinued 1938; Specification for Asphalt for Damp-proofing and Waterproofing; Replaced by D 449

D 145 Discontinued 1938; Specification for Coal-Tar Pitch for Roofing, Damp-proofing and Waterproofing; Replaced by D 449

D 146–90 Test Methods for Sampling and Testing Bitumen-Saturated Felts and Fabrics Used in Roofing and Waterproofing, **04.04**

D 147 Discontinued 1985; Methods of Testing Bituminous Mastics

D 148 Discontinued 1924; Methods of Sampling Bituminous Materials Shipped in Barrels or Drums; Combined with D 449

D 149–95a Test Method for Dielectric Breakdown Voltage and Dielectric Strength of Solid Electrical Insulating Materials at Commercial Power Frequencies, **10.01**

D 150–95 Test Methods for A-C Loss Characteristics and Permittivity (Dielectric Constant) of Solid Electrical Insulating Materials, **10.01**

D 151 Discontinued 1940; Specification for Rubber Pump Valves

D 152 Discontinued 1931; Methods of Testing Cotton Fibers

D 153–84(1989)$^{\epsilon 1}$ Test Methods for Specific Gravity of Pigments, **06.03**

D 154–85(1989)$^{\epsilon 1}$ Guide for Testing Varnishes, **06.03**

D 155 Discontinued 1960; Method of Test for Color of Lubricating Oil and Petrolatum by Means of ASTM Union Colorimeter;Replaced by D 1500

D 156–94 Test Method for Saybolt Color of Petroleum Products (Saybolt Chromometer Method), **05.01**

D 157 Discontinued 1957; Method of Test for Steam Emulsion of Lubricating Oils; Replaced by D 1401

D 158 Discontinued 1963; Method of Test for Distillation of Gas Oil and Similar Distillate Fuel Oils; Replaced by D 86

D 159 Discontinued 1939; Specification for Crushed Stone and Crushed Slag for Bituminous Macadam Base and Surface Courses of Pavements; Replaced by D 693

D 160 Discontinued 1939; Specification for Crushed Stone, Crushed Slag, and Gravel for Bituminous Concrete Base and Surface Courses of Pavements; Replaced by D 692

D 161 Discontinued 1939; Specification for Crushed Stone, Crushed Slag, and Gravel for Bituminous Concrete Base and Surface Courses of Pavements; Replaced by D 692

D 162 Discontinued 1950; Specification for Fine Aggregate for Sheet Asphalt and Bituminous Concrete Pavements; Replaced by D 1073

D 163 Discontinued 1940; Specification for Asphalt Cement, 25 to 30 Penetration, for Use in Sheet Asphalt and Asphaltic-Concrete Pavements

D 164 Discontinued 1940; Specification for Asphalt Cement, 30 to 40 Penetration, for Use in Sheet Asphalt and Asphaltic-Concrete Pavements

D 165 Discontinued 1967; Method of Test for Proportion of Bitumen Soluble in Carbon Tetrachloride; Replaced by D 2042

D 166 Discontinued 1963; Specification for Gas and Coking Coals

D 167–93 Test Method for Apparent and True Specific Gravity And Porosity of Lump Coke, **05.05**

D 168–94 Test Method for Coke Residue of Creosote, **04.10**

D 169 Discontinued 1963; Specification for Asphalt Mastic for Use in Waterproofing (Asphalt Cement, Mineral Filler, Mineral Aggregate); Replaced by D 491

D 170 Discontinued 1977; Specification for Bituminous Grout for Use in Waterproofing Above Ground Level

D 171 Discontinued 1977; Specification for Bituminous Grout for Use in Waterproofing Below Ground Level

D 172 Discontinued 1926; Specification for Coal-Tar Saturated Roofing Melt for Use in Waterproofing and in Constructing Built Up Roofs; Replaced by D 226, D 227

D 173–95 Specification for Bitumen-Saturated Cotton Fabrics Used in Roofing and Waterproofing, **04.04**

D 174 Discontinued 1939; Specification for Burlap Saturated with Bituminous Substances for Use in Waterproofing

D 175 Discontinued 1929; Methods of Testing Electrical Insulating Materials for Voltage Effects at Radio Frequencies

D 176–91 Test Methods for Solid Filling and Treating Compounds Used for Electrical Insulation, **10.01**

D 177 Discontinued 1934; Methods of Testing Rubber Hose; Replaced by D 380

D 178–93 Specification for Rubber Insulating Matting, **10.03**

D 179 Discontinued 1975; Methods of Testing Cotton Tire Cords and Cord Fabrics Made from Cotton

D 180 Discontinued 1968; Methods of Testing Tolerances for Cotton Yarns; Replaced by D 2645

D 181 Discontinued 1976; Specification for Tolerances for Cotton Fabrics for Manufacture of Hose and Belts

D 182 Discontinued 1940; Specification for ASTM Thermometer; Replaced by E 1

D 183 Discontinued 1940; Specification for ASTM Thermometer; Replaced by E 1

D 184 Discontinued 1940; Specification for ASTM Thermometer; Replaced by E 1

D 185–84(1995)$^{\epsilon 1}$ Test Methods for Coarse Particles in Pigments, Pastes, and Paints, **06.03**

D 186 Discontinued 1940; Methods of Chemical Analysis of White Pigments; Combined with D 34

D 187–94 Test Method for Burning Quality of Kerosine, **05.01**

D 188 Discontinued 1943; Methods of Test for Neutralization of Acid And Base Members by Potentiometric Titration; Replaced by D 664, D 974

D 189–95 Test Method for Conradson Carbon Residue of Petroleum Products, **05.01**

D 190 Discontinued 1939; Specification for Crushed Stone, Crushed Slag, and Gravel for Water-Bound Macadam Base and Surface Courses of Pavements; Replaced by D 693

D 191 Discontinued 1939; Specification for Crushed Stone, Crushed Slag, and Gravel for Waterbound Macadam Base and Surface Courses of Pavements; Replaced by D 693

D 192 Discontinued 1943; Specification for Crushed Stone and Crushed Slag for Bituminous Macadam Base and Surface Courses of Pavements; Replaced by D 693

D 193 Discontinued 1939; Specification for Broken and Crushed Slag Stone for Bituminous Macadam Base and Surface Courses of Pavements; Replaced by D 693

D 194 Discontinued 1939; Specification for Crushed Stone and Crushed Slag for Bituminous Macadam Base and Surface Courses of Pavements; Replaced by D 693

D 195 Discontinued 1939; Specification for Crushed Stone and Crushed Slag for Bituminous Macadam Base and Surface Courses of Pavements; Replaced by D 693

D 196 Discontinued 1939; Specification for Crushed Stone, Crushed Slag, and Gravel for Bituminous Concrete Base and Surface Courses of Pavements; Replaced by D 692

D 197–87(1994) Test Method for Sampling and Fineness Test of Pulverized Coal, **05.05**

D 1536 Discontinued 1966; Method of Test for Color Difference Using the Colormaster Differential Calorimeter; Combined with D 2244
D 1537–60(1992)$^{\epsilon 1}$ Specification for Distilled Soybean Fatty Acids, **06.03**
D 1538–60(1992)$^{\epsilon 1}$ Specification for Distilled Linseed Fatty Acids, **06.03**
D 1539–60(1992)$^{\epsilon 1}$ Specification for Dehydrated Castor Acids, **06.03**
D 1540 Discontinued 1992; Practice for Effect of Chemical Agents on Organic Finishes Used in the Transportation Industry
D 1541–86(1995)$^{\epsilon 1}$ Test Method for Total Iodine Value of Drying Oils and Their Derivatives, **06.03**
D 1542–60(1993)$^{\epsilon 1}$ Test Method for Qualitative Detection of Rosin in Varnishes, **06.03**
D 1543 Discontinued 1992; Test Method for Color Permeance of White Architectural Enamels
D 1544–80(1989)$^{\epsilon 1}$ Test Method for Color of Transparent Liquids (Gardner Color Scale), **06.01**
D 1545–89(1993)$^{\epsilon 1}$ Test Method for Viscosity of Transparent Liquids by Bubble Time Method, **06.03**
D 1546–62(1993)$^{\epsilon 1}$ Method for Performance Tests of Clear Floor Sealers, **06.02**
D 1547 Discontinued 1990; Specification for Extruded Acrylic Plastic Sheet
D 1548–92 Test Method for Vanadium in Navy Special Fuel Oil, **05.01**
D 1549 Discontinued 1985; Method of Test for Zinc in Lubricating Oils and Additives (Polarographic Method)
D 1550–94 ASTM Butadiene Measurement Tables, **05.01**
D 1551 Discontinued 1977; Method of Test for Sulfur in Petroleum Oils (Quartz-Tube Method)
D 1552–95 Test Method for Sulfur in Petroleum Products (High-Temperature Method), **05.01**
D 1553 Discontinued 1991; Method for Analysis of Graphites Used as Lubricants
D 1554–86(1993) Terminology Relating to Wood-Base Fiber and Particle Panel Materials, **04.10**
D 1555–95 Test Method for Calculation of Volume and Weight of Industrial Aromatic Hydrocarbons, **06.04**
D 1555M–93 Test Method for Calculation of Volume and Weight of Industrial Aromatic Hydrocarbons [Metric], **06.04**
D 1556–90 Test Method for Density and Unit Weight of Soil in Place by the Sand-Cone Method, **04.08**
D 1557–91 Test Method for Laboratory Compaction Characteristics of Soil Using Modified Effort (56,000 ft-lbf/ft^3 (2,700 kN-m/m^3)), **04.08**
D 1558–94 Test Method for Moisture Content Penetration Resistance Relationships of Fine Grained Soils, **04.08**
D 1559–89 Test Method for Resistance to Plastic Flow of Bituminous Mixtures Using Marshall Apparatus, **04.03**
D 1560–92 Test Methods for Resistance to Deformation and Cohesion of Bituminous Mixtures by Means of Hveem Apparatus, **04.03**
D 1561–92 Practice for Preparation of Bituminous Mixture Test Specimens by Means of California Kneading Compactor, **04.03**
D 1562–82(1989)$^{\epsilon 1}$ Specification for Cellulose Propionate Molding and Extrusion Compounds, **08.01**
D 1563 Discontinued 1985; Method of Test for Peroxide Number of Mineral Insulating Oils
D 1564 Discontinued 1979; Testing Flexible Cellular Materials—Slab Urethane Foam; Replaced by D 3574
D 1565–81(1990) Specification for Flexible Cellular Materials—Vinyl Chloride Polymers and Copolymers (Open-Cell Foam), **08.01**
D 1566–95a Terminology Relating to Rubber, **09.01**
D 1567–89(1995) Test Method for Detergent Cleaners for Evaluation of Corrosive Effects on Certain Porcelain Enamels, **15.04**
D 1568–83(1991)$^{\epsilon 1}$ Test Methods for Sampling and Chemical Analysis of Alkylbenzene Sulfonates, **15.04**
D 1569–62(1991)$^{\epsilon 1}$ Test Methods for Detergent Alkylate, **15.04**
D 1570–95 Test Methods for Sampling and Chemical Analysis of Fatty Alkyl Sulfates, **15.04**
D 1571–95 Specification for Woven Asbestos Cloth, **04.05**
D 1572 Discontinued 1962; Specification and Methods of Test for Industrial Asbestos Tapes
D 1573–95 Test Method for Heat Aging of Asbestos Textiles, **04.05**
D 1574–87a(1995) Test Method for Extractable Matter in Wool, **07.01**
D 1575–90(1995) Test Method for Fiber Length of Wool in Scoured Wool and Card Sliver, **07.01**
D 1576–90(1995) Test Method for Moisture in Wool by Oven-Drying, **07.01**
D 1577–90 Test Methods for Linear Density of Textile Fibers, **07.01**
D 1578–93 Test Method for Breaking Strength of Skeins, **07.01**
D 1579–92 Test Method for Filler Content of Phenol, Resorcinol, and Melamine Adhesives, **15.06**
D 1580 Discontinued 1992; Specification for Liquid Adhesives for Automatic Machine Labeling of Glass Bottles
D 1581 Discontinued 1992; Test Method for Bonding Permanency of Water- or Solvent-Soluble Liquid Adhesives for Labeling Glass Bottles
D 1582–93 Test Method for Nonvolatile Content of Liquid Phenol, Resorcinol, and Melamine Adhesives, **15.06**
D 1583–95 Test Method for Hydrogen Ion Concentration of Dry Adhesive Films, **15.06**
D 1584 Discontinued 1992; Test Method for Water Absorptiveness of Paper Labels
D 1585–93 Test Methods for Fatty Acids Content of Naval Stores, Including Rosin, Tall Oil, And Related Products, **06.03**
D 1586–84(1992) Test Method for Penetration Test and Split-Barrel Sampling of Soils, **04.08**
D 1587–94 Practice for Thin-Walled Tube Geotechnical Sampling of Soils, **04.08**
D 1588 Discontinued 1984; Methods of Test for Dissolved and Gaseous Hydrogen in Water
D 1589 Discontinued 1981; Methods of Test for Dissolved Oxygen in Waste Water
D 1590 Discontinued 1995; Test Method for Surface Tension of Water
D 1591 Discontinued 1967; Method of Test for Effect of Water in Tubular Heat Exchangers
D 1592 Discontinued 1962; Specification for Glass Fabric Reinforced Epoxy Resin Laminates; Combined with D 709
D 1593–92 Specification for Nonrigid Vinyl Chloride Plastic Sheeting, **08.01**
D 1594 Discontinued 1961; Specification for Methylstyrene-Acrylonitrile Copolymer Molding and Extrusion Material
D 1595 Discontinued 1960; Specification for Polymethylstyrene Molding and Extrusion Material
D 1596–91 Test Method for Shock Absorbing Characteristics of Package Cushioning Materials, **15.09**
D 1597 Discontinued 1984; Method of Test for Melamine Content of Nitrogen Resins
D 1598–86 Test Method for Time-to-Failure of Plastic Pipe Under Constant Internal Pressure, **08.04**
D 1599–88 Test Method for Short-Time Hydraulic Failure Pressure of Plastic Pipe, Tubing, and Fittings, **08.04**
D 1600–95c Terminology for Abbreviated Terms Relating to Plastics, **08.01**
D 1601–86(1991) Test Method for Dilute Solution Viscosity of Ethylene Polymers, **08.01**
D 1602 Discontinued 1989; Test Method for Bearing Load of Corrugated Reinforced Plastics Panels
D 1603–94 Test Method for Carbon Black in Olefin Plastics, **08.01**
D 1604 Discontinued 1982; Method for Measurement of Flatness of Plasitcs Sheet or Tubing
D 1605 Discontinued 1992; Practices for Sampling Atmospheres for Analysis of Gases and Vapors
D 1606 Discontinued 1977; Method of Test for Inorganic Fluoride in the Atmosphere; Replaced by D 32666, D 3267, D 3268, D 3269, D 3270
D 1607–91(1995)$^{\epsilon 1}$ Test Method for Nitrogen Dioxide Content of the Atmosphere (Griess-Saltzman Reaction), **11.03**
D 1608–77(1994)$^{\epsilon 1}$ Test Method for Oxides of Nitrogen in Gaseous Combustion Products (Phenol-Disulfonic Acid Procedure), **11.03**
D 1609 Discontinued 1982; Method of Test for Oxidant Ozone Content of the Atmosphere
D 1610–91 Practice for Conditioning Leather and Leather Products for Testing, **15.04**
D 1611–81(1993)$^{\epsilon 1}$ Test Method for Corrosion Produced by Leather in Contact with Metal, **15.04**
D 1612–95 Test Method for Acetone in Methanol (Methyl Alcohol), **06.04**
D 1613–91 Test Method for Acidity in Volatile Solvents and Chemical Intermediates Used in Paint, Varnish, Lacquer, and Related Products, **06.04**
D 1614–91 Test Method for Alkalinity in Acetone, **06.04**
D 1615–60(1995)$^{\epsilon 1}$ Test Method for Glycerol, Ethylene Glycol, and Pentaerythritol in Alkyd Resins, **06.03**
D 1616 Discontinued 1982; Method of Test for Copper Corrosion by Mineral Spirits (Copper Strip Test); Replaced by D 130
D 1617–90 Test Method for Ester Value of Solvents and Thinners, **06.04**
D 1618–95a Test Method for Carbon Black Extractables—Toluene Discoloration, **09.01**
D 1619–94 Test Methods for Carbon Black—Sulfur Content, **09.01**
D 1620 Discontinued 1973; Method of Test for Volatile Content of Carbon Black
D 1621–94 Test Method for Compressive Properties of Rigid Cellular Plastics, **08.01**
D 1622–93 Test Method for Apparent Density of Rigid Cellular Plastics, **08.01**
D 1623–78(1995) Test Method for Tensile and Tensile Adhesion Properties of Rigid Cellular Plastics, **08.01**
D 1624–71(1993)$^{\epsilon 1}$ Specification for Acid Copper Chromate, **04.10**
D 1625–71(1993)$^{\epsilon 1}$ Specification for Chromated Copper Arsenate, **04.10**
D 1626 Discontinued 1970; Specification for Chromated Zinc Arsenate
D 1627–94 Test Methods for Chemical Analysis of Acid Copper Chromate, **04.10**
D 1628–94 Test Methods for Chemical Analysis of Chromated Copper Arsenate, **04.10**
D 1629 Discontinued 1970; Method for Chemical Analysis of Chromated Zinc Arsenate
D 1630–94 Test Method for Rubber Property—Abrasion Resistance (Footwear Abrader), **09.01**
D 1631–94 Test Method for Water in Phenol and Related Materials by the Iodine Reagent Method, **06.04**
D 1632–87 Practice for Making and Curing Soil-Cement Compression and Flexure Test Specimens in the Laboratory, **04.08**
D 1633–84(1990) Test Method for Compressive Strength of Molded Soil-Cement Cylinders, **04.08**
D 1634–95 Test Method for Compressive Strength of Soil-Cement Using Portions of Beams Broken in Flexure (Modified Cube Method), **04.08**
D 1635–95 Test Method for Flexural Strength of Soil-Cement Using Simple Beam with Third-Point Loading, **04.08**
D 1636–81(1992) Specification for Allyl Molding Compounds, **08.01**
D 1637 Discontinued 1990; Test Method for Tensile Heat Distortion Temperature of Plastic Sheeting

D 1638 Discontinued 1991; Methods of Testing Urethane Foam Isocyanate Raw Materials
D 1639–90 Test Method for Acid Value of Organic Coating Materials, **06.03**
D 1640–95 Test Methods for Drying, Curing, or Film Formation of Organic Coatings at Room Temperature, **06.03**
D 1641–59(1987) Test Method for Exterior Durability of Varnishes, **06.02**
D 1642–93 Test Methods for Elasticity or Toughness of Varnishes, **06.03**
D 1643 Discontinued 1993; Test Methods for Gas Checking and Draft Test of Varnish Films
D 1644–88(1993)$^{\epsilon 1}$ Test Methods for Nonvolatile Content of Varnishes, **06.01**
D 1645 Discontinued 1970; Method of Test for Print Resistance of Varnishes; Replaced by D 1640
D 1646–96 Test Methods for Rubber—Viscosity, Stress Relaxation, and Pre-Vulcanization Characteristics (Mooney Viscometer), **09.01**
D 1647–89 Test Methods for Resistance of Dried Films of Varnishes to Water and Alkali, **06.03**
D 1648–86(1993) Specification for Basic Lead Silicochromate Pigment, **06.03**
D 1649–95 Specification for Strontium Chromate Pigment, **06.03**
D 1650–91 Test Methods of Sampling and Testing Shellac Varnish, **06.03**
D 1651 Discontinued 1982; Method of Test for Phthalic Acid Isomers and Benzoic Acid in Alkyd Resins and Esters
D 1652–90 Test Methods for Epoxy Content of Epoxy Resins, **06.03**
D 1653–93 Test Methods for Water Vapor Transmission of Organic Coating Films, **06.01**
D 1654–92 Test Method for Evaluation of Painted or Coated Specimens Subjected to Corrosive Environments, **06.01**
D 1655–95a Specification for Aviation Turbine Fuels, **05.01**
D 1656 Discontinued 1969; Method of Test for Knock Characteristics of Motor Fuels Above 100 Octane Number by the Research Method; Replaced by D 2699
D 1657–89 Test Method for Density or Relative Density of Light Hydrocarbons by Pressure Thermohydrometer, **05.01**
D 1658 Discontinued 1984; Method of Test for Carbon Number Distribution of Aromatic Compounds in Naphthas by Mass Spectrometry
D 1659 Discontinued 1984; Method of Test for Maximum Fluidity Temperature of Residual Fuel Oil
D 1660 Discontinued 1992; Test Method for Thermal Stability of Aviation Turbine Fuels; Replaced by D 3241
D 1661 Discontinued 1990; Test Method for Thermal Stability of U. S. Navy Special Fuel Oil
D 1662–92 Test Method for Active Sulfur in Cutting Oils, **05.01**
D 1663 Discontinued 1976; Specification for Hot-Mixed, Hot-Laid Asphalt Paving Mixtures; Replaced by D 3515
D 1664 Discontinued 1992; Test Method for Coating and Stripping of Bitumen-Aggregate Mixtures
D 1665–91 Test Method for Engler Specific Viscosity of Tar Products, **04.03**
D 1666–87(1994) Methods for Conducting Machining Tests of Wood and Wood-Base Materials, **04.10**
D 1667–76(1990) Specification for Flexible Cellular Materials—Vinyl Chloride Polymers and Copolymers (Closed-Cell Form), **08.01**
D 1668–95 Specification for Glass Fabrics (Woven and Treated) for Roofing and Waterproofing, **04.04**
D 1669–89(1994)$^{\epsilon 1}$ Practice for Preparation of Test Panels for Accelerated and Outdoor Weathering of Bituminous Coatings, **04.04**
D 1670–90(1994)$^{\epsilon 1}$ Test Method for Failure End Point in Accelerated and Outdoor Weathering of Bituminous Materials, **04.04**
D 1671 Discontinued 1984; Method of Test for Absorbed Gamma Radiation Dose in the Fricke Dosimeter; Replaced by E 1026
D 1672 Discontinued 1984; Recommended Practices for Exposure of Polymeric Materials to High-Energy Radiation; Replaced by E 1027
D 1673–94 Test Methods for Relative Permittivity and Dissipation Factor of Expanded Cellular Plastics Used for Electrical Insulation, **10.01**
D 1674 Discontinued 1992; Methods of Testing Polymerizable Embedding Compounds Used for Electrical Insulation
D 1675–95 Test Methods for Polytetrafluoroethylene Tubing, **10.01**
D 1676–95 Test Methods for Film-Insulated Magnet Wire, **10.01**
D 1677–86(1993)$^{\epsilon 1}$ Methods for Sampling and Testing Untreated Mica Paper Used for Electrical Insulation, **10.01**
D 1678 Discontinued 1962; Methods of Testing Flexible Vinyl Plastic Coated Sleeving Used for Electrical Insulation
D 1679–90 Specification for Synthetic Rubber Heat- and Moisture-Resisting Insulation for Wire and Cable, 75°C Operation, **10.01**
D 1680 Discontinued 1989; Methods of Testing Rubber Hose for Automotive Air Conditioning Systems
D 1681–92 Test Method for Synthetic Anionic Active Ingredient in Detergents by Cationic Titration Procedure, **15.04**
D 1682 Discontinued 1992; Test Methods for Breaking Load and Elongation of Textile Fabric; Replaced by D 5034 and D 5035
D 1683–90a Test Method for Failure in Sewn Seams of Woven Fabrics, **07.01**
D 1684–90 Practice for Lighting Cotton Classing Rooms for Color Grading, **07.01**
D 1685–95 Test Method for Traces of Thiophene in Benzene by Spectrophotometry, **06.04**
D 1686–95 Test Method for Color of Solid Aromatic Hydrocarbons and Related Materials in the Molten State (Platinum-Cobalt Scale), **06.04**
D 1687–92 Test Methods for Chromium in Water, **11.01**
D 1688–95 Test Methods for Copper in Water, **11.01**
D 1689 Discontinued 1964; Method of Test for Silica in High-Purity Water; Combined with D 859
D 1690 Discontinued 1981; Test for Gamma Radioactivity of Water
D 1691–95 Test Methods for Zinc in Water, **11.01**
D 1692 Discontinued 1978; Method of Test for Rate of Burning or Extent and Time of Burning of Cellular Plastics Using a Specimen Supported by a Horizontal Screen
D 1693–95 Test Method for Environmental Stress-Cracking of Ethylene Plastics, **08.01**
D 1694–95 Specification for Threads 60 ° (Stub) for "Fiberglass" (Glass-Fiber-Reinforced Thermosetting-Resin) Pipe, **08.04**
D 1695–77(1989)$^{\epsilon 1}$ Terminology of Cellulose and Cellulose Derivatives, **06.03**
D 1696–95 Test Method for Solubility of Cellulose in Sodium Hydroxide, **06.03**
D 1697 Discontinued 1974; Method of sampling casein and similar protein materials
D 1698–84(1990)$^{\epsilon 1}$ Test Method for Sediments and Soluble Sludge in Service-Aged Insulating Oils, **10.03**
D 1699 Discontinued 1967; Method of Test for Bond Strength of Leather Belting
D 1700 Discontinued 1963; Specification for Low Voltage Rubber Insulating Gloves; Combined with D 120
D 1701–95 Test Methods for Scavenger Content of Askarels, **10.03**
D 1702 Discontinued 1991; Method for Visual Examination of Used Chlorinated Aromatic Hydrocarbons (Askarels) in the Field
D 1703 Discontinued 1982; Recommended Practice for Presentation of Capillary Flow Data on Molten Thermoplastics; Replaced by D 3805
D 1704–95 Test Method for Determining the Amount of Particulate Matter in the Atmosphere by Measurement of the Light Absorpbance of a Filter Sample, **11.03**
D 1704M–95 Test Method for Determining the Amount of Particulate Matter in the Atmosphere by Measurement of the Light Absorpbance of a Filter Sample [Metric], **11.03**
D 1705–92 Test Method for Particle Size Analysis of Powdered Polymers and Copolymers of Vinyl Chloride, **08.01**
D 1706 Discontinued 1967; Method of Test for Indentation Hardness of Plastics by Means of a Durometer
D 1707 Discontinued 1967; Definition of Terms Relating to Soil Dynamics; Combined with D 653
D 1708–95 Test Method for Tensile Properties of Plastics by Use of Microtensile Specimens, **08.01**
D 1709–91 Test Methods for Impact Resistance of Plastic Film by the Free-Falling Dart Method, **08.01**
D 1710–91a Specification for Polytetrafluoroethylene (PTFE) Basic Shapes, Rod, and Heavy-Walled Tubing, **08.01**
D 1711–95 Terminology Relating to Electrical Insulation, **10.01**
D 1712–89 Practice for Resistance of Plastics to Sulfide Staining, **08.01**
D 1713 Discontinued 1992; Test Method for Bonding Permanency of Water- or Solvent-Soluble Liquid Adhesives for Automatic Machine Sealing Top Flaps of Fiberboard Specimens
D 1714 Discontinued 1992; Test Method for Water Absorptiveness of Fiberboard Specimens for Adhesives
D 1715 Discontinued 1968; Method of Test for Gas Evolved from Chemical Blowing Agents for Cellular Plastics
D 1716 Discontinued 1993; Test Method for Cellulose Chain Length Uniformity by Fractional Precipitation of Cellulose Nitrate
D 1717 Discontinued 1984; Method of Test for Analysis of Commerical Butane-Butene Mixtures and Isolutylene by Gas Chromatography
D 1718–90(1994)$^{\epsilon 1}$ Specification for Isobutyl Acetate (95 Percent Grade), **06.04**
D 1719–95 Specification for Isobutyl Alcohol, **06.04**
D 1720–93 Test Method for Dilution Ratio of Active Solvents in Cellulose Nitrate Solutions, **06.04**
D 1721–93 Test Method for Permanganate Time of Tricresyl Phosphate, **06.04**
D 1722–90(1994) Test Method for Water Miscibility of Water-Soluble Solvents, **06.04**
D 1723 Discontinued 1966; Method of Test for Water Solubility of Acetone; Combined with D 1722
D 1724 Discontinued 1978; Method for Qualitative Determination of Fish Oil in Drying Oils and Drying Oil Fatty Acids; Replaced by D 555, D 3725
D 1725–62(1989)$^{\epsilon 1}$ Test Method for Viscosity of Resin Solutions, **06.03**
D 1726–90 Test Method for Hydrolyzable Chlorine Content of Liquid Epoxy Resins, **06.03**
D 1727 Discontinued 1984; Method of Test for Urea Content of Nitrogen Resins
D 1728 Discontinued 1991; Test Method for Phthalate Ester Color of High-Gravity Glycerin
D 1729–89 Practice for Visual Evaluation of Color Differences of Opaque Materials, **06.01**
D 1730–67(1993) Practices for Preparation of Aluminum and Aluminum-Alloy Surfaces for Painting, **02.05**
D 1731–67(1993) Practices for Preparation of Hot-Dip Aluminum Surfaces for Painting, **02.05**
D 1732–67(1993) Practices for Preparation of Magnesium Alloy Surfaces for Painting, **02.05**
D 1733 Discontinued 1980; Method for Preparation of Aluminum Alloy Panels for Testing Paint, Varnish, Lacquer, and Related Products; Replaced by D 1730

D 2909 Discontinued 1990; Test Method for Cyclohexylamine in Water; Replaced by D 4983
D 2910 Discontinued 1992; Method for the Removal of Organic Matter from Water by Activated Carbon Absorption
D 2911–94 Specification for Dimensions and Tolerances for Plastic Bottles, **08.02**
D 2912 Discontinued 1991; Test Method for Oxidant Content of the Atmosphere (Neutral KI)
D 2913–96 Test Method for Mercaptan Content of the Atmosphere, **11.03**
D 2914–95 Test Methods for Sulfur Dioxide Content of the Atmosphere (West-Gaeke Method), **11.03**
D 2915–94 Practice for Evaluating Allowable Properties for Grades of Structural Lumber, **04.10**
D 2916–88(1993)$^{\epsilon 1}$ Specification for Isophorone, **06.04**
D 2917–91(1994) Specification for Methyl Isoamyl Ketone, **06.04**
D 2918–93 Practice for Durability Assessment of Adhesive Joints Stressed in Peel, **15.06**
D 2919–95 Test Method for Determining Durability of Adhesive Joints Stressed in Shear by Tension Loading, **15.06**
D 2920 Discontinued 1977; Method for Determination of Silica in Titanium Dioxide Pigments; Replaced by D 1394
D 2921–88(1993)$^{\epsilon 1}$ Test Method for Qualitative Tests for the Presence of Water Repellents and Preservatives in Wood Products, **06.02**
D 2922–91 Test Methods for Density of Soil and Soil-Aggregate in Place by Nuclear Methods (Shallow Depth), **04.08**
D 2923–95 Test Method for Rigidity of Polyolefin Film and Sheeting, **08.02**
D 2924–93 Test Method for External Pressure Resistance of "Fiberglass" (Glass-Fiber-Reinforced Thermosetting-Resin) Pipe, **08.04**
D 2925–95 Test Method for Beam Deflection of "Fiberglass" (Glass-Fiber-Reinforced Thermosetting Resin) Pipe Under Full Bore Flow, **08.04**
D 2926 Discontinued 1989; Test Method for Bulk Modulus of Elasticity of Syntactic Foam (Piston-Cylinder Method)
D 2927 Discontinued 1974; Method of Test for Measurement of Tensile Creep and Creep Rupture of Reinforced Thermoplastics; Replaced by D 2990
D 2928 Discontinued 1981; Method for Sampling Stacks for Particulate Matter; Replaced by D 3685
D 2929–89(1995)$^{\epsilon 1}$ Test Method for Sulfur Content of Cellulosic Materials by X-Ray Fluorescence, **06.03**
D 2930–94 Test Method for Maleic Acid in Maleic Anhydride by Potentiometric Titration, **06.04**
D 2931 Discontinued 1994; Guide for Testing Latex Flat Wall Paints; Replaced by D 5324
D 2932 Discontinued 1993; Guide for Testing Exterior Solvent-Based House and Trim Coatings; Replaced by D 5416
D 2933 Discontinued 1992; Test Method for Corrosion Resistance of Coated Steel Specimens (Cyclic Method)
D 2934 Discontinued 1993; Practice for Rubber Seals—Compatibility with Service Fluids
D 2935–91 Test Method for Apparent Density of Industrial Aromatic Hydrocarbons, **06.04**
D 2936–95 Test Method for Direct Tensile Strength of Intact Rock Core Specimens, **04.08**
D 2937–94 Test Method for Density of Soil in Place by the Drive-Cylinder Method, **04.08**
D 2938–95 Test Method for Unconfined Compressive Strength of Intact Rock Core Specimens, **04.08**
D 2939–94 Test Methods for Emulsified Bitumens Used as Protective Coatings, **04.04**
D 2940–92 Specification for Graded Aggregate Material For Bases or Subbases for Highways or Airports, **04.03**
D 2941–73(1993)$^{\epsilon 1}$ Test Method for Measuring Break Pattern of Leather (Break Scale), **15.04**
D 2942–92 Test Method for Total Acid Acceptance of Halogenated Organic Solvents (Nonreflux Methods), **15.05**
D 2943–92 Test Method for Aluminum Scratch of 1,1,1-Trichloroethane, **15.05**
D 2944–71(1990)$^{\epsilon 1}$ Test Method of Sampling Processed Peat Materials, **04.08**
D 2945–90(1994) Test Method for Gas Content of Insulating Oils, **10.03**
D 2946–91 Terminology Relating to Asbestos, **04.05**
D 2947–88(1993)$^{\epsilon 1}$ Test Method for Screen Analysis of Asbestos Fibers, **04.05**
D 2948 Discontinued 1986; Specification for Glass-Reinforced and Glass-Filled Acetal Resin Molding and Extrusion Materials; Replaced by D 4181
D 2949–95 Specification for 3.25-in. Outside Diameter Poly(Vinyl Chloride) (PVC) Plastic Drain, Waste, and Vent Pipe and Fittings, **08.04**
D 2950–91 Test Method for Density of Bituminous Concrete in Place by Nuclear Method, **04.03**
D 2951–95 Test Method for Resistance of Types III and IV Polyethylene Plastics to Thermal Stress-Cracking, **08.02**
D 2952–95 Specification for Ethylene Plastics, **08.02**
D 2953 Discontinued 1986; Classification System for Polymeric Materials for Service in Ionizing Radiation
D 2954 Discontinued 1985; Method of Test for Absorbed Gamma and Electron Radiation Dose with the Ferrous Sulfate-Cupric Sulfate Dosimeter
D 2955–74(1995) Specification for Hand Scrubbing Soap (Grit Soap) Paste and Bar, **15.04**
D 2956 Discontinued 1985; Practice for Conducting Controlled Shock Input Tests for Shipping Containers; Replaced by D 4003
D 2957–74(1995) Specification for Hand Scrubbing Soap (Grit Soap) Powder, **15.04**
D 2958–74(1995) Specification for Powdered Toilet Soap, **15.04**
D 2959–89(1995) Test Method for Ethylene Oxide Content of Polyethoxylated Nonionic Surfactants, **15.04**
D 2960–89 Test Method of Controlled Laundering Test Using Naturally Soiled Fabrics and Household Appliances, **15.04**
D 2961–95a Test Method for Total Moisture in Coal Reduced to 2.36–mm (No. 8) Mesh Top Sieve Size (Limited Purpose Method), **05.05**
D 2962–71(1991)$^{\epsilon 1}$ Method for Calculating Volume-Temperature Correction for Coal-Tar Pitches, **04.04**
D 2963–78(1995) Test Method for Testing Flow Table Consistency of Clay-Stabilized Asphalt Emulsions, **04.04**
D 2964 Discontinued 1979; Specification for Natural Mica Films Used in Fixed Capacitors Based on Visual Quality
D 2965 Discontinued 1979; Specification for Mechanical Characteristics of Die Cut Mica Films for Use as Dielectrics in Fixed Mica Capacitors
D 2966 Discontinued 1983; Method of Test for Cavitation Erosion-Corrosion Characteristics of Aluminum in Engine Coolants Using Ultrasonic Energy
D 2967–91(1995) Test Method for Edge Coverage of Coating Powders, **10.02**
D 2968–95 Test Method for Med and Kemp Fibers in Wool and Other Animal Fibers by Microprojection, **07.01**
D 2969–92 Test Methods for Steel Tire Cords, **07.01**
D 2970–95 Test Methods for Tire Cords, Tire Cord Fabrics, and Industrial Yarns Made From Glass Filaments, **07.01**
D 2970M–95 Test Methods for Tire Cords, Tire Cord Fabrics, and Industrial Yarns Made From Glass Filaments [Metric], **07.01**
D 2971 Discontinued 1978; Methods of Testing for Stitch-Quilted Products
D 2972–93 Test Methods for Arsenic in Water, **11.01**
D 2973–71(1990) Test Method for Total Nitrogen in Peat Materials, **04.08**
D 2974–87(1995) Test Methods for Moisture, Ash, and Organic Matter of Peat and Other Organic Soils, **04.08**
D 2975 Discontinued 1984; Method of Test for Sand Content of Peat Materials
D 2976–71(1990) Test Method for pH of Peat Materials, **04.08**
D 2977–71(1990) Test Method for Particle Size Range of Peat Materials for Horticultural Purposes, **04.08**
D 2978–71(1990) Test Method for Volume of Processed Peat Materials, **04.08**
D 2979–95 Test Method for Pressure-Sensitive Tack of Adhesives Using an Inverted Probe Machine, **15.06**
D 2980–71(1990) Test Method for Volume Weights, Water-Holding Capacity, and Air Capacity of Water-Saturated Peat Materials, **04.08**
D 2981–94 Test Method for Wear Life of Solid Film Lubricants in Oscillating Motion, **05.02**
D 2982–93 Test Methods for Detecting Glycol-Base Antifreeze in Used Lubricating Oils, **05.02**
D 2983–87(1993) Test Method for Low-Temperature Viscosity of Automotive Fluid Lubricants Measured by Brookfield Viscometer, **05.02**
D 2984 Discontinued 1981; Practice for Validation of Results of Process Vapor Pressure Analyzer; Replaced by D 3764
D 2985–92 Test Method for Color of Asbestos, **04.05**
D 2986–95a Practice for Evaluation of Air Assay Media by the Monodisperse DOP (Dioctyl Phthalate) Smoke Test, **11.03**
D 2987–88(1993)$^{\epsilon 1}$ Test Method for Moisture Content of Asbestos Fiber, **04.05**
D 2988–92 Test Method for Water-Soluble Halide Ion in Halogenated Organic Solvents and Their Admixtures, **15.05**
D 2989–93 Test Method for Acidity-Alkalinity of Halogenated Organic Solvents and Their Admixtures, **15.05**
D 2990–95 Test Methods for Tensile, Compressive, and Flexural Creep and Creep-Rupture of Plastics, **08.02**
D 2991 Discontinued 1992; Practice for Testing Stress-Relaxation of Plastics
D 2992–91 Practice for Obtaining Hydrostatic or Pressure Design Basis for "Fiberglass" (Glass-Fiber-Reinforced Thermosetting-Resin) Pipe and Fittings, **08.04**
D 2993–83(1991) Specification for Acrylonitrile-Butadiene Rubberized Tar, **04.03**
D 2994–87(1991) Test Methods for Rubberized Tar, **04.03**
D 2995–93 Practice for Determining Application Rate of Bituminous Distributors, **04.03**
D 2996–95 Specification for Filament-Wound "Fiberglass" (Glass-Fiber-Reinforced Thermosetting-Resin) Pipe, **08.04**
D 2997–95 Specification for Centrifugally Cast "Fiberglass" (Glass-Fiber-Reinforced-Thermosetting-Resin) Pipe, **08.04**
D 2998–89 Test Method for Polyhydric Alcohols in Alkyd Resins, **06.03**
D 2999 Discontinued 1990; Test Method for Monopentaerythritol in Commercial Pentaerythritol; Replaced by D 2195
D 3000–95 Specification for Polybutylene (PB) Plastic Pipe (SDR-PR) Based on Outside Diameter, **08.04**
D 3001 Discontinued 1985; Method of Test for Absorbed Gamma And Electron Radiation Dose with the Ceric Sulfate Dosimeter
D 3002–94 Practice for Evaluation of Coatings for Plastics, **06.02**
D 3003–94 Test Method for Pressure Mottling and Blocking Resistance of Organic Coatings on Metal Substrates, **06.02**
D 3004–89 Specification for Extruded Thermosetting and Thermoplastic Semi-Conducting Conductor and Insulation Shields, **10.02**
D 3005–88(1993)$^{\epsilon 1}$ Specification for Low-Temperature Resistant Vinyl Chloride Plastic Pressure-Sensitive Electrical Insulating Tape, **10.02**

Procedures for Bituminous Materials (Xenon-Arc Method), **04.04**
D 4799–93 Test Method for Accelerated Weathering Test Conditions and Procedures for Bituminous Materials (Fluorescent UV and Condensation Method), **04.04**
D 4800–94 Guide for Classifying and Specifying Adhesives, **15.06**
D 4801–95 Specification for Polyethylene Sheeting in Thickness of 0.25 mm (0.010 in.) and Greater, **08.03**
D 4802–94 Specification for Poly(Methyl Methacrylate) Acrylic Plastic Sheet, **08.03**
D 4803–93 Test Method for Predicting Heat Buildup in PVC Building Products, **08.04**
D 4804–91 Test Methods for Determining the Flammability Characteristics of Nonrigid Solid Plastics, **08.03**
D 4805–88(1994)$^{\epsilon 1}$ Terminology for Plastics Standards, **08.03**
D 4806–95a Specification for Denatured Fuel Ethanol for Blending with Gasolines for Use as Automotive Spark-Ignition Engine Fuel, **05.03**
D 4807–88(1995)$^{\epsilon 1}$ Test Method for Sediment in Crude Oil by Membrane Filtration, **05.03**
D 4808–92 Test Method for Hydrogen Content of Light Distillates, Middle Distillates, Gas Oils, and Residua by Low Resolution Nuclear Magnetic Resonance Spectroscopy, **05.03**
D 4809–95 Test Method for Heat of Combustion of Liquid Hydrocarbon Fuels by Bomb Calorimeter (Intermediate Precision Method), **05.03**
D 4810–88(1994)$^{\epsilon 1}$ Test Method for Hydrogen Sulfide in Natural Gas Using Length-of-Stain Detector Tubes, **05.05**
D 4811–90 Specification for Nonvulcanized Rubber Sheet Used as Roof Flashing, **04.04**
D 4812–93 Test Method for Unnotched Cantilever Beam Impact Strength of Plastics, **08.03**
D 4814–95b Specification for Automotive Spark-Ignition Engine Fuel, **05.03**
D 4815–94a Test Method for Determination of MTBE, ETBE, TAME, DIPE, *tertiary*-Amyl Alcohol and C_1 to C_4 Alcohols in Gasoline by Gas Chromatography, **05.03**
D 4816–94 Test Method for Specific Heat of Aircraft Turbine Fuels by Thermal Analysis, **05.03**
D 4817–88(1994) Classification for Rubber Compounding Materials—Stearic Acid, **09.01**
D 4818–89(1994) Classification for Rubber Compounding Materials—Vulcanization Accelerators, **09.01**
D 4819–88 Specification for Flexible Cellular Materials Made from Polyolefin Plastics, **08.03**
D 4820–95 Test Methods for Carbon Black—Surface Area by Multipoint B. E. T. Nitrogen Adsorption, **09.01**
D 4821–95a Guide for Carbon Black—Validation of Test Method Precision and Bias, **09.01**
D 4822–88(1994)$^{\epsilon 1}$ Guide for Selection of Methods of Particle Size Analysis of Fluvial Sediments (Manual Methods), **11.02**
D 4823–95 Guide for Core-Sampling Submerged, Unconsolidated Sediments, **11.02**
D 4824–94 Test Method for Determination of Catalyst Acidity by Ammonia Chemisorption, **05.03**
D 4825–92 Test Method for Measurement of Curl in Cut-Sized Office Paper, **15.09**
D 4826–88(1993)$^{\epsilon 1}$ Practice for Units of Measurement and Conversion Factors for Pulp, Paper, and Paperboard, **15.09**
D 4827–93 Test Method for Determining the Unreacted Monomer Content of Latexes Using Capillary Column Gas Chromatography, **06.01**
D 4828–94 Test Method for Practical Washability of Organic Coatings, **06.02**
D 4829–95 Test Method for Expansion Index of Soils, **04.08**
D 4830–95 Test Methods for Characterizing Thermoplastic Fabrics Used in Roofing and Waterproofing, **04.04**
D 4831–88(1994)$^{\epsilon 1}$ Test Method for Buckle Tear Strength of Leather, **15.04**
D 4832–88 Test Method for Preparation and Testing of Soil-Cement Slurry Test Cylinders, **04.08**
D 4833–88 Test Method for Index Puncture Resistance of Geotextiles, Geomembranes, and Related Products, **04.09**
D 4834–88(1993)$^{\epsilon 1}$ Test Method for Detection of Lead in Paint by Direct Aspiration Atomic Absorption Spectroscopy, **06.01**
D 4835–93 Specification for Propylene Glycol Monomethyl Ether Acetate, **06.04**
D 4836–95 Specification for Dipropylene Glycol Monomethyl Ether, **06.04**
D 4837–93 Specification for Propylene Glycol Monomethyl Ether, **06.04**
D 4838–88(1993) Test Method for Determining the Relative Tinting Strength of Chromatic Paints, **06.02**
D 4839–94 Test Method for Total Carbon and Organic Carbon in Water by Ultraviolet, or Persulfate Oxidation, or Both, and Infrared Detection, **11.02**
D 4840–88(1993)$^{\epsilon 1}$ Practice for Sampling Chain of Custody Procedures, **11.01**
D 4841–88(1993)$^{\epsilon 1}$ Practice for Estimation of Holding Time for Water Samples Containing Organic and Inorganic Constituents, **11.01**
D 4842–90 Test Method for Determining the Resistance of Solid Wastes to Freezing and Thawing, **11.04**
D 4843–88(1994) Test Method for Wetting and Drying Test of Solid Wastes, **11.04**
D 4844–88(1993) Guide for Air Monitoring at Waste Management Facilities for Worker Protection, **11.04**
D 4845–95 Terminology Relating to Wool, **07.02**
D 4846–88 Test Method for Resistance to Unsnapping of Snap Fasteners, **07.02**
D 4847–95a Specification for Woven Awning and Canopy Fabrics, **07.02**
D 4848–95a Terminology of Force, Deformation and Related Properties of Textiles, **07.02**
D 4849 Discontinued 1993; Terminology Relating to Yarn
D 4850–91 Terminology Relating to Fabric, **07.02**
D 4851–88 Test Methods for Coated and Laminated Fabrics for Architectural Use, **07.02**
D 4852–88(1994) Practice for Evaluation of Attached Upholstery Fabrics, **07.02**
D 4853–91 Guide for Reducing Test Variability, **07.02**
D 4854–95 Guide for Estimating the Magnitude of Variability from Expected Sources in Sampling Plans, **07.02**
D 4855–91 Practices for Comparing Test Methods, **07.02**
D 4856–88(1993)$^{\epsilon 1}$ Test Method for Determination of Sulfuric Acid Mist in the Workplace Atmosphere (Ion Chromatographic), **11.03**
D 4857–95 Test Method for Determination of the Ability of Lubricants to Minimize Ring Sticking and Piston Deposits in Two-Stroke-Cycle Gasoline Engines Other Than Outboards, **05.03**
D 4858–95 Test Method for Determination of the Tendency of Lubricants to Promote Preignition in Two-Stroke-Cycle Gasoline Engines, **05.03**
D 4859–88(1994)$^{\epsilon 1}$ Specification for Lubricants for Two-Stroke-Cycle Spark-Ignition Gasoline Engines–TC, **05.03**
D 4860–91(1995) Test Method for Free Water and Particulate Contamination in Mid-Distillate Fuels (Clear and Bright Numerical Rating), **05.03**
D 4861–94a Practice for Sampling and Selection of Analtyical Techniques for Pesticides and Polychlorinated Biphenyls in Air, **11.03**
D 4862 Discontinued 1995; Test Method for Evaluating Hydraulic Transmission Fluid Antiwear Properties
D 4863–95 Test Method for Determination of Lubricity of Two-Stroke Gasoline Engine Lubricants, **05.03**
D 4864–90 Test Method for Determination of Traces of Methanol in Propylene Concentrates by Gas Chromatography, **05.03**
D 4865–91 Guide for Generation and Dissipation of Static Electricity in Petroleum Fuel Systems, **05.03**
D 4866–88 Performance Specification for Coal Tar Pitch Emulsion Pavement Sealer Mix Formulations Containing Mineral Aggregates and Optional Polymeric Admixtures, **04.04**
D 4867–88$^{\epsilon 1}$ Test Method for Effect of Moisture on Asphalt Concrete Paving Mixtures, **04.03**
D 4868–90 Test Method for Estimation of Net and Gross Heat of Combustion of Petroleum Fuels, **05.03**
D 4869–88(1993)$^{\epsilon 1}$ Specification for Asphalt-Saturated Organic Felt Shingle Underlayment Used in Roofing, **04.04**
D 4870–94 Test Method for Total Sediment in Residual Fuels, **05.03**
D 4871–88 Guide for Universal Oxidation/Thermal Stability Test Apparatus, **05.03**
D 4872–94 Test Method for Dielectric Testing of Wire and Cable Filling Compounds, **10.02**
D 4873–95 Guide for Identification, Storage, and Handling of Geotextiles, **04.09**
D 4874–95 Test Method for Leaching Solid Waste in a Column Apparatus, **11.04**
D 4875–94 Test Methods of Polyurethane Raw Materials: Determination of the Polymerized Ethylene Oxide Content of Polyether Polyols, **08.03**
D 4876–93 Test Method for Polyurethane Raw Materials: Determination of Acidity of Crude or Modified Isocyanates, **08.03**
D 4877–93 Test Method for Polyurethane Raw Materials: Determination of Apha Color In Isocyanates, **08.03**
D 4878–93 Test Methods for Polyurethane Raw Materials: Determination of Viscosity of Polyols, **08.03**
D 4879–89 Guide for Geotechnical Mapping of Large Underground Openings in Rock, **04.08**
D 4880–94 Test Method for Salt Water Proofness of Insulating Varnishes Over Enamelled Magnet Wire, **10.02**
D 4881–93 Test Method for Thermal Endurance of Varnished Fibrous- or Film-Wrapped Magnet Wire, **10.02**
D 4882–93 Test Method for Bond Strength of Electrical Insulating Varnishes by the Twisted Coil Test, **10.02**
D 4883–89 Test Method for Density of Polyethylene by the Ultrasound Technique, **08.03**
D 4884–90 Test Method for Seam Strength of Sewn Geotextiles, **04.09**
D 4885–88(1995) Test Method for Determining Performance Tensile Strength of Geomembranes Using Wide Strip Testing, **04.09**
D 4886–88(1995)$^{\epsilon 1}$ Test Method for Abrasion Resistance of Geotextiles (Sand Paper/Sliding Block Method), **04.09**
D 4887–89(1993) Test Method for Preparation of Viscosity Blends for Hot Recycled Bituminous Materials, **04.03**
D 4888–89(1993)$^{\epsilon 1}$ Test Method for Water Vapor in Natural Gas Using Length-of-Stain Detector Tubes, **05.05**
D 4889–93 Test Methods for Polyurethane Raw Materials: Determination of Viscosity of Crude or Modified Isocyanates, **08.03**
D 4890–93 Test Methods for Polyurethane Raw Materials: Determination of Gardner and APHA Color of Polyols, **08.03**
D 4891–89(1994)$^{\epsilon 1}$ Test Method for Heating Value of Gases in Natural Gas Range by Stoichiometric Combustion, **05.05**
D 4892–89(1994)$^{\epsilon 1}$ Test Method for Density of Solid Pitch (Helium Pycnometer Method), **04.04**
D 4893–94 Test Method for Determination of Pitch Volatility, **04.04**
D 4894–94 Specification for Polytetrafluoroethylene (PTFE) Granular Molding and Ram Extrusion Materials, **08.03**

D 5449/D5449M–93 Test Method for Transverse Compressive Properties of Hoop Wound Polymer Matrix Composite Cylinders, **15.03**
D 5450/D5450M–93 Test Method for Transverse Tensile Properties of Hoop Wound Polymer Matrix Composite Cylinders, **15.03**
D 5451–93 Practice for Sampling Using a Trier Sampler, **11.04**
D 5452–95 Test Method for Particulate Contamination in Aviation Fuels by Laboratory Filtration, **05.03**
D 5453–93 Test Method for the Determination of Total Sulfur in Light Hydrocarbons, Motor Fuels and Oils by Ultraviolet Fluorescence, **05.03**
D 5454–93 Test Method for Water Vapor Content of Gaseous Fuels Using Electronic Moisture Analyzers, **05.05**
D 5455–93 Test Method for Short-Term Liquid Sorption into Paper (Bristow Test), **15.09**
D 5456–93 Specification for Evaluation of Structural Composite Lumber Products, **04.10**
D 5457–93 Specification for Computing the Reference Resistance of Wood-Based Materials and Structural Connections for Load and Resistance Factor Design, **04.10**
D 5458–95 Test Method For Peel Cling of Stretch Wrap Film, **15.09**
D 5459–95 Test Method for Machine Direction Elastic Recovery and Permanent Deformation and Stress Retention of Stretch Wrap Materials, **15.09**
D 5460–93 Test Method for Rubber Compounding Materials—Water in Rubber Additives, **09.01**
D 5461–93 Test Method for Rubber Additives—Wet Sieve Analysis of Powdered Rubber Chemicals, **09.01**
D 5462–93 Test Method for On-Line Measurement of Low Level Dissolved Oxygen in Water, **11.01**
D 5463–93 Guide for Use of Test Kits to Measure Inorganic Constituents in Water, **11.01**
D 5464–93 Test Methods for pH Measurement of Water of Low Conductivity, **11.01**
D 5465–93 Practice for Determining Microbial Counts from Waters Analyzed by Plating Methods, **11.02**
D 5466–95 Test Method for Determination of Volatile Organic Chemicals in Atmospheres (Canister Sampling Methodology), **11.03**
D 5467–93 Test Method for Compressive Properties of Unidirectional Polymer Matrix Composites Using a Sandwich Beam, **15.03**
D 5468–95 Test Method for Gross Calorific and Ash Value of Waste Materials, **11.04**
D 5469–93 Guide for Application of New Spray Applied Polyurethane Foam and Coated Roofing Systems, **04.04**
D 5470–95 Test Method for Thermal Transmission Properties of Thin Thermally Conductive Solid Electrical Insulation Materials, **10.02**
D 5471–93 Specification for *O*-Xylene 980, **06.04**
D 5472–93 Test Method for Determining Specific Capacity and Estimating Transmissivity at the Control Well, **04.09**
D 5473–93 Test Method (Analytical Procedure for) Analyzing the Effects of Partial Penetration of Control Well and Determining the Horizontal and Vertical Hydraulic Conductivity in a Nonleaky Confined Aquifer, **04.09**
D 5474–93 Guide for Selection of Data Elements for Ground-Water Investigations, **04.09**
D 5475–93 Test Method for Nitrogen- and Phosphorus-Containing Pesticides in Water by Gas Chromatography with a Nitrogen-Phosphorus Detector, **11.02**
D 5476–93 Classification System for Thermoplastic Polyurethane Materials, **08.03**
D 5477–95 Practice for Identification of Polymer Layers or Inclusions by Fourier Transform Infrared Spectroscopy (FT-IR), **08.03**
D 5478–93 Test Method for Viscosity of Materials by a Falling Needle Viscometer, **06.01**
D 5479–94 Practice for Testing Biofouling Resistance of Marine Coatings Partially Immersed, **06.02**
D 5480–95 Test Method for Motor Oil Volatility by Gas Chromatography, **05.03**
D 5481–93 Test Method for Measuring Apparent Viscosity at High Temperature and High Shear Rate by Multicell Capillary Viscometer, **05.03**
D 5482–93 Test Method for Vapor Pressure of Petroleum Products (Mini Method–Atmospheric), **05.03**
D 5483–93 Test Method for Oxidation Induction Time of Lubricating Greases by Pressure Differential Scanning Calorimetry, **05.03**
D 5484–94 Specification for Steel Grid Bridge Flooring, **04.03**
D 5485–94a Test Method for Determining the Corrosive Effect of Combustion Products Using the Cone Corrosimeter, **10.02**
D 5486/D5486M–93 Specification for Pressure-Sensitive Tape for Packaging, Box Closure, and Sealing, **15.09**
D 5487–93 Test Method for Simulated Drop of Loaded Containers by Shock Machines, **15.09**
D 5488–94d Terminology of Environmental Labeling of Packaging Materials and Packages, **15.09**
D 5489–96a Guide for Care Symbols for Care Instructions on Textile Products, **07.02**
D 5490–93 Guide for Comparing Ground-Water Flow Model Simulations to Site-Specific Information, **04.09**
D 5491–94 Classification for Recycled Post-Consumer Polyethylene Film Sources for Molding And Extrusion Materials, **08.03**
D 5492–94 Test Method for Determination of Xylene Solubles in Propylene Plastics, **08.03**
D 5493–93 Test Method for Permittivity of Geotextiles Under Load, **04.09**
D 5494–93 Test Method for the Determination of Pyramid Puncture Resistance of Unprotected and Protected Geomembranes, **04.09**
D 5495–94 Practice for Sampling With a Composite Liquid Waste Sampler (COLIWASA), **11.04**
D 5496–93 Practice for In Field Immersion Testing of Geosynthetics, **04.09**
D 5497–94c Terminology Relating to Buttons, **07.02**
D 5498–94 Guide for Developing a Training Program for Coating Work Inspectors in Nuclear Facilities, **06.02**
D 5499–94 Test Methods for Heat Resistance of Polymer Linings for Flue Gas Desulfurization Systems, **06.02**
D 5500–94 Test Method for Vehicle Evaluation of Unleaded Automotive Spark-Ignition Engine Fuel for Intake Valve Deposit Formation, **05.03**
D 5501–94 Test Method for the Determination of Ethanol Content of Denatured Fuel Ethanol by Gas Chromatography, **05.03**
D 5502–94 Test Method for Apparent Density by Physical Measurements of Manufactured Anode and Cathode Carbon Used by the Aluminum Industry, **05.03**
D 5503–94 Practice for Natural Gas Sample-Handling and Conditioning Systems for Pipeline Instrumentation, **05.05**
D 5504–94 Test Method for Determination of Sulfur Compounds in Natural Gas and Gaseous Fuels by Gas Chromatography and Chemiluminescence, **05.05**
D 5505–94 Practice for Classifying Emulsified Recycling Agents, **04.03**
D 5506–94 Practice for Organizations Engaged in the Certification of Personnel Testing and Inspecting Bituminous Paving Materials, **04.03**
D 5507–94 Test Method for Determination of Trace Organic Impurities in Monomer Grade Vinyl Chloride by Capillary Column/Multi-Dimensional Gas Chromatography, **08.03**
D 5508–94a Test Method for Determination of Residual Acrylonitrile Monomer in Styrene-Acrylonitrile Copolymer Resins and Nitrile-Butadiene Rubber by Headspace-Capillary Gas Chromatography (HS-CGC), **08.03**
D 5509–94 Practice for Exposing Plastics to a Simulated Compost Environment, **08.03**
D 5510–94 Practice for Heat Aging of Oxidatively Degradable Plastics, **08.03**
D 5511–94 Test Method for Determining Anaerobic Biodegradation of Plastic Materials Under High-Solids Anaerobic-Digestion Conditions, **08.03**
D 5512–94 Practice for Exposing Plastics to a Simulated Compost Environment Using an Externally Heated Reactor, **08.03**
D 5513–94 Practice for Microwave Digestion of Industrial Furnace Feed-streams for Trace Element Analysis, **11.04**
D 5514–94 Test Method for Large Scale Hydrostatic Puncture Testing of Geosynthetics, **04.09**
D 5515–94 Test Method for Determination of the Swelling Properties of Bituminous Coal Using a Dilatometer, **05.05**
D 5516–94 Test Method for Evaluating the Flexural Properties of Fire-Retardant Treated Softwood Plywood Exposed to Elevated Temperatures, **04.10**
D 5517–94 Test Method for Determining Extractability of Metals from Art Materials, **06.02**
D 5518–94 Guide for Acquisition of File Aerial Photography and Imagery for Establishing Historic Site-Use and Surficial Conditions, **04.09**
D 5519–94 Test Method for Particle Size Analysis of Natural and Man-Made Riprap Materials, **04.09**
D 5520–94 Test Method for Laboratory Determination of Creep Properties of Frozen Soil Samples by Uniaxial Compression, **04.09**
D 5521–94 Guide for Development of Ground-Water Monitoring Wells in Granular Aquifers, **04.09**
D 5522–94 Specification for Minimum Requirements for Laboratories Engaged in Chemical Analysis of Soil, Rock and Contained Fluid, **04.09**
D 5523–94 Test Method for Polyurethane Raw Materials: Acidity by Argentometric Determination of Hydrolyzable Chlorine in Monomeric, Aromatic Isocyanates, **08.03**
D 5524–94 Test Method for Determination of Phenolic Antioxidants in High Density Polyethylene Using Liquid Chromatography, **08.03**
D 5525–94a Practice for Exposing Plastics to a Simulated Landfill Environment, **08.03**
D 5526–94 Test Method for Determining Anaerobic Biodegradation of Plastic Materials Under Accelerated Landfill Conditions, **08.03**
D 5527–94 Practices for Measuring Surface Wind and Temperature by Acoustic Means, **11.03**
D 5528–94A Test Method for Mode I Interlaminar Fracture Toughness of Unidirectional Fiber-Reinforced Polymer Matrix Composites, **15.03**
D 5530–94 Test Method for Total Moisture of Hazardous Waste Fuel by Karl Fischer Titrimetry, **11.04**
D 5531–94 Guide for the Preparation, Maintenance and Distribution of Physical Product Standards for Color and Geometric Appearance of Coatings, **06.01**
D 5532–94 Specification for Micaceous Iron Oxide Pigments for Paint, **06.03**
D 5533–95 Test Method for Evaluation of Automotive Engine Oils in the Sequence IIIE Spark-Ignition Engine, **05.03**
D 5534–94 Test Method for Vapor-Phase Rust-Preventing Characteristics of Hydraulic Fluids, **05.03**
D 5535–94 Terminology Relating to Formed-in-Place Sealants for Joints and Cracks in Pavements, **04.03**
D 5536–94 Practice for Sampling Forest Trees for Determination of Clear Wood Properties, **04.10**
D 5537–94 Test Method for Heat Release, Flame Spread and Mass Loss Testing of Insulating Materials Contained in Electrical or Optical Fiber Cables When Burning in a Vertical Cable Tray Configuration, **10.02**

F 1105–95 Test Method for Preparing Aircraft Cleaning Compounds, Liquid-Type, Temperature-Sensitive, or Solvent-Based, for Storage Stability Testing, **15.03**
F 1106–87(1993)$^{\epsilon 1}$ Specification for Warping Heads, Rope Handling (Gypsy Head, Capstan Head), **01.07**
F 1107–95 Terminology Relating to Snowboarding, **15.07**
F 1108–88 Specification for TI6A14V Alloy Castings for Surgical Implants, **13.01**
F 1109 Discontinued 1993; Specification for Porous Composites of Polytetrafluoroethylene and Carbon for Surgical Implant Applications
F 1110–90 Test Method for Sandwich Corrosion Test, **15.03**
F 1111–88 Test Method for Corrosion of Low-Embrittling Cadmium Plate by Aircraft Maintenance Chemicals, **15.03**
F 1112–95 Test Method for Static Testing of Tubeless Pneumatic Tires for Rate of Loss of Inflation Pressure, **09.02**
F 1113–87(1995)$^{\epsilon 1}$ Test Method for Electrochemical Measurement of Diffusable Hydrogen in Steels (Barnacle Electrode), **15.03**
F 1114–94 Specification for Heat Sanitizing Commercial Pot, Pan and Utensil Station Rack Type Water-Driven Rotary Spray, **15.07**
F 1115–95 Test Method for Determining the Carbon Dioxide Loss of Beverage Containers, **15.09**
F 1116–88(1995) Test Method for Determining Dielectric Strength of Overshoe Footwear, **10.03**
F 1117–93 Specification for Dielectric Overshoe Footwear, **10.03**
F 1118–91 Specification for National Air Medical Transport Units Resources Catalog, **13.01**
F 1119–91 Specification for Rotary Wing Basic Life Support Transport Units, **13.01**
F 1120–87(1993)$^{\epsilon 1}$ Specification for Circular Metallic Bellows Type Expansion Joints for Piping Applications, **01.07**
F 1121–87(1993)$^{\epsilon 1}$ Specification for International Shore Connections for Marine Fire Applications, **01.07**
F 1122–87(1992) Specification for Quick Disconnect Couplings, **01.07**
F 1123–87(1993)$^{\epsilon 1}$ Specification for Non-Metallic Expansion Joints, **01.07**
F 1124–91 Specification for Rotary Wing Advanced Life Support Transport Units, **13.01**
F 1125–87(1995) Terminology of Image Quality in Impact Printing Systems, **15.09**
F 1126–92 Specification for Food Cutters (Electric), **15.07**
F 1127–88 Guide for Containment by Emergency Response Personnel of Hazardous Material Spills, **11.04**
F 1128–88 Test Method for Abrasion Resistance of Transparent Plastics and Coatings Using Salt Impingement Method, **15.03**
F 1129–88(1995)$^{\epsilon 1}$ Guide for Using Aqueous Foams to Control the Vapor Hazard from Immiscible Volatile Liquids, **11.04**
F 1130–93 Practice for Inspecting the Coating System of a Ship, **01.07**
F 1131 Discontinued 1993; Practice for Inspecting the Coating System of a Ship's Tanks and Voids; Replaced by F 1130
F 1132 Discontinued 1993; Practice for Inspecting the Coating System of a Ship's Deck And Deck Machinery; Replaced by F 1130
F 1133 Discontinued 1993; Practice for Inspecting the Coating System of a Ship's Underwater Hull and Boottop During Drydocking; Replaced by F 1130
F 1134–94 Specification for Insulation Resistance Monitor for Shipboard Electrical Motors and Generators, **01.07**
F 1135–88(1993)$^{\epsilon 1}$ Specification for Cadmium or Zinc Chromate Organic Corrosion Protective Coating for Fasteners, **15.08**
F 1136–88(1993) Specification for Chromium/Zinc Corrosion Protective Coatings for Fasteners, **15.08**
F 1137–88(1993) Specification for Phosphate/Oil and Phosphate/Organic Corrosion Protective Coatings for Fasteners, **15.08**
F 1138–92 Specification for Spray Shields for Mechanical Joints, **01.07**
F 1139–88(1993)$^{\epsilon 1}$ Specification for Steam Traps and Drains, **01.07**
F 1140–88 Test Methods for Failure Resistance of Unrestrained and Nonrigid Packages for Medical Applications, **15.09**
F 1141–93 Specification for Wallcovering, **15.07**
F 1142–90 Specification for Manhole Cover Assembly Bolted, Semi-Flush, Oiltight and Watertight, **01.07**
F 1143–90 Specification for Manhole Cover Assembly, Raised, Oiltight, and Watertight, **01.07**
F 1144–90 Specification for Manhole Cover Assembly, Bolted, Hinged, Semi-Flush, Oiltight and Watertight, **01.07**
F 1145–92 Specification for Turnbuckles, Swaged, Welded, Forged, **01.07**
F 1146–91 Specification for Rotary Wing Specialized Medical Transport Units, **13.01**
F 1147–95 Test Method for Tension Testing of Porous Metal Coatings, **13.01**
F 1148–96a Consumer Safety Performance Specification for Home Playground Equipment, **15.07**
F 1149–93 Practice for Qualifications, Responsibilities, and Authority of Individuals and Institutions Providing Medical Direction of Emergency Medical Services, **13.01**
F 1150–88(1995) Specification for Commercial Food Waste Pulper and Waterpress Assembly, **15.07**
F 1151–88(1992) Test Method for Determining Variations in Hardness of Film Ribbon Pancakes, **15.09**
F 1152–93 Test Method for Dimensions of Notches on Silicon Wafers, **10.05**
F 1153–92 Test Method for Characterization of Metal-Oxide-Silicon (MOS) Structures by Capacitance-Voltage Measurements, **10.05**
F 1154–96a Practices for Qualitatively Evaluating the Comfort, Fit, Function, **11.03**
F 1155–88(1993)$^{\epsilon 1}$ Practice for Selection and Application of Piping System Materials, **01.07**
F 1156–94 Terminology Relating to Product Counterfeit Protection Systems, **15.07**
F 1157–90(1994)$^{\epsilon 1}$ Practice for Classifying the Relative Performance of the Physical Properties of Security Seals, **15.07**
F 1158–94 Guide for Inspection and Evaluation of Tampering of Security Seals, **15.07**
F 1159–94 Practice for the Design and Manufacture of Amusement Rides and Devices, **15.07**
F 1160–91 Practice for Constant Stress Amplitude Fatigue Testing of Porous Metal-Coated Metallic Materials, **13.01**
F 1161–88(1994) Specification for Minimum Performance and Safety Requirements for Components and Systems of Anesthesia Gas Machines, **13.01**
F 1162–88(1994) Specification for Pole Vault Landing Pits, **15.07**
F 1163–95 Specification for Headgear Used in Horse Sports and Horseback Riding, **15.07**
F 1164–88 Test Method for Evaluation of Transparent Plastics Exposed to Accelerated Weathering Combined with Biaxial Stress, **15.03**
F 1165–88 Test Method for Measuring Angular Displacement of Multiple Images in Transparent Parts, **15.03**
F 1166–95 Practice for Human Engineering Design for Marine Systems, Equipment and Facilities, **01.07**
F 1167 Discontinued 1993; Terminology Relating to Aseptic Packaging
F 1168–88(1994) Guide for Use in the Establishment of Thermal Processes for Foods Packaged in Flexible Containers, **15.09**
F 1169–88(1993) Specification for Full Size Baby Crib, **15.07**
F 1170–88(1993) Practice for Determining Performance of a Filter Medium Using Water and Siliceous Particles, **14.02**
F 1171 Not yet assigned
F 1172–88(1993)$^{\epsilon 1}$ Specification for Fuel Oil Meters of the Volumetric Positive Displacement Type, **01.07**
F 1173–95 Specification for Thermosetting Resin Fiberglass Pipe and Fittings to Be Used for Marine Applications, **01.07**
F 1174–91(1995) Practice for Using a Personal Computer as a Test Instrument, **15.09**
F 1175–88(1992) Practice for Using the Computer Impact Print-Out Unit as a Test Instrument for Manifold Comparison, **15.09**
F 1176–93 Practice for Design and Installation of Thermoplastic Irrigation Systems with Maximum Working Pressure of 63 psi, **08.04**
F 1177–94a Terminology Relating to Emergency Medical Services, **13.01**
F 1178–88(1994)$^{\epsilon 1}$ Specification for Enameling System, Baking, Metal Joiner Work and Furniture, **01.07**
F 1179–88(1992) Practice for Inspection Procedure for Use of Anaerobic Thread Locking Compounds with Studs, **01.07**
F 1180 Not yet assigned
F 1181–88 Test Method for Measuring Binocular Disparity in Transparent Parts, **15.03**
F 1182–90(1994) Specification for Anodes, Sacrificial Zinc Alloy, **01.07**
F 1183–88(1992)$^{\epsilon 1}$ Specification for Aluminum Alloy Chain Link Fence Fabric, **01.06**
F 1184–94 Specification for Industrial and Commercial Horizontal Slide Gates, **01.06**
F 1185–88(1993)$^{\epsilon 1}$ Specification for Composition of Ceramic Hydroxylapatite for Surgical Implants, **13.01**
F 1186–93 Classification System for Chemicals According to Functional Groups, **11.03**
F 1187–91 Specification for Fixed Wing Basic Life Support Transport Units, **13.01**
F 1188–93a Test Method for Interstitial Atomic Oxygen Content of Silicon by Infrared Absorption, **10.05**
F 1189 Discontinued 1993; Test Method for Using Computer-Assisted Infrared Spectrophotometry to Measure the Interstitial Oxygen Content of Silicon Slices Polished on Both Sides
F 1190–93 Practice for Neutron Irradiation of Unbiased Electronic Components, **13.01**
F 1191 Discontinued 1993; Guide for Radiation Testing of Semiconductor Memories
F 1192M–95 Guide for the Measurement of Single Event Phenomena (SEP) Induced by Heavy Ion Irradiation of Semiconductor Devices (Metric), **10.04**
F 1193–95 Practice for An Amusement Ride and Device Manufacturer Quality Assurance Program, **15.07**
F 1194–89(1994)$^{\epsilon 1}$ Guide for Documenting the Results of Chemical Permeation Testing on Materials Used in Protective Clothing, **11.03**
F 1195–88(1993) Specification for Rigid Laryngoscopes for Tracheal Intubation—Hook on Fittings for Fiberilluminated Blades and Handles, **13.01**
F 1196–94 Specification for Sliding Watertight Door Assemblies, **01.07**
F 1197–89(1994)$^{\epsilon 1}$ Specification for Sliding Watertight Door Control Systems, **01.07**
F 1198–92 Guide for Shipboard Fire Detection Systems, **01.07**
F 1199–88(1993)$^{\epsilon 1}$ Specification for Cast (All Temperatures and Pressures) and Welded Pipe Line Strainers (150 psig and 150°F Maximum), **01.07**
F 1200–88(1993)$^{\epsilon 1}$ Specification for Fabricated (Welded) Pipe Line Strainers (Above 150 psig and 150°F), **01.07**

EXHIBIT 25

1997 Annual Book of ASTM Standards

Index

Alphanumeric List

ASTM Standards

Standards:

Specifications	2835
Test Methods	7165
Terminology	225
Total	10225

Each ASTM standard has a unique serial designation. It is comprised of a capital letter indicating general classification (A, ferrous metals; B, nonferrous metals; C, cementitious, cermanic, concrete, and masonry materials; D, miscellaneous materials; E, miscellaneous subjects; F, materials for specific applications; G, corrosion, deterioration, and degradation of materials; ES, emergency standards; P, proposals; PS, provisional standards), a serial number (one to four digits), a dash, and the year of issue.

In each serial designation, the number following the dash indicates the year of original adoption as standard or, in the case of revision, the year of last revision. Thus, standards adopted or revised during the year 1997 have as their final number, 97. A letter following this number indicates more than one revision during that year, that is 97a indicates the second revision in 1997, 97b the third revision, etc. Standards that have been reapproved without change are indicated by the year of last reapproval in parentheses as part of the designation number, for example, (1997). A superscript epsilon indicates an editorial change since the last revision or reapproval; ϵ1 for the first change, ϵ2 for the second, etc.

If a standard is written in acceptable metric units and has a companion standard written in inch-pound units (or other units), the metric standard is identified by a letter M after the serial number; this standard contains "hard metric" units.

If a standard is written in inch-pound units (or other units) and acceptable metric units, the document is identified by a dual alphanumeric designation.

When reference is made to a standard, the *complete* designation should be given. Best practice is to state the *designation and title.*

The boldface number(s) following the title refer to the volume(s) of the *Annual Book of ASTM Standards* in which the standard appears.

This list includes only those standards which appear in the 1997 edition of each volume of the *Annual Book of ASTM Standards.* New and revised standards that were approved after the closing date for the volume are available as separate reprints and will be listed in next year's edition.

Each ASTM standard is available as a separate reprint from ASTM. Price and order information are available from ASTM Customer Service, 100 Barr Harbor Drive, West Conshohocken, PA 19428-2959, 610-832-9585.

B. NONFERROUS METALS

B 1–95 Specification for Hard-Drawn Copper Wire, **02.03**
B 2–94 Specification for Medium-Hard-Drawn Copper Wire, **02.03**
B 3–95 Specification for Soft or Annealed Copper Wire, **02.03**
B 4 Discontinued 1981; Specification Tough-Pitch Lake Copper-Refinery Shapes
B 5–95 Specification for Electrolytic Tough-Pitch Copper Refinery Shapes, **02.01**
B 6–95a Specification for Zinc, **02.04**
B 7 Discontinued 1941; Specification for Copper-Base Alloys in Ingot Form for Sand Castings; Replaced by B 30
B 8–95 Specification for Concentric-Lay-Stranded Copper Conductors, Hard, Medium-Hard, or Soft, **02.03**
B 9–90 Specification for Bronze Trolley Wire, **02.03**
B 10 Discontinued 1934; Specification for Tin-Bronze and Leaded Tin-Bronze Sand Castings
B 11 Discontinued 1981; Specification for Copper Plates for Locomotive Fireboxes
B 12 Discontinued 1982; Specification for Copper Rods for Locomotive Staybolts; Replaced by B 133
B 13 Discontinued 1961; Specification for Seamless Copper Boiler Tubes
B 14 Discontinued 1955; Specification for Seamless Brass Boiler Tubes
B 15 Discontinued 1939; Specification for Copper and Copper-Base Alloy Forging Rod, Bar, and Shapes; Replaced by B 124
B 16–92 Specification for Free-Cutting Brass Rod, Bar, and Shapes for Use in Screw Machines, **02.01**
B 16M–92 Specification for Free-Cutting Brass Rod, Bar, and Shapes for Use in Screw Machines [Metric], **02.01**
B 17 Discontinued 1927; Specification for Bronze Castings in the Rough for Locomotive Wearing Parts; Replaced by B 66, B 67
B 18 Discontinued 1942; Methods of Testing Chemical Analysis of Lead, Tin, and Base Solder Metal; Replaced by E 46
B 19–86(1993)$^{\epsilon 1}$ Specification for Cartridge Brass Sheet, Strip, Plate, Bar, and Disks (Blanks), **02.01**
B 20 Discontinued 1940; Specification for Cartridge Brass Sheet, Strip, Plate, Bar, and Disks; Combined with B 19
B 21–96 Specification for Naval Brass, Rod, Bar, and Shapes,, **02.01**
B 21M–96 Specification for Naval Brass, Rod, Bar, and Shapes [Metric], **02.01**
B 22–95 Specification for Bronze Castings for Bridges and Turntables, **02.01**
B 23–94 Specification for White Metal Bearing Alloys (Known Commercially as Babbitt Metal), **02.04**
B 24 Discontinued 1956; Specification for Aluminum Ingots for Remelting
B 25 Discontinued 1946; Specification for Aluminum Alloy Sheet and Plate; Replaced by B 209
B 26/B26M–96a Specification for Aluminum-Alloy Sand Castings, **02.02**
B 27 Discontinued 1943; Methods of Testing Chemical Analysis for Sulfur in Special Brasses and Bronzes; Replaced by E 54
B 28 Discontinued 1943; Methods of Testing Chemical Analysis of Special Brasses and Bronzes; Replaced by E 54
B 29–92 Specification for Refined Lead, **02.04**
B 30–96 Specification for Copper-Base Alloys in Ingot Form, **02.01**
B 31 Discontinued 1932; Specification for Copper-Base Alloys in Ingot Form for Sand Casting; Replaced by B 30
B 32–96 Specification for Solder Metal, **02.04**
B 33–94 Specification for Tinned Soft or Annealed Copper Wire for Electrical Purposes, **02.03**
B 34 Redesignated E 53
B 35 Discontinued 1942; Methods of Testing Chemical Analysis of Pig Lead; Replaced by E 37
B 36/B36M–95 Specification for Brass Plate, Sheet, Strip, and Rolled Bar, **02.01**
B 37–96 Specification for Aluminum for Use in Iron and Steel Manufacture, **02.02**
B 38 Discontinued 1942; Methods of Testing Chemical Analysis of Slab Zinc (Spelter); Replaced by E 40
B 39–79(1993) Specification for Nickel, **02.04**
B 40 Discontinued 1942; Photometric Methods for Chemical Analysis of Aluminum and Aluminum Base Alloys; Replaced by E 34
B 41 Discontinued 1942; Method for Testing Chemical Analysis of Nickel; Replaced by E 39
B 42–96 Specification for Seamless Copper Pipe, Standard Sizes, **02.01**
B 43–96 Specification for Seamless Red Brass Pipe, Standard Sizes, **02.01**
B 44 Discontinued 1937; Specification for Copper and Copper-Alloy Seamless Condenser Tubes and Ferrule Stock; Replaced by B 111
B 45 Discontinued 1942; Methods for Testing Chemical Analysis of Brasses
B 46 Discontinued 1943; Methods of Testing Chemical Analysis for Sulfur in Special Brasses and Bronzes; Replaced by E 54
B 47–95a Specification for Copper Trolley Wire, **02.03**
B 48–92 Specification for Soft Rectangular and Square Bare Copper Wire for Electrical Conductors, **02.03**
B 49–92 Specification for Copper Redraw Rod for Electrical Purposes, **02.01**
B 50 Discontinued 1937; Specification for Non-Ferrous Insect Screen Cloth
B 51 Discontinued 1945; Specification for Phospher Tin
B 52 Discontinued 1980; Specification for Phosphor Copper; Replaced by B 644
B 53 Discontinued 1980; Specification for Silicon Copper; Replaced by B 644
B 54 Discontinued 1941; Specification for High-Strength Yellow Brass (Manganese Bronze) and Leaded High-Strength Yellow Brass (Leaded Manganese Bronze) Sand Castings
B 55 Discontinued 1937; Specification for Seamless 70-30 Brass Condenser Tubes and Ferrule Stock
B 56 Discontinued 1937; Specification for Seamless Muntz Metal Condenser Tubes and Ferrule Stock; Replaced by B 111
B 57 Discontinued 1942; Specification for Copper-Alloy Condenser Tube Plates; Replaced by B 171
B 58 Discontinued 1946; Specification for Aluminum-Base Alloys in Ingot Form for Sand Castings; Replaced by B 179
B 59 Discontinued 1941; Specification for Aluminum-Bronze Sand Castings; Replaced by B 148
B 60 Discontinued 1944; Specification for Tin-Bronze and Leaded Tin-bronze Sand Castings; Replaced by B 143
B 61–93 Specification for Steam or Valve Bronze Castings, **02.01**
B 62–93 Specification for Composition Bronze or Ounce Metal Castings, **02.01**
B 63–90(1995)$^{\epsilon 1}$ Test Method for Resistivity of Metallically Conducting Resistance and Contact Materials, **03.04**
B 64 Discontinued 1952; Specification for Brazing Solder
B 65 Discontinued 1938; Specification for Lead Yellow Brass Sand Castings for General Purposes
B 66–95 Specification for Bronze Castings for Steam Locomotive Wearing Parts, **02.01**
B 67–93a Specification for Car and Tender Journal Bearings, Lined, **02.01**
B 68–96 Specification for Seamless Copper Tube, Bright Annealed, **02.01**
B 68M–96 Specification for Seamless Copper Tube, Bright Annealed [Metric], **02.01**
B 69–95a Specification for Rolled Zinc, **02.04**
B 70–90(1995)$^{\epsilon 1}$ Test Method for Change of Resistance With Temperature of Metallic Materials for Electrical Heating, **03.04**
B 71 Discontinued 1942; Methods of Testing Chemical Analysis of Nickel-Chromium and Nickel-Chromium-Iron Alloys
B 72 Discontinued 1977; Specification for Fire-Refined Casting Copper
B 73 Discontinued 1953; Specification for Silver Solders
B 74 Discontinued 1941; Specification for High-Leaded Tin-Bronze Sand Castings
B 75–95a Specification for Seamless Copper Tube [Metric], **02.01**
B 75M–95 Specification for Seamless Copper Tube [Metric], **02.01**
B 76–90(1995)$^{\epsilon 1}$ Test Method for Accelerated Life of Nickel-Chromium and Nickel-Chromium-Iron Alloys for Electrical Heating, **03.04**
B 77–81(1994)$^{\epsilon 1}$ Test Method for Thermoelectric Power of Electrical-Resistance Alloys, **03.04**
B 78–90(1995)$^{\epsilon 1}$ Test Method for Accelerated Life of Iron-Chromium-Aluminum Alloys for Electrical Heating, **03.04**
B 79 Discontinued 1946; Specification for Aluminum and Aluminum Alloy Sheet and Plate; Replaced by B 209
B 80–93 Specification for Magnesium-Alloy Sand Castings, **02.02**
B 81 Redesignated E 56
B 82 Discontinued 1959; Specification for Drawn or Rolled Alloy 80 Percent Nickel, 20 Percent Chromium, for Electrical-Heating Elements; Replaced by B 344
B 83 Discontinued 1959; Specification for Drawn or Rolled Alloy, 60 Percent Nickel, 16 Percent Chromium, and Balance Iron, for Electrical-Heating Elements; Replaced by B 344
B 84–90(1995)$^{\epsilon 1}$ Test Method for Temperature-Resistance Constants of Alloy Wires for Precision Resistors, **03.04**
B 85–96 Specification for Aluminum-Alloy Die Castings, **02.02**
B 86–95 Specification for Zinc-Alloy Die Castings, **02.04**
B 87 Discontinued 1938; Specification for Hard-Drawn Copper Transmission Cable; Replaced by B 8
B 88–96 Specification for Seamless Copper Water Tube,, **02.01**
B 88M–96 Specification for Seamless Copper Water Tube [Metric], **02.01**
B 89 Discontinued 1946; Specification for Aluminum and Aluminum-Alloy Bars, Rods, and Wire; Replaced by B 211
B 90M Discontinued 1993; Replaced by B 90/B 90M
B 90/B90M–93 Specification for Magnesium-Alloy Sheet and Plate, **02.02**
B 91–92 Specification for Magnesium-Alloy Forgings, **02.02**
B 92M Discontinued 1990; Replaced by B 92/B 92M
B 92/B92M–89(1994)$^{\epsilon 1}$ Specification for Magnesium Ingot and Stick for Remelting, **02.02**
B 93M Discontinued 1990; Replaced by B 93/B 93M
B 93/B93M–94b Specification for Magnesium Alloys in Ingot Form for Sand Castings, Permanent Mold Castings, and Die Castings, **02.02**
B 94–94 Specification for Magnesium-Alloy Die Castings, **02.02**
B 95 Discontinued 1985; Method of Testing Linear Expansion of Metals; Replaced by E 228
B 96–93 Specification for Copper-Silicon Alloy Plate, Sheet, Strip, and Rolled Bar for General Purposes and Pressure Vessels, **02.01**
B 96M–93a Specification for Copper-Silicon Alloy Plate, Sheet, Strip, and Rolled Bar for General Purposes and Pressure Vessels [Metric], **02.01**
B 97 Discontinued 1982; Specification for Copper-Silicon Alloy Plate, Sheet, Strip, and Rolled Bar for General Purposes; Combined with B 96
B 98–93 Specification for Copper-Silicon Alloy Rod, Bar, and Shapes, **02.01**
B 98M–93 Specification for Copper-Silicon Alloy Rod, Bar, and Shapes [Metric], **02.01**
B 99M Discontinued 1996; Replaced by B 99/B 99M

B 99/B99M–96 Specification for Copper-Silicon Alloy Wire for General Applications, **02.01**
B 100–97 Specification for Wrought Copper-Alloy Bearing and Expansion Plates and Sheets for Bridge and Other Structural Use, **02.01**
B 101–96 Specification for Lead-Coated Copper Sheet and Strip for Building Construction, **02.01**
B 102–93 Specification for Lead and Tin Alloy Die Castings, **02.04**
B 103/B103M–93 Specification for Phosphor Bronze Plate, Sheet, Strip, and Rolled Bar, **02.01**
B 104 Discontinued 1937; Specification for Seamless Copper-Nickel Alloy Condenser Tubes and Ferrule Stock; Replaced by B 111
B 105–94 Specification for Hard-Drawn Copper Alloy Wires for Electric Conductors, **02.03**
B 106–96 Test Method for Flexivity of Thermostat Metals, **03.04**
B 107M Discontinued 1992; Replaced by B 107/B 107M
B 107/B107M–94 Specification for Magnesium-Alloy Extruded Bars, Rods, Shapes, Tubes, and Wire, **02.02**
B 108–97 Specification for Aluminum-Alloy Permanent Mold Castings, **02.02**
B 109 Discontinued 1946; Specification for Aluminum and Aluminum Alloy Sheet and Plate; Replaced by B 209
B 110 Discontinued 1982; Method of Testing Dielectric Strength of Anodically Coated Aluminum
B 111–95 Specification for Copper and Copper-Alloy Seamless Condenser Tubes and Ferrule Stock, **02.01**
B 111M–93 Specification for Copper and Copper-Alloy Seamless Condenser Tubes and Ferrule Stock [Metric], **02.01**
B 112 Discontinued 1946; Specification for Aluminum-Base Alloys in Ingot Form for Sand Die Castings; Replaced by B 179
B 113 Redesignated F 113
B 114–90(1995)$^{\epsilon 1}$ Test Method for Temperature-Resistance Constants of Sheet Materials for Shunts and Precision Resistors, **03.04**
B 115–95 Specification for Electrolytic Cathode Copper, **02.01**
B 116–95 Specification for Figure-9 Deep-Section Grooved and Figure-8 Copper Trolley Wire for Industrial Haulage, **02.03**
B 117–95 Practice for Operating Salt Spray (Fog) Apparatus, **03.02**
B 118 Discontinued 1948; Specification for Nickel and Nickel-Alloy Wire and Ribbon for Electronic Tube Filaments
B 119 Discontinued 1976; Classification of Cast Copper-Base Alloys; Replaced by B 30, B 584
B 120 Discontinued 1940; Specification for Copper-Base Alloys in Ingot Form for Sand Casting; Replaced by B 30
B 121/B121M–95 Specification for Leaded Brass Plate, Sheet, Strip, and Rolled Bar, **02.01**
B 122/B122M–95 Specification for Copper-Nickel-Tin Alloy, Copper-Nickel-Zinc Alloy (Nickel Silver), and Copper-Nickel Alloy Plate, Sheet, Strip, and Rolled Bar, **02.01**
B 123 Discontinued—Replaced by B 30
B 124–96 Specification for Copper and Copper Alloy Forging Rod, Bar, and Shapes, **02.01**
B 124M–96 Specification for Copper and Copper Alloy Forging Rod, Bar, and Shapes [Metric], **02.01**
B 125 Discontinued 1946; Specification for Aluminum-Base Alloys in Ingot Form for Sand Castings, Die Castings, and Permanent Mold Castings; Replaced by B 179
B 126 Discontinued 1947; Specification for Aluminum-Manganese Alloy Sheet and Plate for Use in Welded Pressure Vessels; Replaced by B 209
B 127–93a Specification for Nickel-Copper Alloy (UNS N04400) Plate, Sheet, and Strip, **02.04**
B 128 Discontinued 1955; Methods of Testing Sleeves and Tubing for Radio Tube Cathodes
B 129–96 Specification for Cartridge Brass Cartridge Case Cups, **02.01**
B 130–95 Specification for Commercial Bronze Strip for Bullet Jackets, **02.01**
B 131–96 Specification for Copper Alloy Bullet Jacket Cups, **02.01**
B 132 Discontinued 1973; Specification for Leaded High-Strength Yellow Brass (Maganese Bronze) Sand Castings; Replaced by B 584
B 134–96 Specification for Brass Wire, **02.01**
B 135–96 Specification for Seamless Brass Tube [Metric], **02.01**
B 136–84(1993) Method for Measurement of Stain Resistance of Anodic Coatings on Aluminum, **02.05**
B 137–95 Test Method for Measurement of Coating Mass Per Unit Area of Anodically Coated Aluminum, **02.05**
B 138–96 Specification for Manganese Bronze Rod, Bar, and Shapes [Metric], **02.01**
B 138M–96 Specification for Manganese Bronze Rod, Bar, and Shapes [Metric], **02.01**
B 139–95 Specification for Phosphor Bronze Rod, Bar, and Shapes, **02.01**
B 139M–95 Specification for Phosphor Bronze Rod, Bar, and Shapes [Metric], **02.01**
B 140–92 Specification for Copper-Zinc-Lead (Leaded Red Brass or Hardware Bronze) Rod, Bar, and Shapes, **02.01**
B 140M–92 Specification for Copper-Zinc-Lead (Leaded Red Brass or Hardware Bronze) Rod, Bar, and Shapes [Metric], **02.01**
B 141 Discontinued 1967; Specification for Electrodeposited Coatings of Nickel and Chromium on Copper and Copper-Base Alloys; Replaced by B 456
B 142 Discontinued 1967; Specification for Electrodeposited Coatings of Nickel and Chromium on Zinc and Zinc-Base Alloys; Replaced by B 456
B 143 Discontinued 1973; Specification for Tin-Bronze and Leaded Tin-Bronze Sand Castings; Replaced by B 584
B 144 Discontinued 1973; Specification for High-Leaded Tin-Bronze Sand Castings; Replaced by B 584
B 145 Discontinued 1973; Specification for Leaded Red Brass and Leaded Semi-Red Brass Sand Castings; Replaced by B 584
B 146 Discontinued 1973; Specification for Leaded Yellow Brass Sand Castings for General Purposes; Replaced by B 584
B 147 Discontinued 1973; Specification for High-Strength Yellow Brass (Manganese Bronze) and Leaded High-Strength Yellow Brass (Leaded Manganese Bronze) Sand Castings; Replaced by B 584
B 148–93a Specification for Aluminum-Bronze Sand Castings, **02.01**
B 149 Discontinued 1973; Specification for Leaded Nickel-Brass (Leaded Nickel-Silver) and Leaded Nickel-Bronze (Leaded Nickel-silver); Replaced by B 584
B 150–95a Specification for Aluminum Bronze Rod, Bar, and Shapes, **02.01**
B 150M–95a Specification for Aluminum Bronze Rod, Bar, and Shapes [Metric], **02.01**
B 151–94 Specification for Copper-Nickel-Zinc Alloy (Nickel Silver) and Copper-Nickel Rod and Bar, **02.01**
B 151M–94 Specification for Copper-Nickel-Zinc Alloy (Nickel Silver) and Copper-Nickel Rod and Bar [Metric], **02.01**
B 152–97 Specification for Copper Sheet, Strip, Plate, and Rolled Bar, **02.01**
B 152M–97 Specification for Copper Sheet, Strip, Plate, and Rolled Bar [Metric], **02.01**
B 153–91(1996)$^{\epsilon 1}$ Test Method for Expansion (Pin Test) of Copper and Copper-Alloy Pipe and Tubing, **02.01**
B 154–95 Test Method for Mercurous Nitrate Test for Copper and Copper Alloys, **02.01**
B 155 Redesignated F 155
B 156 Discontinued 1948; Method of Testing Local Thickness of Electrodeposited Coatings; Replaced by F 219
B 157 Discontinued 1955; Methods of Testing Wire for Supports Used in Electronic Devices and Lamps
B 158 Discontinued 1942; Specification for Rope-Lay-Stranded Copper Conductors Having Bunch-Stranded Members for Electrical Conductors; Replaced by B 172, B 173, B 174
B 159–96a Specification for Phosphor Bronze Wire [Metric], **02.01**
B 159M–96a Specification for Phosphor Bronze Wire [Metric], **02.01**
B 160–93 Specification for Nickel Rod and Bar, **02.04**
B 161–93 Specification for Nickel Seamless Pipe and Tube, **02.04**
B 162–93a Specification for Nickel Plate, Sheet, and Strip, **02.04**
B 163–96 Specification for Seamless Nickel and Nickel Alloy Condenser and Heat-Exchanger Tubes, **02.04**
B 164–93 Specification for Nickel-Copper Alloy Rod, Bar, and Wire, **02.04**
B 165–93 Specification for Nickel-Copper Alloy (UNS N04400) Seamless Pipe and Tube, **02.04**
B 166–95 Specification for Nickel-Chromium-Iron Alloys (UNS N06600, N06601, N06690, N06025, AND N06045) and Nickel-Chromium-Cobalt-Molybdenum Alloy (UNS N06617) Rod, Bar, and Wire, **02.04**
B 167–94a Specification for Nickel-Chromium-Iron Alloy (UNS N06600, N06601, N06690, N06025, and N06045) Seamless Pipe and Tube, **02.04**
B 168–95a Specification for Nickel-Chromium-Iron Alloys (UNS N06600, N06601, and N06690) and Nickel-Chromium-Cobalt-Molybdenum Alloy (UNS N06617) Plate, Sheet, and Strip, **02.04**
B 169–95 Specification for Aluminum Bronze Sheet, Strip, and Rolled Bar, **02.01**
B 169M–96 Specification for Aluminum Bronze Plate, Sheet, Strip, and Rolled Bar [Metric], **02.01**
B 170–93 Specification for Oxygen-Free Electrolytic Copper—Refinery Shapes, **02.01**
B 171–95 Specification for Copper-Alloy Plate and Sheet for Pressure Vessels, Condensers, and Heat Exchangers, **02.01**
B 171M–96 Specification for Copper-Alloy Plate and Sheet for Pressure Vessels, Condensers and Heat Exchangers [Metric], **02.01**
B 172–95 Specification for Rope-Lay-Stranded Copper Conductors Having Bunch-Stranded Members, for Electrical Conductors, **02.03**
B 173–95 Specification for Rope-Lay-Stranded Copper Conductors Having Concentric-Stranded Members, for Electrical Conductors, **02.03**
B 174–95 Specification for Bunch-Stranded Copper Conductors for Electrical Conductors, **02.03**
B 175 Discontinued 1955; Specification for Round Nickel Wire for Lamps and Electric Devices
B 176–95 Specification for Copper-Alloy Die Castings, **02.01**
B 177–93 Practice for Chromium Electroplating on Steel for Engineering Use, **02.05**
B 178 Discontinued 1957; Specification for Aluminum-Alloy Sheet and Plate for Pressure Vessel Application; Replaced by B 209
B 179–96 Specification for Aluminum Alloys in Ingot Form for Castings from All Casting Processes, **02.02**
B 180 Redesignated F 180
B 181 Discontinued 1970; Method of Testing Effect of Controlled Atmospheres Upon Alloys in Electric Furnaces
B 182 Discontinued 1982; Method for Life Test of Electrical Contact Materials
B 183–79(1990) Practice for Preparation of Low-Carbon Steel for Electroplating, **02.05**
B 184 Discontinued 1969; Specification for Aluminum and Aluminum-Alloy Metal Arc-Welding Electrodes
B 185 Discontinued 1964; Method of Total Immersion Corrosion Test of Non-Ferrous Metals

B 268 Redesignated F 268
B 269 Redesignated F 269
B 270 Redesignated F 270
B 271–96 Specification for Copper-Base Alloy Centrifugal Castings, **02.01**
B 272–96 Specification for Copper Flat Products with Finished (Rolled or Drawn) Edges (Flat Wire and Strip), **02.01**
B 273 Discontinued 1957; Specification for Aluminum and Aluminum-Alloy Bars, Rods, and Shapes for Pressure Vessel Applications; Replaced by B 211, B 221, B 308/B 308M
B 274 Discontinued 1957; Specification for Aluminum and Aluminum-Alloy Pipe and Tube for Pressure Vessel Applications; Replaced by B 210
B 275–96 Practice for Codification of Certain Nonferrous Metals and Alloys, Cast and Wrought, **02.02**
B 276–91(1996)$^{\epsilon 1}$ Test Method for Apparent Porosity in Cemented Carbides, **02.05**
B 277–95 Test Method for Hardness of Electrical Contact Materials, **03.04**
B 278 Redesignated F 278
B 279–93 Test Method for Stiffness of Bare Soft Square and Rectangular Copper and Aluminum Wire for Magnet Wire Fabrication, **02.03**
B 280–95a Specification for Seamless Copper Tube for Air Conditioning and Refrigeration Field Service, **02.01**
B 281–88(1995) Practice for Preparation of Copper and Copper-Base Alloys for Electroplating and Conversion Coatings, **02.05**
B 282–83a(1995)$^{\epsilon 1}$ Specification for Sintered Brass Structural Parts, **02.05**
B 283–96 Specification for Copper and Copper-Alloy Die Forgings (Hot-Pressed), **02.01**
B 284 Discontinued 1991; Specification for Rosin Flux-Core Solder
B 285 Discontinued 1969; Specification for Aluminum and Aluminum-Alloy Welding Rods and Bare Electrodes
B 286–95 Specification for Copper Conductors for Use in Hookup Wire for Electronic Equipment, **02.03**
B 287 Discontinued 1988; Method of Acetic Acid-Salt Spray (Fog) Testing
B 288 Redesignated F 288
B 289 Redesignated F 289
B 290 Redesignated F 290
B 291 Discontinued 1992; Specification for Copper-Zinc-Manganese Alloy (Manganese Brass) Sheet and Strip
B 292 Discontinued 1973; Specification for Nickel-Tin Bronze Castings; Replaced by B 584
B 293 Discontinued 1985; Method of Subsieve Analysis of Granular Metal Powders by Air Classification
B 294–92 Method for Hardness Testing of Cemented Carbides, **02.05**
B 295 Discontinued 1969; Specification for Nickel and Nickel-Alloy Covered Welding Electrodes
B 296–96 Practice for Temper Designations of Magnesium Alloys, Cast and Wrought, **02.02**
B 297 Discontinued 1969; Specification for Tungsten Arc-Welding Electrodes
B 298–94 Specification for Silver-Coated Soft or Annealed Copper Wire, **02.03**
B 299–94 Specification for Titanium Sponge, **02.04**
B 300 Redesignated F 300
B 301–96 Specification for Free-Cutting Copper Rod and Bar [Metric], **02.01**
B 301M–96 Specification for Free-Cutting Copper Rod and Bar [Metric], **02.01**
B 302–97 Specification for Threadless Copper Pipe, **02.01**
B 303 Discontinued 1990; Specification for Copper-Infiltrated Sintered Carbon Steel Structural Parts; Replaced by B 783
B 304 Discontinued 1969; Specification for Nickel and Nickel-Alloy Bare Welding Rods and Electrodes
B 305 Discontinued 1986; Test Method for Maximum Loading Stress at Temperature of Thermostat Metals (Cantilever Beam Method)
B 306–96 Specification for Copper Drainage Tube (DWV), **02.01**
B 307 Discontinued 1968; Specification for Aluminum-Alloy Drawn Seamless Coiled Tubes for Special Purpose Applications; Replaced by B 210
B 308M Discontinued 1991; Replaced by B 308/B 308M
B 308/B308M–96 Specification for Aluminum-Alloy 6061-T6 Standard Structural Profiles, **02.02**
B 309 Discontinued 1964; Specification for High Density Iron, Sintered Metal Powder Structural Parts; Combined with B 310
B 310 Discontinued 1990; Specification for Sintered Carbon Steel Structural Parts; Replaced by B 783
B 311–93 Test Method for Density Determination for Powder Metallurgy (P/M) Materials Containing Less than Two Percent Porosity, **02.05**
B 312–96 Test Method for Green Strength for Compacted Metal Powder Specimens, **02.05**
B 313M Discontinued 1991; Replaced by B 313/B 313M
B 313/B313M–95 Specification for Aluminum and Aluminum-Alloy Round Welded Tubes, **02.02**
B 314 Discontinued 1994; Specification for Aluminum 1350 Wire for Communication Cable
B 315–93 Specification for Seamless Copper Alloy Pipe and Tube, **02.01**
B 316/B316M–96 Specification for Aluminum and Aluminum-Alloy Rivet and Cold-Heading Wire and Rods, **02.02**
B 317–96 Specification for Aluminum-Alloy Extruded Bar, Rod, Pipe, and Structural Profiles for Electrical Purposes (Bus Conductors), **02.02**
B 318 Discontinued 1963; Specification for Type A and Type B Aluminum-Alloy Drawn Annealed Seamless Coiled Tubes; Combined with B 307
B 319–91 Guide for Preparation of Lead and Lead Alloys for Electroplating, **02.05**
B 320–60(1990) Practice for Preparation of Iron Castings for Electroplating, **02.05**
B 321 Discontinued 1963; Recommended Practice for Dimension Standards for Projection Welding Contacts
B 322–85(1994) Practice for Cleaning Metals Prior to Electroplating, **02.05**
B 323 Discontinued 1990; Specification for Aluminum Wire, EC-H14 or -H24, for Electrical Purposes; Replaced by B 609
B 324–93 Specification for Aluminum Rectangular and Square Wire for Electrical Purposes, **02.03**
B 325 Discontinued 1965; Specification for Refined Secondary Lead
B 326 Discontinued 1991; Test Method for Resistance Characteristics of Microcontacts
B 327–95 Specification for Master Alloys Used in Making Zinc Die Casting Alloys, **02.04**
B 328–96 Test Method for Density, Oil Content, and Interconnected Porosity of Sintered Powder Metal Structural Parts and Oil-Impregnated Bearings, **02.05**
B 329–95 Test Method for Apparent Density of Metal Powders and Related Compounds Using the Scott Volumeter, **02.05**
B 330–88(1993)$^{\epsilon 1}$ Test Method for Average Particle Size of Powders of Refractory Metals and Their Compounds by the Fisher Sub-sieve Sizer, **02.05**
B 331–95 Test Method for Compressibility of Metal Powders in Uniaxial Compaction, **02.05**
B 332 Redesignated A 494
B 333–95a Specification for Nickel-Molybdenum Alloy Plate, Sheet, and Strip, **02.04**
B 334 Discontinued 1980; Specification for Nickel-Molybdenum-Chromium Alloy (UNS N10002) Plate and Sheet
B 335–95 Specification for Nickel-Molybdenum Alloy Rod, **02.04**
B 336 Discontinued 1980; Specification for Nickel-Molybdenum-Chromium Alloy (UNS N10002) Rod
B 337–95a Specification for Seamless and Welded Titanium and Titanium Alloy Pipe, **02.04**
B 338–95 Specification for Seamless and Welded Titanium and Titanium Alloy Tubes for Condensers and Heat Exchangers, **02.04**
B 339–93 Specification for Pig Tin, **02.04**
B 340 Discontinued 1991; Test Method for Surety of Make of Electrical Contact Materials
B 341–93 Specification for Aluminum-Coated (Aluminized) Steel Core Wire for Aluminum Conductors, Steel Reinforced (ACSR/AZ), **02.03**
B 341M–93 Specification for Aluminum-Coated (Aluminized) Steel Core Wire for Aluminum Conductors, Steel Reinforced (ACSR AZ) [Metric], **02.03**
B 342 Discontinued 1985; Test Method for Electrical Conductivity by Use of Eddy Currents; Replaced by E 1004
B 343–92 Practice for Preparation of Nickel for Electroplating with Nickel, **02.05**
B 344–92 Specification for Drawn or Rolled Nickel-Chromium and Nickel-Chromium-Iron Alloys for Electrical Heating Elements, **03.04**
B 345–96 Specification for Aluminum and Aluminum-Alloy Seamless Pipe and Seamless Extruded Tube for Gas and Oil Transmission and Distribution Piping Systems [Metric], **02.02**
B 345M–96 Specification for Aluminum and Aluminum-Alloy Seamless Pipe and Seamless Extruded Tube for Gas and Oil Transmission and Distribution Piping Systems [Metric], **02.02**
B 346 Discontinued 1966; Specification for Machinable High-Density Tungsten-Nickel-Copper Alloys
B 347 Discontinued 1992; Test Method for Hardness of Sintered Metal Friction Materials
B 348–95a Specification for Titanium and Titanium Alloy Bars and Billets, **02.04**
B 348–93 Specification for Zirconium Sponge and Other Forms of Virgin Metal for Nuclear Application, **02.04**
B 350/B350M–96 Specification for Zirconium and Zirconium Alloy Ingots for Nuclear Application, **02.04**
B 351–92 Specification for Hot-Rolled and Cold-Finished Zirconium and Zirconium Alloy Bars, Rod, and Wire for Nuclear Application, **02.04**
B 352–92 Specification for Zirconium and Zirconium Alloy Sheet, Strip, and Plate for Nuclear Application, **02.04**
B 353–95 Specification for Wrought Zirconium and Zirconium Alloy Seamless and Welded Tubes for Nuclear Service (Except Nuclear Fuel Cladding), **02.04**
B 354–93 Terminology Relating to Uninsulated Metallic Electrical Conductors, **02.03**
B 355–95 Specification for Nickel-Coated Soft or Annealed Copper Wire, **02.03**
B 356 Discontinued 1976; Specification for Zirconium and Zirconium Alloy Forgings and Extrusions for Nuclear Application
B 357 Discontinued 1987; Specification for Remelted Lithium Metal in Ingot Form
B 358 Discontinued 1980; Specification for Copper-Nickel Addition Alloy; Replaced by B 644
B 359–95 Specification for Copper and Copper-Alloy Seamless Condenser and Heat Exchanger Tubes with Integral Fins, **02.01**
B 359M–95 Specification for Copper and Copper-Alloy Seamless Condenser and Heat Exchanger Tubes with Integral Fins [Metric], **02.01**
B 360–95 Specification for Hard-Drawn Copper Capillary Tube for Restrictor Applications, **02.01**
B 361–95 Specification for Factory-Made Wrought Aluminum and Aluminum-Alloy Welding Fittings, **02.02**

C 105 Discontinued 1984; Specification for Ground Fire Clay as a Refractory Mortar for Laying-Up Fireclay Brick
C 106 Discontinued 1973; Specification for Refractories for Incinerators
C 107 Discontinued 1994; Method of Panel Spalling Testing High-Duty Fireclay Brick
C 108–46(1995) Symbols for Heat Transmission, **15.01**
C 109/C109M–95 Test Method for Compressive Strength of Hydraulic Cement Mortars (Using 2-in. or 50-mm Cube Specimens), **04.01**
C 110–96a Test Methods for Physical Testing of Quicklime, Hydrated Lime, and Limestone, **04.01**
C 111 Discontinued 1950; Specification for Sodium Silicate for Curing Concrete
C 112 Discontinued 1974; Methods of Sampling and Testing Structural Clay Tile; Combined with C 67
C 113–93 Test Method for Reheat Change of Refractory Brick, **15.01**
C 114–97 Test Methods for Chemical Analysis of Hydraulic Cement, **04.01**
C 115–96a Test Method for Fineness of Portland Cement by the Turbidimeter, **04.01**
C 116–90 Test Method for Compressive Strength of Concrete Using Portions of Beams Broken in Flexure, **04.02**
C 117–95 Test Method for Material Finer Than 75-μm (No. 200) Sieve in Mineral Aggregates by Washing, **04.02**
C 118–95 Specification for Concrete Pipe for Irrigation or Drainage, **04.05**
C 118M–95 Specification for Concrete Pipe for Irrigation or Drainage [Metric], **04.05**
C 119–97 Terminology Relating to Dimension Stone, **04.07**
C 120–90(1994) Test Methods of Flexure Testing of Slate (Modulus of Rupture, Modulus of Elasticity), **04.07**
C 121–90(1994) Test Method for Water Absorption of Slate, **04.07**
C 122 Discontinued 1994; Test Method for Panel Spalling Testing Super-Duty Fireclay Brick
C 123–96 Test Method for Lightweight Particles in Aggregate, **04.02**
C 124 Discontinued 1974; Method of Test for Flow of Portland-Cement Concrete by Use of the Flow Table
C 125–96 Terminology Relating to Concrete and Concrete Aggregates, **04.02**
C 126–96 Specification for Ceramic Glazed Structural Clay Facing Tile, Facing Brick, and Solid Masonry Units, **04.05**
C 127–88(1993)$^{\epsilon 1}$ Test Method for Specific Gravity and Absorption of Coarse Aggregate, **04.02**
C 128–93 Test Method for Specific Gravity and Absorption of Fine Aggregate, **04.02**
C 129–97 Specification for Nonloadbearing Concrete Masonry Units, **04.05**
C 130 Discontinued 1955; Specification for Lightweight Aggregates for Concrete; Replaced by C 330, C 331, C 332
C 131–96 Test Method for Resistance to Degradation of Small-Size Coarse Aggregate by Abrasion and Impact in the Los Angeles Machine, **04.02**
C 132 Discontinued 1944; Specification for Fire-Retardant Properties of Wood for Scaffolding and Shoring
C 133–96 Test Methods for Cold Crushing Strength and Modulus of Rupture of Refractories, **15.01**
C 134–95 Test Methods for Size, Dimensional Measurements, and Bulk Density of Refractory Brick and Insulating Firebrick, **15.01**
C 135–96 Test Method for True Specific Gravity of Refractory Materials by Water Immersion, **15.01**
C 136–96a Test Method for Sieve Analysis of Fine and Coarse Aggregates, **04.02**
C 137 Discontinued 1991; Specification for Solid Load-Bearing Concrete Masonry Units; Replaced by C 90
C 138–92 Test Method for Unit Weight, Yield, and Air Content (Gravimetric) of Concrete, **04.02**
C 139–97 Specification for Concrete Masonry Units for Construction of Catch Basins and Manholes, **04.05**
C 140–96b Test Methods of Sampling and Testing Concrete Masonry Units, **04.05**
C 141–96 Specification for Hydraulic Hydrated Lime for Structural Purposes, **04.01**
C 142–78(1990) Test Method for Clay Lumps and Friable Particles in Aggregates, **04.02**
C 143–90a Test Method for Slump of Hydraulic Cement Concrete, **04.02**
C 144–93 Specification for Aggregate for Masonry Mortar, **04.05**
C 145 Discontinued 1992; Specification for Load-Bearing Concrete Masonry Units; Replaced by C 90
C 146–94a Test Methods for Chemical Analysis of Glass Sand, **15.02**
C 147–86(1995) Test Methods for Internal Pressure Test on Glass Containers, **15.02**
C 148–95 Test Methods for Polirascopic Examination of Glass Containers, **15.02**
C 149–86(1995) Test Method for Thermal Shock Resistance of Glass Containers, **15.02**
C 150–97 Specification for Portland Cement, **04.01**
C 151–93a Test Method for Autoclave Expansion of Portland Cement, **04.01**
C 152 Redesignated E 152
C 153 Discontinued 1973; Specification for Refractories for Moderate Duty Stationary Boiler Service; Combined with C 64
C 154 Discontinued 1985; Method of Test for Warpage of Refractory Brick and Tile, or Deviation from Plane Surface
C 155–88(1992) Classification of Insulating Firebrick, **15.01**
C 156–95 Test Method for Water Retention by Concrete Curing Materials, **04.02**
C 157–93 Test Method for Length Change of Hardened Hydraulic-Cement Mortar and Concrete, **04.02**
C 158–95 Test Methods for Strength of Glass by Flexurermination of Modulus of Rupture), **15.02**
C 159–95 Specification for Vitrified Clay Filter Blocks, **04.05**
C 160 Discontinued 1960; Specification for Mortar for Unit Masonry
C 161 Discontinued
C 162–96a Terminology of Glass and Glass Products, **15.02**
C 163–88(1993)$^{\epsilon 1}$ Practice for Mixing Thermal Insulating Cement Samples, **04.06**
C 164 Discontinued 1962; Method of Test for Storage Density of Thermal Insulating Cement
C 165–95 Test Method for Measuring Compressive Properties of Thermal Insulations, **04.06**
C 166–87(1997) Test Methods for Covering Capacity and Volume Change Upon Drying of Thermal Insulating Cement, **04.06**
C 167–93 Test Methods for Thickness and Density of Blanket or Batt Thermal Insulations, **04.06**
C 168–90 Terminology Relating to Thermal Insulating Materials, **04.06**
C 169–92(1996) Test Methods for Chemical Analysis of Soda-Lime and Borosilicate Glass, **15.02**
C 170–90(1994) Test Method for Compressive Strength of Dimension Stone, **04.07**
C 171–97a Specification for Sheet Materials for Curing Concrete, **04.02**
C 172–90 Practice for Sampling Freshly Mixed Concrete, **04.02**
C 173–94a Test Method for Air Content of Freshly Mixed Concrete by the Volumetric Method, **04.02**
C 174–97 Test Method for Measuring Length of Drilled Concrete Cores, **04.02**
C 175 Discontinued 1971; Specification for Air-Entraining Portland Cement; Replaced by C 150
C 176 Discontinued 1973; Specification for Fireday Plastic Refractories for Boiler and Incinerator Services; Replaced by C 64
C 177–97 Test Method for Steady-State Heat Flux Measurements and Thermal Transmission Properties by Means of the Guarded-Hot-Plate Apparatus, **04.06**
C 178 Discontinued 1973; Specification for Air-Setting Refractory Mortar (Wet Type) for Boiler and Incinerator Services
C 179–85(1994) Test Method for Drying and Firing Linear Change of Refractory Plastic and Ramming Mix Specimens, **15.01**
C 180 Discontinued 1986; Method of Panel Spalling Testing Fireclay Plastic Refractories
C 181–91 Test Method for Workability Index of Fireclay and High-Alumina Plastic Refractories, **15.01**
C 182–88(1993)$^{\epsilon 1}$ Test Method for Thermal Conductivity of Insulating Firebrick, **15.01**
C 183–95a Practice for Sampling and the Amount of Testing of Hydraulic Cement, **04.01**
C 184–94 Test Method for Fineness of Hydraulic Cement by the 150-μm (No. 100) and 75-μm (No. 200) Sieves, **04.01**
C 185–95 Test Method for Air Content of Hydraulic Cement Mortar, **04.01**
C 186–97 Test Method for Heat of Hydration of Hydraulic Cement, **04.01**
C 187–86(1991)$^{\epsilon 1}$ Test Method for Normal Consistency of Hydraulic Cement, **04.01**
C 188–95 Test Method for Density of Hydraulic Cement, **04.01**
C 189 Discontinued 1957; Method of Test for Soundness of Hydraulic Cement Over Boiling Water (Pat Test) of Portland Cement
C 190 Discontinued 1991; Test Method for Tensile Strength of Hydraulic Cement Mortars
C 191–92 Test Method for Time of Setting of Hydraulic Cement by Vicat Needle, **04.01**
C 192/C192M–95 Practice for Making and Curing Concrete Test Specimens in the Laboratory, **04.02**
C 193 Discontinued 1977; Specification for Magnesia Thermal Insulating Cement
C 194 Discontinued 1977; Specification for Asbestos Thermal Insulating and Finishing Cement
C 195–95 Specification for Mineral Fiber Thermal Insulating Cement, **04.06**
C 196–93 Specification for Expanded or Exfoliated Vermiculite Thermal Insulating Cement, **04.06**
C 197 Discontinued 1978; Specification for Diatomaceous Silica Thermal Insulating Cement
C 198–91(1996)$^{\epsilon 1}$ Test Method for Cold Bonding Strength of Refractory Mortar, **15.01**
C 199–84(1994)$^{\epsilon 1}$ Test Method for Pier Test for Refractory Mortars, **15.01**
C 200 Discontinued 1973; Specification for Extra Strength Clay Pipe; Replaced by C 700
C 201–86$^{\epsilon 1}$ Test Method for Thermal Conductivity of Refractories, **15.01**
C 202–93 Test Method for Thermal Conductivity of Refractory Brick, **15.01**
C 203–92 Test Methods for Breaking Load and Flexural Properties of Block-Type Thermal Insulation, **04.06**
C 204–96a Test Method for Fineness of Hydraulic Cement by Air Permeability Apparatus, **04.01**
C 205 Discontinued 1968; Specification for Portland Blast-Furnace Cement; Replaced by C 595
C 206–84(1992)$^{\epsilon 1}$ Specification for Finishing Hydrated Lime, **04.01**
C 207–91(1992)$^{\epsilon 1}$ Specification for Hydrated Lime for Masonry Purposes, **04.01**
C 208–95 Specification for Cellulosic Fiber Insulating Board, **04.06**
C 209–92 Test Methods for Cellulosic Fiber Insulating Board, **04.06**

D 1241–68(1994) Specification for Materials for Soil-Aggregate Subbase, Base, and Surface Courses, **04.08**
D 1242–95a Test Methods for Resistance of Plastic Materials to Abrasion, **08.01**
D 1243–95 Test Method for Dilute Solution Viscosity of Vinyl Chloride Polymers, **08.01**
D 1244–81(1996)ε1 Practice for Designation of Yarn Construction, **07.01**
D 1245–84(1994)ε1 Practice for Examination of Water-Formed Deposits by Chemical Microscopy, **11.02**
D 1246–95 Test Method for Iodide and Bromide in Water, **11.01**
D 1247 Discontinued 1987; Method of Sampling Manufactured Gas
D 1248–84(1989)ε1 Specification for Polyethylene Plastics Molding and Extrusion Materials, **08.01**
D 1249–92 Specification for Octyl Ortho-Phthalate Ester Plasticizers, **08.01**
D 1250–80(1990)ε1 Guide for Petroleum Measurement Tables, (Description only; tables published separately in 12 volumes), **05.01**
D 1251–94 Test Method for Water Vapor Permeability of Packages by Cycle Method, **15.09**
D 1252–95 Test Methods for Chemical Oxygen Demand (Dichromate Oxygen Demand) of Water, **11.02**
D 1253–86(1996) Test Methods for Residual Chlorine in Water, **11.01**
D 1254 Discontinued 1981; Method of Test for Nitrite Ion in Water
D 1255 Discontinued 1968; Methods of Test for Sulfides in Industrial Water and Industrial Waste Water
D 1256 Discontinued 1967; Scheme for Analysis of Industrial Water and Industrial Waste Water
D 1257–90(1993) Specification for High-Gravity Glycerin, **06.04**
D 1258–95 Test Method for High-Gravity Glycerin, **06.04**
D 1259–85(1994) Test Methods for Nonvolatile Content of Resin Solutions, **06.01**
D 1260 Discontinued 1966; Method of Test for Color Difference Using the Hunter Multipurpose Reflectometer; Combined with D 2244
D 1261 Discontinued 1984; Method of Test for Effect of Grease on Copper
D 1262 Discontinued 1991; Test Method for Lead in New and Used Greases
D 1263–94 Test Method for Leakage Tendencies of Automotive Wheel Bearing Greases, **05.01**
D 1264–96 Test Method for Determining the Water Washout Characteristics of Lubricating Greases, **05.01**
D 1265–92 Practice for Sampling Liquefied Petroleum (LP) Gases (Manual Method), **05.01**
D 1266–91(1995) Test Method for Sulfur in Petroleum Products (Lamp Method), **05.01**
D 1267–95 Test Method for Vapor Pressure of Liquefied Petroleum (LP) Gases (LP-Gas Method), **05.01**
D 1268 Discontinued 1975; Method of Test for Unsaturated Light Hydrocarbons (Silver-Mercuric Nitrate Method)
D 1269 Discontinued 1975; Method of Test for Lead Antiknock Compounds in Gasoline (Polarographic Method)
D 1270 Discontinued 1959; Method of Test for Dimensional Changes of Paper with Changes in Moisture Conditions
D 1271 Discontinued 1970; Specification for Copperized Chromated Zinc Chloride
D 1272–56(1993)ε1 Specification for Pentachlorophenol, **04.10**
D 1273 Discontinued 1970; Methods for Chemical Analysis of Copperized Chromated Zinc Chloride
D 1274–95 Test Methods for Chemical Analysis of Pentachlorophenol, **04.10**
D 1275–96a Test Method for Corrosive Sulfur in Electrical Insulating Oils, **10.03**
D 1276 Discontinued 1985; Method of Test for Water Vapor Transmission of Shipping Containers by Cycle Method
D 1277 Discontinued 1972; Specification for Nonrigid Thermoplastic Compounds for Automotive and Aeronautical Applications
D 1278–91a Test Methods for Rubber from Natural Sources—Chemical Analysis, **09.01**
D 1279–82(1994) Test Method for Buffering Action of Metal Cleaners, **15.04**
D 1280–89(1995) Test Method of Total Immersion Corrosion Test for Soak Tank Metal Cleaners, **15.04**
D 1281 Discontinued 1989; Test Method for Rinsing Properties of Metal Cleaners
D 1282–96 Test Method for Resistance to Airflow as an Indication of Average Fiber Diameter of Wool Top, Card Sliver, and Scoured Wool, **07.01**
D 1283–85(1995) Test Method for Alkali-Solubility of Wool, **07.01**
D 1284 Discontinued 1991; Test Methods for Relaxation and Consolidation Dimensional Changes of Stabilized Knit Wool Fabrics
D 1285 Discontinued 1967; Tolerances for Yarns Containing Wool; Replaced by D 2644, D 2645
D 1286 Discontinued 1983; Method of Test for Effect of Mold Contamination on Permanence of Adhesives Preparations and Adhesives Bonds; Replaced by D 4300
D 1287–91 Test Method for pH of Engine Coolants and Antirusts, **15.05**
D 1288 Discontinued 1985; Method of Test for Total Ash and Silica in Water-Emulsion Polishes
D 1289 Discontinued 1969; Method of Test for Nonvolatile Matter (Total Solids) in Water-Emulsion Waxes; Replaced by D 2834
D 1290–95 Test Method for Sediment in Water-Emulsion Polishes by Centrifuge, **15.04**
D 1291–89(1994)ε1 Practice for Estimation of Chlorine Requirement or Demand of Water, or Both, **11.02**
D 1292–86(1995)ε1 Test Method for Odor in Water, **11.01**
D 1293–95 Test Methods for pH of Water, **11.01**
D 1294–95a Test Method for Tensile Strength and Breaking Tenacity of Wool Fiber Bundles 1-in. (25.4-mm) Gage Length, **07.01**
D 1295 Discontinued 1978; Method of Test for Wrinkle Recovery of Textile Fabrics Using the Vertical Strip Apparatus
D 1296–93(1996) Test Method for Odor of Volatile Solvents and Diluents, **06.04**
D 1297 Discontinued 1967; Method of Test for No-Dirt-Retention Time of Traffic Paint
D 1298–85(1990)ε1 Test Method for Density, Relative Density (Specific Gravity), or API Gravity of Crude Petroleum and Liquid Petroleum Products by Hydrometer Method, **05.01**
D 1299 Discontinued 1992; Test Method for Shrinkage of Molded and Laminated Thermosetting Plastics at Elevated Temperature
D 1300 Discontinued 1963; Specification and Methods of Test for Laminated Thermosetting Decorative Sheets
D 1301–91 Test Methods for Chemical Analysis of White Lead Pigments, **06.03**
D 1302 Discontinued 1968; Method for Analysis of Carbureted Water Gas by the Mass Spectrometer
D 1303 Discontinued 1986; Method of Test for Total Chlorine in Vinyl Chloride Polymers and Copolymers
D 1304–93 Test Methods for Adhesives Relative to Their Use as Electrical Insulation, **15.06**
D 1305–87(1993)ε1 Specification for Electrical Insulating Paper and Paperboard—Sulfate (Kraft) Layer Type, **10.01**
D 1306–88 Test Method for Phthalic Anhydride Content of Alkyd Resins and Esters Containing Other Dibasic Acids (Gravimetric), **06.03**
D 1307 Discontinued 1982; Method of Test for Phthalic Anhydride Content of Alkyd Resins and Esters Containing Other Dibasic Acids (Spectrophotometric)
D 1308–87 Test Method for Effect of Household Chemicals on Clear and Pigmented Organic Finishes, **06.02**
D 1309–93 Test Method for Settling Properties of Traffic Paints During Accelerated Storage, **06.02**
D 1310–86(1990)ε1 Test Method for Flash Point and Fire Points of Liquids by Tag Open-Cup Apparatus, **06.01**
D 1311 Discontinued 1968; Method of Test for Viscosity Reduction Power of Hydrocarbon Solvents
D 1312–93 Test Methods for Apparent Free Phenols in Synthetic Phenolic Resins or Solutions Used for Coating Purposes, **06.03**
D 1313 Discontinued 1988; Method of Test for Sludge Formation in Mineral Transformer Oil by High-Pressure Oxidation Bomb
D 1314 Discontinued 1965; Method of Test for Sludge Formation in Mineral Transformer Oil by Sludge Accumulation; Replaced by D 2440
D 1315 Discontinued 1981; Method of Test for Water in Insulating Oils by Extraction
D 1316–93(1996) Test Method for Fineness of Grind of Printing Inks by the NPIRI Grindometer, **06.02**
D 1317 Discontinued 1994; Test Method for Chlorine in New and Used Lubricants (Sodium Alcoholate Method)
D 1318 Discontinued 1992; Test Method for Sodium in Residual Fuel Oil (Flame Photometric Method)
D 1319–95a Test Method for Hydrocarbon Types in Liquid Petroleum Products by Fluorescent Indicator Adsorption, **05.01**
D 1320 Discontinued 1991; Test Method for Tensile Strength of Paraffin Wax
D 1321–92 Test Method for Needle Penetration of Petroleum Waxes, **05.01**
D 1322–96 Test Method for Smoke Point of Aviation Turbine Fuels, **05.01**
D 1323 Discontinued 1980; Methods of Test for Mercaptan Sulfur in Aviation Turbine Fuels; Replaced by D 3227
D 1324–83(1993) Specification for Modified Wood, **04.10**
D 1325–94 Specification for Ammoniacal Copper Arsenate and Ammoniacal Copper Zinc Arsenate, **04.10**
D 1326–94 Test Method for Chemical Analysis of Ammoniacal Copper Arsenate and Ammoniacal Copper Zinc Arsenate, **04.10**
D 1327–97 Specification for Bitumen-Saturated Woven Burlap Fabrics Used in Roofing and Waterproofing, **04.04**
D 1328 Discontinued 1992; Test Method for Staining Properties of Asphalt Replaced by D 2746
D 1329–88(1993)ε1 Test Method for Evaluating Rubber Property—Retraction at Lower Temperatures (TR Test), **09.01**
D 1330–85(1995)ε1 Specification for Rubber Sheet Gaskets, **09.02**
D 1331–89(1995) Test Methods for Surface and Interfacial Tension of Solutions of Surface-Active Agents, **15.04**
D 1332 Discontinued 1972; Methods of Test for Build-Up and Spread of Glass Yarn As Wrap (Serving) or Braid Over Electrical Conductors; Replaced by D 668
D 1333 Discontinued 1960; Methods of Testing Elastic Fabrics; Replaced by D 1775
D 1334–96 Test Method for Wool Content of Raw Wool—Commercial Scale, **07.01**
D 1335 Discontinued 1995; Test Method for Tuft Bind of Pile Floor Coverings
D 1336 Discontinued 1995; Test Method for Distortion of Yarn in Woven Fabrics
D 1337–96 Test Method for Storage Life of Adhesives by Consistency and Bond Strength, **15.06**
D 1338–91 Test Method for Working Life of Liquid or Paste Adhesives by Consistency and Bond Strength, **15.06**
D 1339 Discontinued 1990; Test Methods for Sulfite Ion in Water
D 1340 Discontinued 1971; Method of Test for Oily Matter in Industrial Waste Water

D 1836–91(1994) Specification for Commercial Hexanes, **06.04**
D 1837–94 Test Method for Volatility of Liquefied Petroleum (LP) Gases, **05.01**
D 1838–91(1996)$^{\varepsilon 1}$ Test Method for Copper Strip Corrosion by Liquefied Petroleum (LP) Gases, **05.01**
D 1839–91(1995) Test Method for Amyl Nitrate in Diesel Fuels, **05.01**
D 1840–96 Test Method for Naphthalene Hydrocarbons in Aviation Turbine Fuels by Ultraviolet Spectrophotometry, **05.01**
D 1841–63(1992)$^{\varepsilon 1}$ Specification for Distilled Coconut Fatty Acids, **06.03**
D 1842–63(1992)$^{\varepsilon 1}$ Specification for Distilled Corn Fatty Acids, **06.03**
D 1843–63(1992)$^{\varepsilon 1}$ Specification for Fractionated and Distilled Cottonseed Fatty Acids, **06.03**
D 1844–86(1991)$^{\varepsilon 1}$ Test Methods for Chemical Analysis of Basic Lead Silicochromate, **06.03**
D 1845–86(1991)$^{\varepsilon 1}$ Test Methods for Chemical Analysis of Strontium Chromate Pigment, **06.03**
D 1846 Discontinued 1966; Method of Test for Water-Soluble Matter in Iron Oxide Pigments by Specific Resistance Method; Combined with D 2448
D 1847–93 Test Methods for Total Chlorine Content of Epoxy Resins, **06.03**
D 1848–88(1993) Classification for Reporting Paint Film Failures Characteristic of Exterior Latex Paints, **06.02**
D 1849–95 Test Method for Package Stability of Paint, **06.02**
D 1850 Discontinued 1991; Specification for Concrete Joint Sealer
D 1851 Discontinued 1991; Methods of Testing Concrete Joint Sealer
D 1852 Discontinued 1991; Specification for Jet-Fuel-Resistant Concrete Joint Sealer, Cold-Application Elastic Type
D 1853 Discontinued 1991; Methods of Testing Jet-Fuel-Resistant Concrete Joint Sealer for Concrete, Cold-Application Elastic Type
D 1854–96 Specification for Jet-Fuel-Resistant Concrete Joint Sealer, Hot-Applied Elastic Type, **04.03**
D 1855 Discontinued 1996; Test Methods for Jet-Fuel Resistant Concrete Joint Sealer, Hot-Poured Elastic Type
D 1856–95a Test Method for Recovery of Asphalt from Solution by Abson Method, **04.03**
D 1857–87(1994) Test Method for Fusibility of Coal and Coke Ash, **05.05**
D 1858–63(1994)$^{\varepsilon 1}$ Specification for Creosote-Petroleum Solution, **04.10**
D 1859–71(1992)$^{\varepsilon 1}$ Specification for Petroleum for Blending with Creosote, **04.10**
D 1860–95 Test Method for Moisture and Creosote-Type Preservative in Wood, **04.10**
D 1861 Discontinued 1992; Specification for Homogeneous Bituminized Fiber Drain and Sewer Pipe
D 1862 Discontinued 1992; Specification for Laminated-Wall Bituminized Fiber Drain and Sewer Pipe
D 1863–93(1996) Specification for Mineral Aggregate Used on Built-Up Roofs, **04.04**
D 1864–89(1994)$^{\varepsilon 1}$ Test Method for Moisture in Mineral Aggregate Used on Built-Up Roofs, **04.04**
D 1865–89(1994)$^{\varepsilon 1}$ Test Method for Hardness of Mineral Aggregate Used on Built-Up Roofs, **04.04**
D 1866 Discontinued 1991; Test Method for Translucency of Mineral Aggregate Used on Built-Up Roofs
D 1867–96 Specification for Copper-Clad Thermosetting Laminates for Printed Wiring, **10.01**
D 1868–93 Test Method for Detection and Measurement of Partial Discharge (Corona) Pulses in Evaluation of Insulation Systems, **10.01**
D 1869–95 Specification for Rubber Rings for Asbestos-Cement Pipe, **09.02**
D 1870–91 Practice for Elevated Temperature Aging Using a Tubular Oven, **08.01**
D 1871–94 Test Methods for Adhesion of Single-Filament Steel Wire to Rubber, **07.01**
D 1872 Discontinued 1991; Method of Testing Rubber Chemical—Free 2-Mercaptobenzothiazole in Benzothiazyl Disulfide; Replaced by D 5044
D 1873 Discontinued 1991; Method of Testing Rubber Chemical—Total 2-Mercaptobenzothiazole in Benzothiazyl Disulfide; Replaced by D 1051
D 1874–62(1993)$^{\varepsilon 1}$ Specification for Water- or Solvent-Soluble Liquid Adhesives for Automatic Machine Sealing of Top Flaps of Fiberboard Shipping Cases, **15.06**
D 1875–95 Test Method for Density of Adhesives in Fluid Form, **15.06**
D 1876–95 Test Method for Peel Resistance of Adhesives (T-Peel Test), **15.06**
D 1877 Discontinued 1985; Method of Test for Permanence of Adhesive-Bonded Joints in Plywood Under Mold Conditions
D 1878 Discontinued 1970; Method of Test for Pressure-Sensitive Tack of Adhesives
D 1879–70(1994) Practice for Exposure of Adhesive Specimens to High-Energy Radiation, **15.06**
D 1880 Discontinued 1975; Recommended Practice for Selection of Engine Antifreezers for Use in Automotive Cooling Systems, Ethylene Glycol and Methanol Types; Replaced by D 3306
D 1881–96 Test Method for Foaming Tendencies of Engine Coolants in Glassware, **15.05**
D 1882–96 Test Method for Effect of Cooling System Chemical Solutions on Organic Finishes for Automotive Vehicles, **15.05**
D 1883–94 Test Method for CBR (California Bearing Ratio) of Laboratory-Compacted Soils, **04.08**
D 1884 Discontinued 1968; Methods of Test for Acidity and Alkalinity of Industrial Water; Replaced by D 1067
D 1885 Discontinued 1962; Method of Test for Chloride Ion in High-Purity Industrial Water; Combined with D 512
D 1886–94 Test Methods for Nickel in Water, **11.01**
D 1887 Discontinued 1962; Method of Test for Sodium in High-Purity Industrial Water by Flame Photometry
D 1888 Discontinued 1991; Test Methods for Particulate and Dissolved Matter, Solids, or Residue in Water
D 1889–94 Test Method for Turbidity of Water, **11.01**
D 1890–96 Test Method for Beta Particle Radioactivity of Water, **11.02**
D 1891 Discontinued 1971; Method of Test for Hexane-Extractable Matter in Industrial Waste Water
D 1892 Discontinued 1987; Specification for Styrene-Butadiene Molding and Extrusion Materials; Replaced by D 4549
D 1893 Discontinued 1991; Test Method for Blocking of Plastic Film
D 1894–95 Test Method for Static and Kinetic Coefficients of Friction of Plastic Film and Sheeting, **08.01**
D 1895–96 Test Methods for Apparent Density, Bulk Factor, and Pourability of Plastic Materials, **08.01**
D 1896–92a Practice for Transfer Molding Test Specimens of Thermosetting Compounds, **08.01**
D 1897 Discontinued 1992; Practice for Injection Molding Test Specimens of Thermoplastic Molding and Extrusion Materials; Replaced by D 3641
D 1898–68(1989) Practice for Sampling of Plastics, **08.01**
D 1899 Discontinued 1977; Method of Test for Mass Concentration of Particulate Matter in the Atmosphere (Continuous-Measurement Light-Scattering Method)
D 1900–94 Practice for Carbon Black—Sampling Bulk Shipments, **09.01**
D 1901–95 Test Method for Relative Evaporation Time of Halogenated Organic Solvents and Their Admixtures, **15.05**
D 1902 Discontinued 1987; Method of Test for Approximate Acidity and Polar Contamination in Used Mineral Transformer Oil by Spot Tests
D 1903–96 Test Method for Coefficient of Thermal Expansion of Electrical Insulating Liquids of Petroleum Origin, and Askarels, **10.03**
D 1904 Discontinued 1969; Method of Test for Oxidation Characteristics of Mineral Transformer Oil
D 1905 Discontinued 1978; Method of Test for Dimensional Changes in Laundering of Woven or Knitted Textiles
D 1906 Discontinued 1968; Method of Test for Estimation of Effective Gage Length by Evaluation of Clamp Error in Single Fiber Testing
D 1907–97 Test Method for Yarn Number by the Skein Method, **07.01**
D 1908–89 Test Method for Needle-Related Damage Due to Sewing in Woven Fabrics, **07.01**
D 1909–96 Table of Commercial Moisture Regains for Textile Fibers, **07.01**
D 1910 Discontinued 1982; Methods of Test for Construction Characteristics of Woven Fabrics; Replaced by D 3773, D 3774, D 3775, D 3776, D 3882, D 3883
D 1911 Discontinued 1980; Specification for Asbestos-Cement Shingle Blanks to be Used as Panels in Weathering Tests of Exterior Architectural Paints
D 1912–93 Test Method for Cold-Crack Resistance of Upholstery Leather, **15.04**
D 1913–63(1993)$^{\varepsilon 1}$ Test Method for Resistance to Wetting of Garment-Type Leathers (Spray Test), **15.04**
D 1914–95 Practice for Conversion Units and Factors Relating to Sampling and Analysis of Atmospheres, **11.03**
D 1915 Discontinued 1996; Test Method for Chromatographic Analysis of Chemically Refined Cellulose
D 1916–93 Test Method for Penetration of Adhesives, **15.06**
D 1917–92 Test Methods for Rubber Property—Shrinkage of Raw and Compounded Hot-Polymerized Styrene-Butadiene Rubber (SBR), **09.01**
D 1918–95 Test Method for Asbestos Content of Asbestos Textiles, **04.05**
D 1919 Discontinued 1968; Specification for Glass-Fiber Reinforced Thermoset Corrugated Structural Plastics Panel
D 1920 Discontinued 1982; Recommended Practice for Determining Light Dosage in Carbon-Arc Light Aging Apparatus
D 1921–96 Test Methods for Particle Size (Sieve Analysis) of Plastic Materials, **08.01**
D 1922–94a Test Method for Propagation Tear Resistance of Plastic Film and Thin Sheeting by Pendulum Method, **08.01**
D 1923 Discontinued 1973; Method of Test for Tensile Properties of Thin Plastic Sheeting Using the Inclined Plane Testing Machine
D 1924 Redesignated G 21
D 1925 Discontinued 1995; Test Method for Yellowness Index of Plastics
D 1926–95 Test Methods for Carboxyl Content of Cellulose, **06.03**
D 1927 Discontinued 1994; Specification for Rigid Poly(Vinyl Chloride) Plastic Sheet
D 1928–96 Practice for Preparation of Compression-Molded Polyethylene Test Sheets and Test Specimens, **08.01**
D 1929–96 Test Method for Ignition Properties of Plastics, **08.01**
D 1930 Discontinued 1986; Specification for Kraft Dielectric Tissue, Capacitor Grade
D 1931–94 Specification for Fully Cured Silicone Rubber-Coated Glass Fabric and Tapes for Electrical Insulation, **10.01**
D 1932–96 Test Method for Thermal Endurance of Flexible Electrical Insulating Varnishes, **10.01**
D 1933–97 Specification for Nitrogen Gas as an Electrical Insulating Material, **10.03**
D 1934–95 Test Method for Oxidative Aging of Electrical Insulating Petroleum Oils by Open-Beaker Method, **10.03**
D 1935 Discontinued 1985; Method of Test for Steam Emulsion of Electrical Insulating Oils of Petroleum Origin
D 1936 Discontinued 1987; Method of Test for Thermal Stability of Chlorinated Aromatic Hydrocarbons (Askarels)

D 1937–95 Test Method for Carbon Black, Pelleted—Mass Strength, **09.01**
D 1938–94 Test Method for Tear Propagation Resistance of Plastic Film and Thin Sheeting by a Single-Tear Method, **08.01**
D 1939–94 Practice for Determining Residual Stresses in Extruded or Molded Acrylonitrile-Butadiene-Styrene (ABS) Parts by Immersion in Glacial Acetic Acid, **08.01**
D 1940 Discontinued 1970; Method of Test for Porosity of Rigid Cellular Plastics
D 1941–91(1996) Test Method for Open Channel Flow Measurement of Water with the Parshall Flume, **11.01**
D 1942 Discontinued 1990; Test Method for Morpholine in Water; Replaced by D 4983
D 1943–96 Test Method for Alpha Particle Radioactivity of Water, **11.02**
D 1944 Discontinued 1970; Method of Test for Porosity of Rigid Cellular Plastics
D 1945–96 Test Method for Analysis of Natural Gas by Gas Chromatography, **05.05**
D 1946–90(1994)$^{\epsilon 1}$ Practice for Analysis of Reformed Gas by Gas Chromatography, **05.05**
D 1947 Discontinued 1996; Test Method for Load-Carrying Capacity of Petroleum Oil and Synthetic Fluid Gear Lubricants
D 1948 Discontinued 1969; Method of Test for Knock Characteristics of Motor Fuels Above 100 Octane Number by the Motor Method; Replaced by D 2700
D 1949 Discontinued 1991; Test Method for Separation of Tetraethyllead and Tetramethyllead in Gasoline
D 1950–86(1995)$^{\epsilon 1}$ Test Method for Acetone Tolerance of Heat-Bodied Drying Oils, **06.03**
D 1951–86(1995)$^{\epsilon 1}$ Test Method for Ash in Drying Oils and Fatty Acids, **06.03**
D 1952–86(1995)$^{\epsilon 1}$ Test Method for Quantitative Determination of Break in Drying Oils, **06.03**
D 1953 Discontinued 1980; Method of Test for Drying Properties of Drying Oils; Replaced by D 1640
D 1954–86(1995)$^{\epsilon 1}$ Test Method for Foots in Raw Linseed Oil (Volumetric Method), **06.03**
D 1955–85(1995) Test Method for Gel Time of Drying Oils, **06.03**
D 1956 Discontinued 1975; Method of Test for Heat Bodying Rate of Drying Oils; Replaced by D 555
D 1957–86(1995)$^{\epsilon 1}$ Test Method for Hydroxyl Value of Fatty Oils and Acids, **06.03**
D 1958–86(1995)$^{\epsilon 1}$ Test Method for Chloroform Insoluble Matter in Oiticica Oil, **06.03**
D 1959–85(1989)$^{\epsilon 1}$ Test Method for Iodine Value of Drying Oils and Fatty Acids, **06.03**
D 1960–86(1995)$^{\epsilon 1}$ Test Method for Loss on Heating of Drying Oils, **06.03**
D 1961 Discontinued 1975; Method of Test for Maleic Diene Value of Drying Oils; Replaced by D 1358
D 1962–85(1995) Test Method for Saponification Value of Drying Oils, Fatty Acids, and Polymerized Fatty Acids, **06.03**
D 1963–85(1989)$^{\epsilon 1}$ Test Method for Specific Gravity of Drying Oils, Varnishes, Resins, and Related Materials at 25/25°C, **06.03**
D 1964–85(1995)$^{\epsilon 1}$ Test Method for Tung Oil Quality, **06.03**
D 1965–87(1991)$^{\epsilon 1}$ Test Method for Unsaponifiable Matter in Drying Oils, Fatty Acids, and Polymerized Fatty Acids, **06.03**
D 1966–69(1991)$^{\epsilon 1}$ Test Method for Foots in Raw Linseed Oil (Gravimetric Method), **06.03**
D 1967–86(1995)$^{\epsilon 1}$ Test Method for Color After Heating of Drying Oils, **06.03**
D 1968–96a Terminology Relating to Paper and Paper Products, **15.09**
D 1969–91(1996)$^{\epsilon 1}$ Specification for 2-Ethylhexanol (Synthetic), **06.04**
D 1970–97 Specification for Self-Adhering Polymer Modified Bituminous Sheet Materials Used as Steep Roofing Underlayment for Ice Dam Protection, **04.04**
D 1971–95 Practices for Digestion of Samples for Determination of Metals by Flame Atomic Absorption or Plasma Emission Spectroscopy, **11.01**
D 1972–94 Practice for Generic Marking of Plastic Products, **08.01**
D 1973–91 Guide for Design of a Liner System for Containment of Wastes, **11.04**
D 1974–94a Practice for Methods of Closing, Sealing, and Reinforcing Fiberboard Boxes, **15.09**
D 1975–95 Test Method for Environmental Stress Crack Resistance of Plastic Injection Molded Open Head Pails, **15.09**
D 1976–96 Test Method for Elements in Water by Inductively-Coupled Argon Plasma Atomic Emission Spectroscopy, **11.01**
D 1977–91 Test Method for Nickel and Vanadium in FCC Equilibrium Catalysts by Hydrofluoric/Sulfuric Acid Decomposition and Atomic Spectroscopic Analysis, **05.03**
D 1978–91 Guide for Analysis of Electrocoat Bath Samples, **06.01**
D 1979–91 Test Method for Free Formaldehyde Content of Amino Resins, **06.03**
D 1980–87(1991)$^{\epsilon 1}$ Test Method for Acid Value of Fatty Acids and Polymerized Fatty Acids, **06.03**
D 1981–86(1995)$^{\epsilon 1}$ Test Method for Color After Heating of Fatty Acids, **06.03**
D 1982–85(1995) Test Method for Titer of Fatty Acids, **06.03**
D 1983–90(1995)$^{\epsilon 1}$ Test Method for Fatty Acid Composition by Gas-Liquid Chromatography of Methyl Esters, **06.03**
D 1984–69(1988) Specification for Tall Oil Fatty Acids, **06.03**
D 1985–91(1997) Practice for Preparing Concrete Blocks for Testing Sealants, for Joints and Cracks, **04.03**
D 1986–91(1995)$^{\epsilon 1}$ Test Method for Determining the Apparent Viscosity of Polyethylene Wax, **15.04**
D 1987–95 Test Method for Biological Clogging of Geotextile or Soil/Geotextile Filters, **04.09**
D 1988–91(1995)$^{\epsilon 1}$ Test Method for Mercaptans in Natural Gas Using Length-of-Stain Detector Tubes, **05.05**
D 1989–96 Test Method for Gross Calorific Value of Coal and Coke by Microprocessor Controlled Isoperibol Calorimeters, **05.05**
D 1990–96a Practice for Establishing Allowable Properties for Visually-Graded Dimension Lumber from In-Grade Tests of Full-Size Specimens, **04.10**
D 1991–96 Test Method for Rubber Chemicals— 2-Mercaptobenzothiazole (MBT) Assay, **09.01**
D 1992–91 Practice for Testing Synthetic Plasticizers Used in Rubber, **09.01**
D 1993–91 Test Method for Precipitated Silica-Surface Area by Multipoint B.E.T. Nitrogen Adsorption, **09.01**
D 1994–95 Test Method for Determination of Acid Numbers of Hot-Melt Adhesives, **15.06**
D 1995–92 Test Methods for Multi-Modal Strength Testing of Autohesives (Contact Adhesives), **15.06**
D 1996–92 Test Method for Determination of Phenolic Antioxidants and Erucamide Slip Additives in Low Density Polyethylene Using Liquid Chromatography (LC), **08.01**
D 1997–91 Test Method for Laboratory Determination of the Fiber Content of Peat Samples by Dry Mass, **04.08**
D 1998–96 Specification for Polyethylene Upright Storage Tanks, **08.01**
D 1999–96a Guide for Selection of Specimens and Test Parameters for International Commerce, **08.01**
D 2000–96 Classification System for Rubber Products in Automotive Applications, **09.02**
D 2001–92 Test Method for Dependanization of Gasoline and Naphthas, **05.01**
D 2002–93 Test Method for Isolation of Representative Saturates Fraction from Low-Olefinic Petroleum Naphthas, **05.01**
D 2003–93 Test Method for Isolation of Representative Saturates Fraction from High-Olefinic Petroleum Naphthas, **05.01**
D 2004 Discontinued 1984; Method of Test for Modulus of Rupture of Petroleum Wax
D 2005 Discontinued 1986; Method of Test for Sealing Strength of Petroleum Wax
D 2006 Discontinued 1976; Method of Test for Characteristic Groups in Rubber Extender and Processing Oils by the Precipitation Method
D 2007–93 Test Method for Characteristic Groups in Rubber Extender and Processing Oils and Other Petroleum-Derived Oils by the Clay-Gel Absorption Chromatographic Method, **05.01**
D 2009 Discontinued 1995; Practice for Collection by Filtration and Determination of Mass, Number, and Optical Sizing of Atmospheric Particulates
D 2010/D2010M–93 Test Methods for Evaluation of Total Sulfation Activity in the Atmosphere by the Lead Dioxide Technique, **11.03**
D 2011 Discontinued 1982; Method for Continous Analysis and Automatic Recording of the Oxidant Content of the Atmosphere
D 2012 Discontinued 1979; Method for Continous Measurement of Nitric Oxide, Nitrogen Dioxide, and Ozone in the Atmosphere
D 2013–86(1994) Method of Preparing Coal Samples for Analysis, **05.05**
D 2014–97 Test Method for Expansion or Contraction of Coal by the Sole-Heated Oven, **05.05**
D 2015–96 Test Method for Gross Calorific Value of Coal and Coke by the Adiabatic Bomb Calorimeter, **05.05**
D 2016 Discontinued 1989; Methods of Test for Moisture Content of Wood; Replaced by D 4442, D 4444
D 2017–81(1994)$^{\epsilon 1}$ Test Method for Accelerated Laboratory Test of Natural Decay Resistance of Woods, **04.10**
D 2018 Discontinued 1969; Recommended Practice for Determining Design Stresses for Load-Sharing Lumber Members
D 2019–93 Test Method for Dirt in Paper and Paperboard, **15.09**
D 2020–92(1995)$^{\epsilon 1}$ Test Methods for Mildew (Fungus) Resistance of Paper and Paperboard, **15.09**
D 2021–65(1995) Specification for Neutral Detergent, 40 Percent Alkylbenzene Sulfonate Type, **15.04**
D 2022–89(1995)$^{\epsilon 1}$ Test Methods of Sampling and Chemical Analysis of Chlorine-Containing Bleaches, **15.04**
D 2023–89(1995)$^{\epsilon 1}$ Test Method of Analysis for Sodium Toluene Sulfonate in Detergents, **15.04**
D 2024–65(1992) Test Method for Cloud Point of Nonionic Surfactants, **15.04**
D 2025 Redesignated F 37
D 2026–72(1993) Specification for Cutback Asphalt (Slow-Curing Type), **04.03**
D 2027–76(1992) Specification for Cutback Asphalt (Medium-Curing Type), **04.03**
D 2028–76(1992) Specification for Cutback Asphalt (Rapid-Curing Type), **04.03**
D 2029–97 Test Methods for Water Vapor Content of Electrical Insulating Gases by Measurement of Dew-Point, **10.03**
D 2030–93 Test Method for Water Solubility of Refined Pyridine, **06.04**
D 2031–93 Test Method for Reducing Substances in Refined Pyridine, **06.04**
D 2032 Discontinued 1987; Specification for Deuterium Oxide
D 2033 Discontinued 1987; Method of Test for Consumption of Potassium

D 3113–92 Test Methods for Sodium Salts of EDTA in Water, **11.02**
D 3114 Discontinued 1986; Method of Test for D-C Electrical Conductivity of Hydrocarbon Fuels; Replaced by D 4308
D 3115–95 Test Method for Explosive Reactivity of Lubricants with Aerospace Alloys Under High Shear, **05.02**
D 3116 Discontinued 1994; Test Method for Trace Amounts of Lead in Gasoline
D 3117–96 Test Method for Wax Appearance Point of Distillate Fuels, **05.02**
D 3118 Not yet assigned
D 3119 Discontinued 1990; Test Method for Mist Spray Flammability of Hydraulic Fluids
D 3120–96 Test Method for Trace Quantities of Sulfur in Light Liquid Petroleum Hydrocarbons by Oxidative Microcoulometry, **05.02**
D 3121–94 Test Method for Tack of Pressure-Sensitive Adhesives by Rolling Ball, **15.06**
D 3122–95 Specification for Solvent Cements for Styrene-Rubber Plastic Pipe and Fittings, **08.04**
D 3123–94 Test Method for Spiral Flow of Low-Pressure Thermosetting Molding Compounds, **08.02**
D 3124–93 Test Method for Vinylidene Unsaturation in Polyethylene by Infrared Spectrophotometry, **08.02**
D 3125–93 Test Method for Monomethyl Ether of Hydroquinone in Colorless Monomeric Acrylic Esters and Acrylic Acid, **06.03**
D 3126 Discontinued 1987; Specification for n-Butyl Acetate (98 Percent Grade); Replaced by D 4615
D 3127 Discontinued 1987; Specification for Ethyl Acetate (99 Percent Grade); Replaced by D 4614
D 3128–93 Specification for 2-Methoxyethanol, **06.04**
D 3129–92 Guide for Testing Exterior Latex House Paints, **06.02**
D 3130–95 Specification for n–Propyl Acetate (96 % Grade), **06.04**
D 3131–93 Specification for Isopropyl Acetate (99 % Grade), **06.04**
D 3132–84(1990)$^{\epsilon 1}$ Test Method for Solubility Range of Resins and Polymers, **06.03**
D 3133–96 Test Method for Quantitative Determination of Cellulose Nitrate in Alkyd Lacquers by Infrared Spectrophotometry, **06.02**
D 3134–89 Practice for Establishing Color and Gloss Tolerances, **06.01**
D 3135–87(1994) Specification for Performance of Bonded, Fused, and Laminated Apparel Fabrics, **07.01**
D 3136–96 Terminology Relating to Care Labels for Textile and Leather Products Other Than Textile Floor Coverings and Upholstery, **07.01**
D 3137–81(1994) Test Method for Rubber Property—Hydrolytic Stability, **09.01**
D 3138–95 Specification for Solvent Cements for Transition Joints Between Acrylonitrile-Butadiene-Styrene (ABS) and Poly(Vinyl Chloride) (PVC) Non-Pressure Piping Components, **08.04**
D 3139–96 Specification for Joints for Plastic Pressure Pipes Using Flexible Elastomeric Seals, **08.04**
D 3140–90 Practice for Flaring Polyolefin Pipe and Tubing, **08.04**
D 3141–96 Specification for Asphalt for Undersealing Portland-Cement Concrete Pavements, **04.03**
D 3142–84(1989) Test Method for Specific Gravity or API Gravity of Liquid Asphalts by Hydrometer Method, **04.03**
D 3143–95 Test Method for Flash Point of Cutback Asphalt with Tag Open-Cup Apparatus, **04.03**
D 3144–95 Specification for Crosslinked Poly(Vinylidene Fluoride) Heat-Shrinkable Tubing for Electrial Insulation, **10.02**
D 3145–93 Test Method for Thermal Endurance of Electrical Insulating Varnishes by the Helical Coil Method, **10.02**
D 3146 Discontinued 1978; Specification for Oxidation-Inhibited Nineral Insulating Oil; Replaced by D 3487
D 3147–94 Test Method for Testing Stop-Leak Additives for Engine Coolants, **15.05**
D 3148–95 Test Method for Elastic Moduli of Intact Rock Core Specimens in Uniaxial Compression, **04.08**
D 3149–95 Specification for Crosslinked Polyolefin Heat-Shrinkable Tubing for Electrical Insulation, **10.02**
D 3150–95 Specification for Crosslinked and Noncrosslinked Poly(Vinyl Chloride) Heat-Shrinkable Tubing for Electrical Insulation, **10.02**
D 3151–88(1993)$^{\epsilon 1}$ Test Method for Thermal Failure of Solid Electrical Insulating Materials Under Electric Stress, **10.02**
D 3152–72(1994) Test Method for Capillary-Moisture Relationships for Fine-Textured Soils by Pressure-Membrane Apparatus, **04.08**
D 3153–87(1995) Test Method for Recoatability of Water-Emulsion Floor Polishes, **15.04**
D 3154–91 Test Method for Average Velocity in a Duct (Pitot Tube Method), **11.03**
D 3155–83 Test Method for Lime Content of Uncured Soil-Lime Mixtures, **04.08**
D 3156–96 Practice for Rubber—Chromatographic Analysis of Antidegradants (Stabilizers, Antioxidants, and Antiozonants), **09.01**
D 3157–84(1995)$^{\epsilon 1}$ Test Method for Rubber from Natural Sources—Color, **09.01**
D 3158 Discontinued 1984; Specification for Asphalt Saturated and Coated Organic Felt Used in Roofing
D 3159–95a Specification for Modified ETFE-Fluoropolymer Molding and Extrusion Materials, **08.02**
D 3160–96a Test Method for Phenol Content of Cumene (Isopropylbenzene) or AMS (alpha-Methylstyrene), **06.04**
D 3161–95a Test Method for Wind-Resistance of Asphalt Shingles (Fan-Induced Method), **04.04**
D 3162–94 Test Method for Carbon Monoxide in the Atmosphere (Continuous Measurement by Nondispersive Infrared Spectrometry), **11.03**
D 3163–96 Test Method for Determining Strength of Adhesively Bonded Rigid Plastic Lap-Shear Joints in Shear by Tension Loading, **15.06**
D 3164–92a Test Method for Strength Properties of Adhesively Bonded Plastic Lap-Shear Sandwich Joints in Shear by Tension Loading, **15.06**
D 3165–95 Test Method for Strength Properties of Adhesives in Shear by Tension Loading of Single-Lap-Joint Laminated Assemblies, **15.06**
D 3166–93 Test Method for Fatigue Properties of Adhesives in Shear by Tension Loading (Metal/Metal), **15.06**
D 3167–93 Test Method for Floating Roller Peel Resistance of Adhesives, **15.06**
D 3168–85(1994) Practice for Qualitative Identification of Polymers in Emulsion Paints, **06.01**
D 3169–89(1995) Specification for Refined Sunflower Oil, **06.03**
D 3170–87(1991)$^{\epsilon 1}$ Test Method for Chipping Resistance of Coatings, **06.02**
D 3171–76(1990)$^{\epsilon 1}$ Test Method for Fiber Content of Resin-Matrix Composites by Matrix Digestion, **15.03**
D 3172–89(1993) Practice for Proximate Analysis of Coal and Coke, **05.05**
D 3173–87(1996) Test Method for Moisture in the Analysis Sample of Coal and Coke, **05.05**
D 3174–93 Test Method for Ash in the Analysis Sample of Coal and Coke from Coal, **05.05**
D 3175–89a(1993) Test Method for Volatile Matter in the Analysis Sample of Coal and Coke, **05.05**
D 3176–89(1993) Practice for Ultimate Analysis of Coal and Coke, **05.05**
D 3177–89(1993) Test Method for Total Sulfur in the Analysis Sample of Coal and Coke, **05.05**
D 3178–89(1993) Test Method for Carbon and Hydrogen in the Analysis Sample of Coal and Coke, **05.05**
D 3179–89(1993) Test Method for Nitrogen in the Analysis Sample of Coal and Coke, **05.05**
D 3180–89(1993) Practice for Calculating Coal and Coke Analyses from As-Determined to Different Bases, **05.05**
D 3181–95 Practice for Conducting Wear Tests on Textiles, **07.01**
D 3182–89(1994) Practice for Rubber—Materials, Equipment, and Procedures for Mixing Standard Compounds and Preparing Standard Vulcanized Sheets, **09.01**
D 3183–84(1992) Practice for Rubber—Preparation of Pieces for Test Purposes from Products, **09.01**
D 3184–89(1995)$^{\epsilon 1}$ Test Methods for Rubber—Evaluation of NR (Natural Rubber), **09.01**
D 3185–88(1994) Test Methods for Rubber—Evaluation of SBR (Styrene-Butadiene Rubber) Including Mixtures with Oil, **09.01**
D 3186–95 Test Methods for Rubber—Evaluation of SBR (Styrene-Butadiene Rubber) Mixed with Carbon Black or Carbon Black and Oil, **09.01**
D 3187–95 Test Methods for Rubber—Evaluation of NBR (Acrylonitrile-Butadiene Rubber), **09.01**
D 3188–95 Test Methods for Rubber—Evaluation of IIR (Isobutene-Isoprene Rubber), **09.01**
D 3189–94 Test Methods for Rubber— Evaluation of Solution BR (Polybutadiene Rubber), **09.01**
D 3190–91 Test Methods for Rubber—Evaluation of General-Purpose CR (Chloroprene Rubber), **09.01**
D 3191–96a Test Methods for Carbon Black in SBR (Styrene-Butadiene Rubber)—Recipe and Evaluation Procedures, **09.01**
D 3192–96a Test Methods for Carbon Black Evaluation in NR (Natural Rubber), **09.01**
D 3193–96 Specification for Ethylbenzene, **06.04**
D 3194–94 Test Method for Rubber from Natural Sources—Plasticity Retention Index (PRI), **09.01**
D 3195–90(1994)$^{\epsilon 1}$ Practice for Rotameter Calibration, **11.03**
D 3196 Discontinued 1985; Method of Test for Rubber Properties in Tension Solid Urethanes; Replaced by D 412
D 3197 Discontinued 1986; Specification for Insert-Type Polyethylene Fusion Fittings for SDR 11.0 Polyethylene Pipe
D 3198–91 Test Method for Application and Removal Torque of Threaded or Lug-Style Closures, **15.09**
D 3199–84(1994)$^{\epsilon 1}$ Test Method for Water Vapor Transmission Through Screw-Cap Closure Liners, **15.09**
D 3200–74(1994)$^{\epsilon 1}$ Specification and Test Method for Establishing Recommended Design Stresses for Round Timber Construction Poles, **04.10**
D 3201–94 Test Method for Hygroscopic Properties of Fire-Retardant Wood and Wood-Base Products, **04.10**
D 3202–94 Practice for Preparation of Bituminous Mixture Beam Specimens by Means of the California Kneading Compactor, **04.03**
D 3203–94 Test Method for Percent Air Voids in Compacted Dense and Open Bituminous Paving Mixtures, **04.03**
D 3204–93 Specification for Preformed Cellular Plastic Joint Fillers for Relieving Pressure, **04.03**
D 3205–86(1991) Test Method for Viscosity of Asphalt with Cone and Plate Viscometer, **04.03**
D 3206–92(1996) Test Method for Soil Resistance of Floor Polishes, **15.04**
D 3207–92(1996) Test Method for Detergent Resistance of Floor Polish Films, **15.04**
D 3208–94 Specification for Manifold Papers for Permanent Records, **15.09**
D 3209–93 Test Method for Freeze/Thaw Resistance of Polymer Emulsion Floor Polishes, **15.04**

D 3210–95 Test Method for Comparing Colors of Films from Water-Emulsion Floor Polishes, **15.04**
D 3211 Discontinued 1991; Test Method for Relative Density of Black Smoke (Ringelmann Method)
D 3212–96 Specification for Joints for Drain and Sewer Plastic Pipes Using Flexible Elastomeric Seals, **08.04**
D 3213–91 Practices for Handling, Storing, and Preparing Soft Undisturbed Marine Soil, **04.08**
D 3214–96 Test Methods for Coating Powders and Their Coatings Used for Electrical Insulation, **10.02**
D 3215–93 Test Method for Measurement of the Specific Electrical Impedance of Electrical-Grade Magnesium Oxide for Use in Sheathed-Type Heating Elements, **10.02**
D 3216 Discontinued 1985; Method of Test for Grading Cotton Card Webs for Appearance
D 3217–95 Test Methods for Breaking Tenacity of Man-Made Textile Fibers in Loop or Knot Configurations, **07.01**
D 3218–93 Specification for Polyolefin Monofilaments, **07.01**
D 3219 Discontinued 1992; Specification for Industrial Filament Yarns, Tire Cords, and Tire Cord Fabrics Made from Man-Made Organic-Base Fibers
D 3220 Discontinued 1989; Specification for Reinforced Polyterephthalate Thermoplastic Molding and Extrusion Materials; Replaced by D 4507
D 3221 Discontinued 1989; Specification for Thermoplastic Polyterephthalate Molding and Extrusion Materials; Replaced by D 4507
D 3222–91a Specification for Unmodified Poly(Vinylidene Fluoride)(PVDF) Molding Extrusion and Coating Materials, **08.02**
D 3223–95 Test Method for Total Mercury in Water, **11.01**
D 3224–95 Test Method for Water Solubility of Auxiliary Solvent for Wood Preserving Solutions, **04.10**
D 3225–73(1995)$^{\epsilon 1}$ Specification for Low-Boiling Hydrocarbon Solvent for Oil-Borne Preservatives, **04.10**
D 3226 Discontinued 1979; Method of Test for Sulfur Oxides in Flue Gases (Barium Chloranilate Controlled Condensation ,ethod)
D 3227–96 Test Method for Mercaptan Sulfur in Gasoline, Kerosine, Aviation Turbine, and Distillate Fuels (Potentiometric Method), **05.02**
D 3228–96 Test Method for Total Nitrogen in Lubricating Oils and Fuel Oils by Modified Kjeldahl Method, **05.02**
D 3229 Discontinued 1993; Method of Test for Low Levels of Lead in Gasoline by X-ray Spectrometry; Replaced by D 5059
D 3230–89 Test Method for Salts in Crude Oil (Electrometric Method), **05.02**
D 3231–94 Test Method for Phosphorus in Gasoline, **05.02**
D 3232 Discontinued 1994; Test Method for Measurement of Consistency of Lubricating Greases at High Temperatures
D 3233–93 Test Methods for Measurement of Extreme Pressure Properties of Fluid Lubricants (Falex Pin and Vee Block Methods), **05.02**
D 3234–88(1993)$^{\epsilon 1}$ Test Method for Abrasion Resistance of Petroleum Wax Coatings, **05.02**
D 3235–93 Test Method for Solvent Extractables in Petroleum Waxes, **05.02**
D 3236–88(1993)$^{\epsilon 1}$ Test Method for Apparent Viscosity of Hot Melt Adhesives and Coating Materials, **05.02**
D 3237–96 Test Method for Lead in Gasoline by Atomic Absorption Spectrometry, **05.02**
D 3238–95 Test Method for Calculation of Carbon Distribution and Structural Group Analysis of Petroleum Oils by the n-d-M Method, **05.02**
D 3239–91(1996) Test Method for Aromatic Types Analysis of Gas-Oil Aromatic Fractions by High Ionizing Voltage Mass Spectrometry, **05.02**
D 3240–91(1996) Test Method for Undissolved Water in Aviation Turbine Fuels, **05.02**
D 3241–96a Test Method for Thermal Oxidation Stability of Aviation Turbine Fuels (JFTOT Procedure), **05.02**
D 3242–89(1993)$^{\epsilon 1}$ Test Method for Acidity in Aviation Turbine Fuel, **05.02**
D 3243 Discontinued 1983; Method of Test for Flash-Point of Aviation Turbine Fuels by Setaflash Closed Tester; Replaced by D 3828
D 3244–96 Practice for Utilization of Test Data to Determine Conformance with Specifications, **05.02**
D 3245–96 Test Method for Pumpability of Industrial Fuel Oils, **05.02**
D 3246–96 Test Method for Sulfur in Petroleum Gas by Oxidative Microcoulometry, **05.02**
D 3247 Discontinued 1988; Test Method for Coefficient of Static Friction of Corrugated and Solid Fiberboard (Horizontal Plane Method); Replaced by D 4521
D 3248 Discontinued 1988; Test Method for Coefficient of Static Friction of Corrugated and Solid Fiberboard (Inclined Plane Method); Replaced by D 4521
D 3249–95 Practice for General Ambient Air Analyzer Procedures, **11.03**
D 3250 Discontinued 1991; Test Method for Total Oxygen Demand in Water
D 3251–95 Test Method for Thermal-Aging Characteristics of Electrical Insulating Varnishes Applied Over Film-Insulated Magnet Wire, **10.02**
D 3252 Discontinued 1986; Method of Test for Undersized Loose Muscovite Mica Splittings
D 3253 Discontinued 1991; Specification for Vulcanized Rubber Sheeting for Pond
D 3254 Discontinued 1991; Specification for Fabric—Reinforced, Vulcanized Rubber Sheeting for Pond, Canal, and Reservoir Lining
D 3255 Discontinued 1981; Method for Investigating the Compatibility of Transformer Insulation and Construction Materials in Askarels
D 3256–86(1991)$^{\epsilon 1}$ Test Methods for Chemical Analysis of Phthalocyanine Blue and Green Pigments, **06.03**
D 3257–93 Test Method for Aromatics in Mineral Spirits by Gas Chromatography, **06.04**
D 3258–80(1992)$^{\epsilon 1}$ Test Method for Porosity of Paint Films, **06.02**
D 3259–95 Practice for Infrared Determination of the Temperature of Applied Coatings on Wood Products During the Curing Cycle, **06.02**
D 3260–82(1996)$^{\epsilon 1}$ Test Method for Acid and Mortar Resistance of Factory-Applied Clear Coatings on Extruded Aluminum Products, **06.02**
D 3261–95 Specification for Butt Heat Fusion Polyethylene (PE) Plastic Fittings for Polyethylene (PE) Plastic Pipe and Tubing, **08.04**
D 3262–96 Specification for "Fiberglass" (Glass-Fiber-Reinforced Thermosetting-Resin) Sewer Pipe, **08.04**
D 3263–82(1994) Test Methods for Corrosivity of Solvent Systems for Removing Water-Formed Deposits, **11.02**
D 3264–92 Specification for Industrial Grade Aniline, **06.04**
D 3265–96 Test Method for Carbon Black—Tint Strength, **09.01**
D 3266–91(1995)$^{\epsilon 1}$ Test Method for Automated Separation and Collection of Particulate and Acidic Gaseous Fluoride in the Atmosphere (Double Paper Tape Sampler Method), **11.03**
D 3267–91(1995)$^{\epsilon 1}$ Test Method for Separation and Collection of Particulate and Water-Soluble Gaseous Fluorides in the Atmosphere (Filter and Impinger Method), **11.03**
D 3268–91 Test Method for Separation and Collection of Particulate and Gaseous Fluorides in the Atmosphere (Sodium Bicarbonate-Coated Glass Tube and Particulate Filter Method), **11.03**
D 3269–96 Test Methods for Analysis for Fluoride Content of the Atmosphere and Plant Tissues (Manual Procedures), **11.03**
D 3270–91(1995)$^{\epsilon 1}$ Test Methods for Analysis for Fluoride Content of the Atmosphere and Plant Tissues (Semiautomated Method), **11.03**
D 3271–87(1993)$^{\epsilon 1}$ Practice for Direct Injection of Solvent-Reducible Paints into a Gas Chromatograph for Solvent Analysis, **06.01**
D 3272–76(1993)$^{\epsilon 1}$ Practice for Vacuum Distillation of Solvents from Solvent-Reducible Paints for Analysis, **06.01**
D 3273–94 Test Method for Resistance to Growth of Mold on the Surface of Interior Coatings in an Environmental Chamber, **06.01**
D 3274–95 Test Method for Evaluating Degree of Surface Disfigurement of Paint Films by Microbial (Fungal or Algal) Growth or Soil and Dirt Accumulation, **06.01**
D 3275–91a Specification for E-CTFE-Fluoroplastic Molding, Extrusion, and Coating Materials, **08.02**
D 3276–96 Guide for Painting Inspectors (Metal Substrates), **06.02**
D 3277–95 Test Method for Moisture Content of Oil-Impregnated Cellulosic Insulation, **10.03**
D 3278–96 Test Methods for Flash Point of Liquids by Setaflash Closed-Cup Apparatus, **06.01**
D 3279–90 Test Method for n-Heptane Insolubles, **04.03**
D 3280–85(1994) Test Methods for Analysis of White Zinc Pigments, **06.03**
D 3281 Discontinued 1995; Test Method for Formability of Attached Organic Coatings with Impact-Wedge Bend Apparatus
D 3282–93 Classification of Soils and Soil-Aggregate Mixtures for Highway Construction Purposes, **04.08**
D 3283–73(1993) Specification for Air as an Electrical Insulating Material, **10.03**
D 3284–90a(1994) Test Method for Combustible Gases in the Gas Space of Electrical Apparatus in the Field, **10.03**
D 3285–93 Test Method for Water Absorptiveness of Nonbibulous Paper and Paperboard (Cobb Test), **15.09**
D 3286–96 Test Method for Gross Calorific Value of Coal and Coke by the Isoperibol Bomb Calorimeter, **05.05**
D 3287 Discontinued 1991; Specification for Biaxially Oriented Polyethyiene (PEO) Plastic Pipe (SDR-PR) Based on Controlled Outside Diameter
D 3288–95 Test Methods for Magnet-Wire Enamels, **10.02**
D 3289–90 Test Method for Specific Gravity or Density of Semi-Solid and Solid Bituminous Materials by Nickel Crucible, **04.03**
D 3290–94 Specification for Bond and Ledger Papers for Permanent Records, **15.09**
D 3291–92 Practice for Compatibility of Plasticizers in Poly(Vinyl Chloride) Plastics Under Compression, **08.02**
D 3292 Discontinued 1982; Recommended Practice for Powder Flow Measurement of TFE-Fluorocarbon Molding and Extrusion Materials
D 3293–91a(1996) Specification for PTFE Resin Molded Sheet, **08.02**
D 3294–91a Specification for PTFE Resin Molded Sheet and Molded Basic Shapes, **08.02**
D 3295–96 Specification for PTFE Tubing, **08.02**
D 3296–93 Specification for FEP-Fluorocarbon Tube, **08.02**
D 3297–93 Practice for Molding and Machining Tolerances for PTFE Resin Parts, **08.02**
D 3298 Discontinued 1989; Specification for Perforated Styrene-Rubber (SR) Plastic Drain Pipe
D 3299–95 Specification for Filament-Wound Glass-Fiber-Reinforced Thermoset Resin Corrosion-Resistant Tanks, **08.04**
D 3300–94 Test Method for Dielectric Breakdown Voltage of Insulating Oils of Petroleum Origin Under Impulse Conditions, **10.03**
D 3301–94 Specification for File Folders for Storage of Permanent Records, **15.09**
D 3302–97 Test Method for Total Moisture in Coal, **05.05**
D 3303 Discontinued 1984; Method for Rapid Gas Chromatographic Estimation of Higher Boiling Homologues of Chlorinated Biphenyls for Capacitor Askarels
D 3304 Discontinued 1993; Method for Analysis of Environmental Materials for Polychlorinated Biphenyls
D 3305–94 Practice for Sampling a Small Gas Volume in a Transformer, **10.03**

D 3306–94 Specification for Ethylene Glycol Base Engine Coolant for Automobile and Light Duty Service, **15.05**
D 3307–93 Specification for PFA-Fluorocarbon Molding and Extrusion Materials, **08.02**
D 3308–91a Specification for PTFE Resin Skived Tape, **08.02**
D 3309–96 Specification for Polybutylene (PB) Plastic Hot and Cold-Water Distribution Systems, **08.04**
D 3310–90(1995) Test Method for Determining Corrosivity of Adhesive Materials, **15.06**
D 3311–94 Specification for Drain, Waste, and Vent (DWV) Plastic Fittings Patterns, **08.04**
D 3312–96 Test Method for Percent Reactive Monomer in Solventless Varnishes, **10.02**
D 3313–95 Test Method for Carbon Black—Individual Pellet Crush Strength, **09.01**
D 3314–92 Test Method for Rubber—Chemical Analysis for Polystyrene Blocks in SBR (Styrene-Butadiene Rubber) and Styrene-Reinforced Latices, **09.01**
D 3315 Discontinued 1989; Test Method for Radioactive Zirconium in Water
D 3316–96 Test Method for Stability of Perchloroethylene with Copper, **15.05**
D 3317 Discontinued 1986; Specification for High Modulus, Organic Yarn and Roving
D 3318 Discontinued 1984; Specification for Woven Cloth from High Modulus Organic Fiber
D 3319–90 Test Method for Accelerated Polishing of Aggregates Using the British Wheel, **04.03**
D 3320–90 Specification for Emulsified Coal-Tar Pitch (Mineral Colloid Type), **04.04**
D 3321–94 Test Method for Use of the Refractometer for Field Test Determination of the Freezing Point of Aqueous Engine Coolants, **15.05**
D 3322–82(1996)$^{\epsilon 1}$ Practice for Testing Primers and Primer Surfacers over Preformed Metal, **06.02**
D 3323 Discontinued 1993; Guide for Testing Interior Solvent-Thinned Flat Wall Paints; Replaced by D 5146
D 3324–95a Practice for Carbon Black—Improving Test Reproducibility Using ASTM Reference Blacks, **09.01**
D 3325–90(1996)$^{\epsilon 1}$ Practice for Preservation of Waterborne Oil Samples, **11.02**
D 3326–90(1996)$^{\epsilon 1}$ Practice for Preparation of Samples for Identification of Waterborne Oils, **11.02**
D 3327 Discontinued 1994; Test Methods for Analysis of Selected Elements in Waterborne Oils
D 3328–90 Test Methods for Comparison of Waterborne Petroleum Oils by Gas Chromatography, **11.02**
D 3329–94a Test Method for Purity of Methyl Isobutyl Ketone by Gas Chromatography, **06.04**
D 3330–96 Test Methods for Peel Adhesion of Pressure-Sensitive Tape at 180° Angle, **15.09**
D 3330M–96 Test Methods for Peel Adhesion of Pressure-Sensitive Tape at 180° Angle [Metric], **15.09**
D 3331 Discontinued 1985; Method of Test for Assessment of Mechanical-Shock Fragility Using Package Cushioning Materials
D 3332–93 Test Method for Mechanical-Shock Fragility of Products, Using Shock Machines, **15.09**
D 3333–95 Practice for Sampling Man-Made Staple Fibers, Sliver, or Tow for Testing, **07.02**
D 3334 Discontinued 1990; Method of Testing Fabrics Woven From Polyolefin Monofilaments
D 3335–85a(1994) Test Method for Low Concentrations of Lead, Cadmium, and Cobalt in Paint by Atomic Absorption Spectroscopy, **06.01**
D 3336–91 Test Method for Life of Lubricating Greases in Ball Bearings at Elevated Temperatures, **05.02**
D 3337–91(1996) Test Method for Determining Life and Torque of Lubricating Greases in Small Ball Bearings, **05.02**
D 3338–95 Test Method for Estimation of Heat of Combustion of Aviation Fuels, **05.02**
D 3339–95$^{\epsilon 1}$ Test Method for Acid Number of Petroleum Products by Semi-Micro Color Indicator Titration, **05.02**
D 3340–90(1995)$^{\epsilon 1}$ Test Method for Lithium and Sodium in Lubricating Greases by Flame Photometer, **05.02**
D 3341–91(1995) Test Method for Lead in Gasoline—Iodine Monochloride Method, **05.02**
D 3342–90(1995)$^{\epsilon 1}$ Test Method for Dispersion Stability for New (Unused) Rolling Oil Dispersions in Water, **05.02**
D 3343–95 Test Method for Estimation of Hydrogen Content of Aviation Fuels, **05.02**
D 3344–90(1995) Test Method for Total Wax Content of Corrugated Paperboard, **05.02**
D 3345–74(1992) Test Method for Laboratory Evaluation of Wood and Other Cellulosic Materials for Resistance to Termites, **04.10**
D 3346–90(1995)$^{\epsilon 1}$ Test Methods for Rubber Property—Processability of SBR (Styrene-Butadiene Rubber) With the Mooney Viscometer, **09.01**
D 3347–94 Test Method for Flow Rate and Tap Density of Electrical Grade Magnesium Oxide for Use in Sheathed-Type Electric Heating Elements, **10.02**
D 3348–92 Test Method for Rapid Field Test for Trace Lead in Unleaded Gasoline (Colorimetric Method), **05.02**
D 3349–93 Test Method for Absorption Coefficient of Ethylene Polymer Material Pigmented with Carbon Black, **10.02**
D 3350–96 Specification for Polyethylene Plastics Pipe and Fittings Materials, **08.02**
D 3351–93 Test Method for Gel Count of Plastic Film, **08.02**
D 3352–94 Test Method for Strontium Ion in Brackish Water, Seawater, and Brines, **11.02**
D 3353–92(1995)$^{\epsilon 1}$ Test Methods for Fibrous-Insulated Magnet Wire, **10.02**
D 3354–96 Test Method for Blocking Load of Plastic Film by the Parallel Plate Method, **08.02**
D 3355 Discontinued 1988; Method of Test for Fiber Content of Unidirectional Fiber-Resin Composites by Electrical Resistivity
D 3356 Discontinued 1992; Specification for Fittings for Bituminized Fiber Drain and Sewer Pipe
D 3357 Discontinued 1991; Test Method for Radioactive Nickel in Water
D 3358 Discontinued 1994; Guide for Testing Water-Borne Floor Paints; Replaced by D 5324
D 3359–95a Test Methods for Measuring Adhesion by Tape Test, **06.01**
D 3360–96 Test Method for Particle Size Distribution by Hydrometer of the Common White Extender Pigments, **06.03**
D 3361–93 Practice for Operating Light- and Water-Exposure Apparatus (Unfiltered Carbon-Arc Type) for Testing Paint, Varnish, Lacquer, and Related Products Using the Dew Cycle, **06.01**
D 3362–93 Test Method for Purity of Acrylate Esters by Gas Chromatography, **06.04**
D 3363–92a Test Method for Film Hardness by Pencil Test, **06.01**
D 3364–94 Test Method for Flow Rates for Poly(Vinyl Chloride) and Rheologically Unstable Thermoplastics, **08.02**
D 3365 Discontinued 1987; Method of Test for Concentration and Particle Size Distribution of Airborne Particulates Collected in Liquid Media Using an Electronic Counter
D 3366–95 Test Method for Color of Maleic Anhydride and Phthalic Anhydride in the Molten State and After Heating (Platinum-Cobalt Scale), **06.04**
D 3367–95 Test Method for Plasticizer Sorption of Poly(Vinyl Chloride) Resins Under Applied Centrifugal Force, **08.02**
D 3368–94 Specification for FEP-Fluorocarbon Resin Sheet and Film, **08.02**
D 3369–96 Specification for Polytetrafluoroethane (PTFE) Resin Cast Film, **08.02**
D 3370–95a Practices for Sampling Water from Closed Conduits, **11.01**
D 3371–95 Test Method for Nitriles in Aqueous Solution by Gas-Liquid Chromatography, **11.02**
D 3372–92(1996) Test Method for Molybdenum in Water, **11.01**
D 3373–93 Test Method for Vanadium in Water, **11.01**
D 3374–94 Specification for Vinyl-Coated Glass Yarns, **07.02**
D 3375–95a Test Method for Column Capacity of Particulate Mixed Bed Ion Exchange Materials, **11.02**
D 3376–88(1994)$^{\epsilon 1}$ Test Methods of Sampling and Testing Pulps to Be Used in the Manufacture of Electrical Insulation, **10.02**
D 3377–96 Test Method for Weight Loss of Solventless Varnishes, **10.02**
D 3378 Discontinued 1985; Specification for Asphalt-Saturated and Coated Asbestos Felt Base Sheet Used in Roofing
D 3379–75(1989)$^{\epsilon 1}$ Test Method for Tensile Strength and Young's Modulus for High-Modulus Single-Filament Materials, **15.03**
D 3380–90(1995)$^{\epsilon 1}$ Test Method for Relative Permittivity (Dielectric Constant) and Dissipation Factor of Polymer-Based Microwave Circuit Substrates, **10.02**
D 3381–92 Specification for Viscosity-Graded Asphalt Cement for Use in Pavement Construction, **04.03**
D 3382/D3382M–95 Test Methods for Measurement of Energy and Integrated Charge Transfer Due to Partial Discharges (Corona) Using Bridge Techniques, **10.02**
D 3383 Discontinued 1993; Guide for Testing Solvent-Thinned Floor Paints; Replaced by D 5146
D 3384 Discontinued 1977; Method of Test for Powder Resistance of Floor Polish Films; Replaced by D 2048
D 3385–94 Test Method for Infiltration Rate of Soils in Field Using Double-Ring Infiltrometer, **04.08**
D 3386–94 Test Method for Coefficient of Linear Thermal Expansion of Electrical Insulating Materials, **10.02**
D 3387–83(1996) Test Method for Compaction and Shear Properties of Bituminous Mixtures by Means of the U.S. Corps of Engineers Gyratory Testing Machine (GTM), **04.03**
D 3388 Discontinued 1984; Method of Testing Coated Fabrics—Stiffening at Low Temperatures (Torsional Wire Apparatus); Combined with D 1053
D 3389–94 Test Method for Coated Fabrics Abrasion Resistance (Rotary Platform, Double-Head Abrader), **09.02**
D 3390 Discontinued 1986; Specification for Rubber Semiconducting Tape
D 3391 Discontinued 1986; Specification for High Voltage Rubber Insulating Tape
D 3392 Discontinued 1984; Recommended Practice for Carbon Black Extractables—Light-Absorption Characteristics
D 3393–91 Specification for Coated Fabrics—Waterproofness, **09.02**
D 3394–94 Test Methods for Sampling and Testing Electrical Insulating Board, **10.02**
D 3395–86(1991) Test Methods for Rubber Deterioration—Dynamic Ozone Cracking in a Chamber, **09.01**
D 3396 Discontinued 1990; Recommended Practice for Carbon Black—Measuring the Precision of ASTM Test Methods; Replaced by D 4483
D 3397 Discontinued 1989; Method for Triaxial Classification of Base Materials
D 3398–93 Test Method for Index of Aggregate Particle Shape and Texture, **04.03**

D 4158–92 Test Method for Abrasion Resistance of Textile Fabrics (Uniform Abrasion Method), **07.02**
D 4159 Discontinued 1992; Test Method for Resistance to Yarn Slippage in Woven Upholstery Fabrics—Plain, Tufted, or Flocked (Using a Simulated Seam)
D 4160 Discontinued 1991; Specification for Reinforced Thermosetting Resin Pipe (RTRP) Fittings for Nonpressure Applications; Replaced by D 3840
D 4161–96 Specification for "Fiberglass" (Glass-Fiber-Reinforced Thermosetting-Resin) Pipe Joints Using Flexible Elastomeric Seals, **08.04**
D 4162 Discontinued 1987; Specification for Reinforced Thermosetting Resin Sewer and Industrial Pressure Pipe (RTRP)
D 4163 Discontinued 1987; Specification for Reinforced Thermosetting Resin Pressure Pipe (RTRP)
D 4164–88(1994)$^{\epsilon 1}$ Test Method for Mechanically Tapped Apparent Packing Density of Formed Catalyst and Catalyst Carriers, **05.03**
D 4165–95 Test Method for Cyanogen Chloride in Water, **11.02**
D 4166–94 Test Method for Measurement of Thickness of Non-Magnetic Materials by Means of a Digital Magnetic Intensity Instrument, **08.04**
D 4167–91 Specification for Fiber-Reinforced Plastic Fans and Blowers, **08.04**
D 4168–95 Test Methods for Transmitted Shock Characteristics of Foam-in-Place Cushioning Materials, **15.09**
D 4169–96 Practice for Performance Testing of Shipping Containers and Systems, **15.09**
D 4170–93 Test Method for Fretting Wear Protection by Lubricating Grease, **05.02**
D 4171–94 Specification for Fuel System Icing Inhibitors, **05.02**
D 4172–94 Test Method for Wear Preventive Characteristics of Lubricating Fluid (Four-Ball Method), **05.02**
D 4173 Discontinued 1991; Practice for Evaluating Sheet Metal Forming Lubricant
D 4174–89(1994) Practice for Cleaning, Flushing, and Purification of Petroleum Fluid Hydraulic Systems, **05.02**
D 4175–96 Terminology Relating to Petroleum, Petroleum Products, and Lubricants, **05.02**
D 4176–93 Test Method for Free Water and Particulate Contamination in Distillate Fuels (Visual Inspection Procedures), **05.02**
D 4177–95 Practice for Automatic Sampling of Petroleum and Petroleum Products, **05.02**
D 4178–82(1993) Practice for Calibrating Moisture Analyzers, **05.02**
D 4179–88(1994)$^{\epsilon 1}$ Test Method for Single Pellet Crush Strength of Formed Catalyst Shapes, **05.03**
D 4180–88(1994) Test Method for Vibratory Packing Density of Formed Catalyst Particles and Catalyst Carriers, **05.03**
D 4181–96 Specification for Acetal (POM) Molding and Extrusion Materials, **08.02**
D 4182–92 Practice for Evaluation of Laboratories Using ASTM Procedures in the Sampling and Analysis of Coal and Coke, **05.05**
D 4183 Discontinued 1994; Test Methods for Total Recoverable Phosphorus and Organic Phosphorus in Sediments
D 4184 Discontinued 1987; Specification for Reinforced Thermosetting Resin (RTRP) Sewer Pipe—Replaced by D 3262
D 4185–96 Practice for Measurement of Metals in Workplace Atmosphere by Flame Atomic Absorption Spectrophotometry, **11.03**
D 4186–89 Test Method for One-Dimensional Consolidation Properties of Soils Using Controlled-Strain Loading, **04.08**
D 4187 Discontinued 1992; Test Methods for Zeta Potential of Colloids in Water and Waste Water
D 4188–82(1994) Practice for Performing Pressure In-Line Coagulation-Flocculation-Filtration Test, **11.01**
D 4189–95 Test Method for Silt Density Index (SDI) of Water, **11.01**
D 4190–94a Test Method for Elements in Water by Direct-Current Argon Plasma Atomic Emission Spectroscopy, **11.01**
D 4191–93 Test Method for Sodium in Water by Atomic Absorption Spectrophotometry, **11.01**
D 4192–93 Test Method for Potassium in Water by Atomic Absorption Spectrophotometry, **11.01**
D 4193–95 Test Method for Thiocyanate in Water, **11.02**
D 4194–95 Test Methods for Operating Characteristics of Reverse Osmosis Devices, **11.02**
D 4195–88(1993) Guide for Water Analysis for Reverse Osmosis Application, **11.02**
D 4196–82(1993)$^{\epsilon 1}$ Test Method for Confirming the Sterility of Membrane Filters, **11.02**
D 4197 Discontinued 1994; Test Methods for Percent Porosity of Membrane Filters
D 4198–82(1993)$^{\epsilon 1}$ Methods for Evaluating Absorbent Pads Used with Membrane Filters for Bacteriological Analysis and Growth, **11.02**
D 4199–82(1993)$^{\epsilon 1}$ Test Methods for Autoclavability of Membrane Filters, **11.02**
D 4200–82(1993)$^{\epsilon 1}$ Test Method for Evaluating Inhibitory Effects of Ink Grids on Membrane Filters, **11.02**
D 4201–96 Test Method for Coliphages in Water, **11.02**
D 4202–82(1987)$^{\epsilon 1}$ Test Method for Thermal Stability of Poly(Vinyl Chloride) (PVC) Resin, **08.02**
D 4203–95 Specification for Styrene Acrylonitrile (SAN) Injection and Extrusion Materials, **08.02**
D 4204–95 Practice for Preparing Plastic Film Specimens for a Round-Robin Study, **08.02**
D 4205–93(1994)$^{\epsilon 1}$ Guide for Flammability and Combustion Testing of Rubber and Rubber-Like Materials, **08.02**
D 4206–96 Test Method for Sustained Burning of Liquid Mixtures by the Setaflash Tester (Open Cup), **06.01**
D 4207–91 Test Method for Sustained Burning of Low-Viscosity Mixtures by the Wick Test, **06.01**
D 4208–88(1993) Test Method for Total Chlorine in Coal by the Oxygen Bomb Combustion/Ion Selective Electrode Method, **05.05**
D 4209–82(1991)$^{\epsilon 1}$ Practice for Determining Volatile and Nonvolatile Content of Cellulosics, Emulsions, Resin Solutions, Shellac, and Varnishes, **06.01**
D 4210–89(1996)$^{\epsilon 1}$ Practice for Interlaboratory Quality Control Procedures and a Discussion on Reporting Low-Level Data, **11.01**
D 4211–82(1993) Classification for Fish Sampling, **11.05**
D 4212–93 Test Method for Viscosity by Dip-Type Viscosity Cups, **06.01**
D 4213–96$^{\epsilon 1}$ Test Method for Wet Abrasion Resistance of Interior Paints, **06.02**
D 4214–89 Test Methods for Evaluating Degree of Chalking of Exterior Paint Films, **06.01**
D 4215–96 Specification for Cold-Mixed, Cold-Laid Bituminous Paving Mixtures, **04.03**
D 4216–92 Specification for Rigid Poly(Vinyl Chloride) (PVC) and Related Plastic Building Products Compounds, **08.02**
D 4217–91(1995)$^{\epsilon 1}$ Test Method for Gel Time for Thermosetting Coating Powder, **10.02**
D 4218–96 Test Method for Carbon Black Content in Polyethylene Compounds by the Muffle-Furnace Technique, **08.02**
D 4219–93a Test Method for Unconfined Compressive Strength Index of Chemical-Grouted Soils, **04.08**
D 4220–95 Practices for Preserving and Transporting Soil Samples, **04.08**
D 4221–90 Test Method for Dispersive Characteristics of Clay Soil by Double Hydrometer, **04.08**
D 4222–91 Test Method for Determination of Nitrogen Adsorption and Desorption Isotherms of Catalysts by Static Volumetric Measurements, **05.03**
D 4223–96 Practice for Preparation of Test Specimens of Asphalt Stabilized Soils, **04.08**
D 4224 Discontinued 1995; Test Method for Anionic Detergent by Para-Toluidine Hydrochloride; Replaced by D 4251
D 4225–90 Specification for Styrene-Butadiene Sheeting, **08.02**
D 4226–95 Test Methods for Impact Resistance of Rigid Poly(Vinyl Chloride)(PVC) Building Products, **08.04**
D 4227–95 Practice for Qualification of Coating Applicators for Application of Coatings to Concrete Surfaces, **06.02**
D 4228–95 Practice for Qualification of Coating Applicators for Application of Coatings to Steel Surfaces, **06.02**
D 4229 Discontinued 1988; Method for Conducting Static Acute Toxicity Tests on Waste-Waters with Daphnia
D 4230–83(1996) Test Method of Measuring Humidity With Cooled-Surface Condensation (Dew-Point) Hygrometer, **11.03**
D 4231–83(1989)$^{\epsilon 1}$ Practice for Evaluation of Men's and Boys' Home Launderable Woven Dress Shirts and Sport Shirts, **07.02**
D 4232–95a Performance Specification for Men's and Women's Dress and Vocational Career Apparel Fabrics, **07.02**
D 4233–95 Performance Specification for Women's and Girls' Knitted and Woven Brassiere Fabrics, **07.01**
D 4234–95 Performance Specification for Women's and Girls' Knitted Robe, Negligee, Nightgown, Pajama, Slip, and Lingerie Fabrics, **07.02**
D 4235–95 Performance Specification for Women's and Girls' Knitted Blouse and Dress Fabrics, **07.02**
D 4236–94 Practice for Labeling Art Materials for Chronic Health Hazards, **06.02**
D 4237–90 Test Methods for Rubber Hose Used for Steam Applications, **09.02**
D 4238 Test Method for Discontinued 1996; Test Method for Electrostatic Propensity of Textiles
D 4239–94 Test Method for Sulfur in the Analysis Sample of Coal and Coke Using High Temperature Tube Furnace Combustion Methods, **05.05**
D 4240 Discontinued 1995; Test Method for Airborne Asbestos Concentration in Workplace Atmosphere
D 4241–92 Practice for Design of Gas Turbine Generator Lubricating Oil Systems, **05.02**
D 4242–91(1995)$^{\epsilon 1}$ Test Method for Glass Plate Flow for Thermosetting Coating Powders, **10.02**
D 4243–86(1993)$^{\epsilon 1}$ Method for Measurement of Average Viscometric Degree of Polymerization of New and Aged Electrical Papers and Boards, **10.02**
D 4244–95 Specification for General-Purpose, Heavy-Duty, and Extra-Heavy Duty Acrylonitrile-Butadiene/Polyvinyl Chloride (NBR/PVC) Jackets for Wire and Cable, **10.02**
D 4245–89 Specification for Ozone-Resistant Thermoplastic Elastomer Insulation for Wire and Cable, 90°C Dry—75°C Wet Operation, **10.02**
D 4246–89 Specification for Ozone-Resistant Thermoplastic Elastomer Insulation for Wire and Cable, 90°C Operation, **10.02**
D 4247–95 Specification for General-Purpose Black Heavy-Duty and Black Extra-Heavy Duty Polychloroprene Jackets for Wire and Cable, **10.02**
D 4248–92 Practice for Design of Steam Turbine Generator Oil Systems, **05.02**
D 4249–83(1992)$^{\epsilon 1}$ Test Method for Enumeration of Candida Albicans in Water, **11.02**

D 5646–96 Terminology of Basic Sewing Machine Stitches for Home Use, **07.02**
D 5647–95 Guide for Measuring Hairiness of Yarns by the Photo-Electric Apparatus, **07.02**
D 5648–94 Test Method for Torque-Tension Relationship of Adhesives Used on Threaded Fasteners (Lubricity), **15.06**
D 5649–94 Test Method for Torque Strength of Adhesives Used on Threaded Fasteners, **15.06**
D 5650–95 Test Method for Use Resistance to Bending of Paper of Low Bending Stiffness (Taber-Type Tester in 0 to 10 Taber Stiffness Unit Configuration, **15.09**
D 5651–95a Test Method for Surface Bond Strength of Wood-Base Fiber and Particle Panel Materials, **04.10**
D 5652–95 Test Methods for Bolted Connections in Wood and Wood-Base Products, **04.10**
D 5653–95 Specification for Copper bis(Dimethyldithiocarbamate), **04.10**
D 5654–95 Specification for Ammoniacal Copper Quat Type B (ACQ-B), **04.10**
D 5655–95 Test Method of Analysis of Copper Dimethyldithiocarbamate (CDDC) Treated Wood by Colorimetry, **04.10**
D 5656–95 Test Method for Thick Adherend Metal Lap-Shear Joints for Determination of the Stress-Strain Behavior of Adhesives in Shear by Tension Loading, **15.06**
D 5657–95 Test Method for Fluid Tightness Ability of Adhesives Used on Threaded Fasteners, **15.06**
D 5658–95 Practice for Sampling Unconsolidated Waste from Trucks, **11.04**
D 5659–95 Test Method for Chlorophenoxy Acid Herbicides in Waste Using HPLC, **11.04**
D 5660–96 Test Method for Assessing the Microbial Detoxification of Chemically Contaminated Water and Soil Using a Toxicity Test with a Luminescent Marine Bacterium, **11.04**
D 5661–95 Test Method for Relative Solvency of Petroleum Oils by the PKP Method, **06.03**
D 5662–96a Test Method for Determining Automotive Gear Oil Compatibility with Typical Oil Seal Elastomers, **05.03**
D 5663–95 Guide for Validating Recycled Content in Packaging Paper and Paperboard, **15.09**
D 5664–95 Test Method for Evaluating the Effects of Fire-Retardant Treatments and Elevated Temperatures on Strength Properties of Fire-Retardant Treated Lumber, **04.10**
D 5665–97 Specification for Thermoplastic Fabrics Used in Cold-Applied Roofing and Waterproofing, **04.04**
D 5686–95 Test Method for p-Phenylenediamine Antidegradants—Purity by High Performance Liquid Chromatography, **09.01**
D 5667–95 Test Method for Rubber from Synthetic Sources—Total and Water Soluble Ash, **09.01**
D 5668–95 Test Method for Rubber from Synthetic Sources—Volatile Matter, **09.01**
D 5669–95 Test Method for Rubber—Evaluation of Residual Unsaturation in Hydrogenated Nitrile Rubber (HNBR) by Curemeter Testing, **09.01**
D 5670–95 Test Method for Rubber—Determination of Residual Unsaturation in Hydrogenated Nitrile Rubber (HNBR) by Infrared Spectrophotometry, **09.01**
D 5671–95 Practice for Polishing and Etching Coal Samples for Microscopical Analysis by Reflected Light, **05.05**
D 5672–95 Test Method for Flexible Cellular Materials—Measurement of Indentation Force Deflection Using a 25-mm (1 in.) Deflection Technique, **08.03**
D 5673–96 Test Method for Elements in Water by Inductively Coupled Plasma-Mass Spectrometry, **11.01**
D 5674–95 Guide for Operation of a Gaging Station, **11.02**
D 5675–95a Specification for Fluoropolymer Micro Powders, **08.03**
D 5676–95 Specification for Recycled Polystyrene Molding and Extrusion Materials, **08.03**
D 5677–95 Specification for Fiberglass (Glass-Fiber-Reinforced Thermosetting-Resin) Pipe and Pipe Fittings, Adhesive Bonded Joint Type, for Aviation Jet Turbine Fuel Lines, **08.04**
D 5678–95 Test Method for Freeze/Thaw Resistance of Wax Emulsion Floor Polish, **15.04**
D 5679–95a Practice for Sampling Consolidated Solids in Drums or Similar Containers, **11.04**
D 5680–95a Practice for Sampling Unconsolidated Solids in Drums or Similar Containers, **11.04**
D 5681–95 Terminology for Waste and Waste Management, **11.04**
D 5682–95 Test Methods for Electrical Resistivity of Liquid Paint and Related Materials, **06.01**
D 5683–95 Test Method for the Flexibility of Roofing and Waterproofing Materials and Membranes, **04.04**
D 5684–95c Terminology Relating to Pile Floor Coverings, **07.02**
D 5685–95 Specification for "Fiberglass" (Glass-Fiber-Reinforced Thermosetting-Resin) Pressure Pipe Fittings, **08.04**
D 5686–95 Specification for "Fiberglass" (Glass-Fiber-Reinforced Thermosetting-Resin) Pipe and Pipe Fittings, Epoxy Resin for Condensate Return Lines, Adhesive Bonded Joint Type, **08.04**
D 5687/D5687M–95 Guide for Preparation of Flat Composite Panels with Processing Guidelines for Specimen Preparation, **15.03**
D 5688–96 Terminology for Sampling and Monitoring of Waste, **11.04**
D 5689–96 Terminology for Characterization of Waste, **11.04**
D 5690–96 Terminology for Land Management of Waste, Including Liners for Management Areas, **11.04**
D 5692–96 Terminology for Thermal Treatment of Waste, **11.04**
D 5693–96 Terminology for Non-Thermal Treatment of Waste, **11.04**
D 5694–96 Terminology for Waste Minimization, **11.04**
D 5695–96 Terminology for Remediation of Sites Contaminated by Wastes, **11.04**
D 5696–96 Terminology for Waste-Derived Fuels, **11.04**
D 5697–96 Terminology for Materials Recovery from Waste, **11.04**
D 5698–96 Terminology for Applications of Materials Recovered from Waste, **11.04**
D 5699–96 Terminology for Waste Processing and Unit Operations, **11.04**
D 5700–96 Terminology for Medical Waste Management, **11.04**
D 5701–96 Terminology for Injection Wells, **11.04**
D 5702–95 Practice for Field Sampling of Coating Films for Analysis for Heavy Metals, **06.02**
D 5703–95 Practice for Preparatory Surface Cleaning for Clay Brick Masonry, **06.02**
D 5704–96 Test Method for Evaluation of the Thermal and Oxidative Stability of Lubricating Oils Used for Manual Transmissions and Final Drive Axles, **05.03**
D 5705–95 Test Method for Measurement of Hydrogen Sulfide in the Vapor Phase Above Residual Fuel Oils, **05.03**
D 5706–95 Test Method for Determining Extreme Pressure Properties of Lubricating Greases Using a High-Frequency, Linear-Oscillation (SRV) Test Machine, **05.03**
D 5707–95 Test Method for Measuring Friction and Wear Properties of Lubricating Grease Using a High-Frequency, Linear-Oscillating (SRV) Test Machine, **05.03**
D 5708–95a Test Methods for Determination of Nickel, Vanadium and Iron in Crude Oils and Residual Fuels by Inductively-Coupled Plasma (ICP) Atomic Emission Spectrometry, **05.03**
D 5709–95 Test Method for Sieve Analysis of Petroleum Coke, **05.03**
D 5710–95 Specification for Trinidad Lake Modified Asphalt, **04.03**
D 5711–95 Test Method for Adherent Fines Test, **04.03**
D 5712–95 Test Method for the Analysis of Protein in Natural Rubber and Its Products, **09.02**
D 5713–96 Test Method for Analysis of High Purity Benzene for Cyclohexane Feedstock by Capillary Gas Chromatography, **06.04**
D 5714–95 Specification for Content of Digital Geospatial Metadata, **04.09**
D 5715–95 Test Method for Estimating the Degree of Humification of Peat and Other Organic Soils (Visual/Manual Method), **04.09**
D 5716–95 Test Method for Measure the Rate of Well Discharge by Circular Orifice Weir, **04.09**
D 5717–95 Guide for Design of Ground-Water Monitoring Systems in Karst and Fractured-Rock Aquifers, **04.09**
D 5718–95 Guide for Documenting a Ground-Water Flow Model Application, **04.09**
D 5719–95 Guide to Simulation of Subsurface Air Flow Using Ground-Water Flow Modeling Codes, **04.09**
D 5720–95 Practice for Static Calibration of Electronic Transducer Based Pressure Measurement Systems for Geotechnical Purposes, **04.09**
D 5721–95 Practice for Air-Oven Aging of Polyolefin Geomembranes, **04.09**
D 5722–95 Practice for Performing Accelerated Outdoor Weathering of Factory Coated Embossed Hardboard Using Concentrated Natural Sunlight and a Soak-Freeze-Thaw Procedure, **06.02**
D 5723–95 Practice for Determination of Chromium Treatment Weight on Metal Substrates by X-Ray Fluorescene, **06.02**
D 5724–96a Specification for Gouache Paints, **06.02**
D 5725–95 Test Method for Surface Wettability and Absorbency of Sheeted Materials Using an Automated Contact Angle Tester, **15.09**
D 5726–97 Specification for Thermoplastic Fibers Used in Hot-Applied Roofing and Waterproofing, **04.04**
D 5727–95 Specification for Emulsified Refined Coal Tar (Mineral Colloid Type), **04.04**
D 5728–95 Specification for Securement of Cargo in Intermodal and Unimodal Surface Transport, **15.09**
D 5729–95 Test Method for Thickness of Nonwoven Fabrics, **07.02**
D 5730–96 Guide for Site Characterization for Environmental Purposes With Emphasis on Soil, Rock, the Vadose Zone and Ground Water, **04.09**
D 5731–95 Test Method for Determination of the Point Load Strength Index of Rock, **04.09**
D 5732–95 Test Method for Stiffness of Nonwoven Fabrics Using the Cantilever Test, **07.02**
D 5733–95 Test Method for Tearing Strength of Nonwoven Fabrics by the Trapezoid Procedure, **07.02**
D 5734–95 Test Method for Tearing Strength of Nonwoven Fabrics by Falling-Pendulum (Elmendorf) Apparatus, **07.02**
D 5735–95 Test Method for Tearing Strength of Nonwoven Fabrics by the Tongue (Single Rip) Procedure (Constant-Rate-Of-Extension Tensile Testing Machine), **07.02**
D 5736–95 Test Method for Thickness of Highloft Nonwoven Fabrics, **07.02**
D 5737–95 Guide for Methods for Measuring Well Discharge, **04.09**
D 5738–95 Guide for Displaying the Results of Chemical Analyses of Ground Water for Major Ions and Trace Elements—Diagrams for Single Analyses, **04.09**
D 5739–95 Practice for Oil Spill Source Identification by Gas Chromatography and Positive Ion Electron Impact Low Resolution Mass Spectrometry, **11.02**
D 5740–95 Guide for Writing Material Standards in the D4000 Format, **08.03**
D 5741–96 Practice for Characterizing Surface Wind Using a Wind Vane and Rotating Anemometer, **11.03**

E 194–90 Test Method for Acid-Insoluble Content of Copper and Iron Powders, **02.05**

E 195 Discontinued 1984; Methods for Chemical Analysis of Reactor and Commercial Columbium

E 196–95 Practice for Gravity Load Testing of Floors and Flat Roofs, **04.11**

E 197 Discontinued 1981; Specification for Enclosures and Servicing Units for Tests Above and Below Room Temperature

E 198 Discontinued 1968; Method for Radiochemical Determination of Cesium-137 in Aqueous Solutions

E 199 Discontinued 1966; Recommended Practice for Measuring Neutron Flux Environment for Reactor Irradiated Specimens; Replaced by E 261 to E 266

E 200–91 Practice for Preparation, Standardization, and Storage of Standard and Reagent Solutions for Chemical Analysis, **15.05**

E 201–96 Test Method for Calculation of Volume and Weight of Industrial Chemical Liquids, **15.05**

E 202–94a Test Methods for Analysis of Ethylene Glycols and Propylene Glycols, **15.05**

E 203–96 Test Method for Water Using Karl Fischer Reagent, **15.05**

E 204–92 Practices for Identification of Material by Infrared Absorption Spectroscopy, Using the ASTM Coded Band and Chemical Classification Index, **03.06**

E 205–96 Specification for Oxygen Combustion Flask, **14.02**

E 206 Discontinued 1988; Definitions of Terms Relating to Fatigue Testing and the Statistical Analysis of Fatigue Data; Replaced by E 1150

E 207–96 Method of Thermal EMF Test of Single Thermoelement Materials By Comparison With a Reference Thermoelement of Similar EMF-Temperature Properties, **14.03**

E 208–95a Test Method for Conducting Drop-Weight Test to Determine Nil-Ductility Transition Temperature of Ferritic Steels, **03.01**

E 209–65(1993) Practice for Compression Tests of Metallic Materials at Elevated Temperatures with Conventional or Rapid Heating Rates and Strain Rates, **03.01**

E 210–63(1995) Specification for Microscope Objective Thread, **14.02**

E 211–82(1995) Specification for Cover Glasses and Glass Slides for Use in Microscopy, **14.02**

E 212–66(1993)$^{\varepsilon 1}$ Test Method for Spectrographic Analysis of Carbon and Low-Alloy Steel by the Rod-to-Rod Technique, **03.05**

E 213–93 Practice for Ultrasonic Examination of Metal Pipe and Tubing, **03.03**

E 214–68(1996) Practice for Immersed Ultrasonic Examination by the Reflection Method Using Pulsed Longitudinal Waves, **03.03**

E 215–87(1992)$^{\varepsilon 1}$ Practice for Standardizing Equipment for Electromagnetic Examination of Seamless Aluminum-Alloy Tube, **03.03**

E 216 Discontinued 1969; Recommended Practice for Measuring Coating Thickness by Magnetic or Electromagnetic Methods; Replaced by E 376

E 217 Discontinued 1992; Test Method for Uranium by Controlled-Potential Coulometry

E 218 Discontinued 1968; Method for Radiochemical Determination of Cesium-137 in Aqueous Solutions (Chloroplatinate Method)

E 219–80(1995) Test Method for Atom Percent Fission in Uranium Fuel (Radiochemical Method), **12.02**

E 220–96 Test Method for Calibration of Thermocouples by Comparison Techniques, **14.03**

E 221 Redesignated F 221

E 222–94 Test Methods for Hydroxyl Groups by Acetic Anhydride Acetylation, **15.05**

E 223–96 Test Methods for Analysis of Sulfuric Acid, **15.05**

E 224–96 Test Methods for Analysis of Hydrochloric Acid, **15.05**

E 225 Discontinued 1983; Method for Spectrographic Determination of Magnesium in Cast Iron by the Solution-Rotating Disk Technique

E 226 Discontinued 1987; Method for Spectrochemical Analysis of Magnesium Alloys for Calcium by Flame Photometry

E 227–90(1996) Test Method for Optical Emission Spectrometric Analysis of Aluminum and Aluminum Alloys by the Point-to-Plane Technique, **03.05**

E 228–95 Test Method for Linear Thermal Expansion of Solid Materials With a Vitreous Silica Dilatometer, **14.02**

E 229–70(1981)$^{\varepsilon 1}$ Test Method for Shear Strength and Shear Modulus of Structural Adhesives, **15.06**

E 230–96 Temperature-Electromotive Force (EMF) Tables for Standardized Thermocouples, **14.03**

E 231 Discontinued 1985; Method for Static Determination of Young's Modulus of Metals at Low and Elevated Temperatures

E 232 Redesignated F 232

E 233 Discontinued 1996; Test Method for Assay of n-Butyllithium Solutions

E 234–90 Test Method for Total Bromine Number of Unsaturated Aliphatic Chemicals, **15.05**

E 235–88(1996) Specification for Thermocouples, Sheathed, Type K, for Nuclear or for Other High-Reliability Applications, **14.03**

E 236–66(1996) Specification for Apparatus For Microdetermination Of Alkoxyl Groups, **14.02**

E 237–94a Specification for Microvolumetric Vessels (Volumetric Flasks and Centrifuge Tubes), **14.02**

E 238–84(1996) Method for Pin-Type Bearing Test of Metallic Materials, **03.01**

E 239 Redesignated G 26

E 240 Redesignated G 27

E 241–90 Practices for Increasing Durability of Building Constructions Against Water-Induced Damage, **04.11**

E 242–95 Reference Radiographs for Appearances of Radiographic Images as Certain Parameters Are Changed, **03.03**

E 243–90 Practice for Electromagnetic (Eddy-Current) Examination of Copper and Copper-Alloy Tubes, **03.03**

E 244–80(1995) Test Method for Atom Percent Fission in Uranium and Plutonium Fuel (Mass Spectrometric Method), **12.02**

E 245 Discontinued 1968; Method for Colorimetric Determination of Uranium in Aqueous Solutions; Replaced by E 318

E 246–95 Test Method for Iron in Iron Ores and Related Materials by Hydrogen Sulfide Reduction and Dichromate Titration, **03.05**

E 247–96 Test Method for Determination of Silica in Manganese Ores, Iron Ores and Related Materials by Gravimetry, **03.05**

E 248–97 Test Method for Chemical Analysis of Manganese in Manganese Ores, **03.05**

E 249 Discontinued 1974; Specification for Standard Tire for Pavement Skid Resistance Tests; Replaced by E 112

E 250–76(1994)$^{\varepsilon 1}$ Practice for Use of CODEN, (CODEN issued separately as ASTM DS 23), **03.06**

E 251–92 Test Methods for Performance Characteristics of Metallic Bonded Resistance Strain Gages, **03.01**

E 252–84(1994) Test Method for Thickness of Thin Foil and Film by Weighing, **02.02**

E 253–97 Terminology Relating to Sensory Evaluation of Materials and Products, **15.07**

E 254 Redesignated F 254

E 255–91(1997) Practice for Sampling Copper and Copper Alloys for Determination of Chemical Composition, **03.05**

E 256–91 Test Method for Chlorine in Organic Compounds by Sodium Peroxide Bomb Ignition, **15.05**

E 257–93 Test Method for Sulfur in Organic Compounds by Sodium Peroxide Bomb Ignition, **15.05**

E 258–67(1996)$^{\varepsilon 1}$ Test Method for Total Nitrogen in Organic Materials by Modified Kjeldahl Method, **15.05**

E 259–93 Practice for Preparation of Pressed Powder White Reflectance Factor Transfer Standards for Hemispherical Geometry, **06.01**

E 260–96 Practice for Packed Column Gas Chromatography, **14.02**

E 261–96 Practice for Determining Neutron Fluence Rate, Fluence, and Spectra by Radioactivation Techniques, **12.02**

E 262–86(1991) Method for Determining Thermal Neutron Reaction and Fluence Rates by Radioactivation Techniques, **12.02**

E 263–93 Test Method for Measuring Fast-Neutron Reaction Rates by Radioactivation of Iron, **12.02**

E 264–92(1996) Test Method for Measuring Fast-Neutron Reaction Rates by Radioactivation of Nickel, **12.02**

E 265–93 Test Method for Measuring Reaction Rates and Fast-Neutron Fluences by Radioactivation of Sulfur-32, **12.02**

E 266–92(1996) Test Method for Measuring Fast-Neutron Reaction Rates by Radioactivation of Aluminum, **12.02**

E 267–90(1995) Test Method for Uranium and Plutonium Concentrations and Isotopic Abundances, **12.02**

E 268 Discontinued 1991; Terminology Relating to Electromagnetic Testing; Replaced by E 1316

E 269 Discontinued 1991; Definitions of Terms Relating to Magnetic Particle Examination; Replaced by E 1316

E 270 Discontinued 1991; Terminology Relating to Liquid Penetrant Examination; Replaced by E 1316

E 271–91 Test Methods for Analysis of Aqueous Hydrofluoric Acid, **15.05**

E 272–95 Reference Radiographs for High-Strength Copper-Base and Nickel-Copper Alloy Castings, **03.03**

E 273–93 Practice for Ultrasonic Examination of Longitudinal Welded Pipe and Tubing, **03.03**

E 274–90 Test Method for Skid Resistance of Paved Surfaces Using a Full-Scale Tire, **04.03**

E 275–93 Practice for Describing and Measuring Performance of Ultraviolet, Visible, and Near Infrared Spectrophotometers, **03.06**

E 276–93 Test Method for Particle Size or Screen Analysis at No. 4 (4.75-mm) Sieve and Finer for Metal-Bearing Ores and Related Materials, **03.05**

E 277 Discontinued 1990; Test Method for Total Iron in Iron Ores by Stannous Chloride Reduction and Dichromate Titration

E 278–96 Test Method for Phosphorus in Iron Ores (Titrimetric), **03.05**

E 279–97 Test Method for Determination of Abrasion Resistance of Iron Ore Pellets and Sinter (Tumbler Test), **03.05**

E 280–93 Reference Radiographs for Heavy-Walled (4½ to 12-in. (114 to 305-mm)) Steel Castings, **03.03**

E 281 Discontinued 1983; Method for Spectrographic Analysis of Carbon and Low-Alloy Steel by the Pellet Technique

E 282 Discontinued 1983; Method for Spectrographic Analysis of Carbon and Low-Alloy Steel by the Point-to-Plane Technique

E 283–91 Test Method for Determining the Rate of Air Leakage Through Exterior Windows, Curtain Walls, and Doors Under Specified Pressure Differences Across the Specimen, **04.11**

E 284–96c Terminology of Appearance, **06.01**

E 285–80(1996)$^{\varepsilon 1}$ Test Method for Oxyacetylene Ablation Testing of Thermal Insulation Materials, **15.03**

E 286 Discontinued 1991; Test Method for Surface Flammability of Building Materials Using an 8-ft (2.44-m) Tunnel Furnace

E 287–94 Specification for Laboratory Glass Graduated Burets, **14.02**

E 288–94 Specification for Laboratory Glass Volumetric Flasks, **14.02**

E 289–95 Test Method for Linear Thermal Expansion of Rigid Solids with Interferometry, **14.02**

E 768–80(1993) Practice for Preparing and Evaluating Specimens for Automatic Inclusion Assessment of Steel, **03.01**
E 769–85(1992) Test Methods for Odor of Methanol, Ethanol, n-Propanol, and Isopropanol, **15.07**
E 770 Discontinued 1992; Method for Classifying Pavement Surface Textures
E 771–90(1996) Test Method for Spontaneous Heating Tendency of Materials, **14.02**
E 772–87(1993) Terminology Relating to Solar Energy Conversion, **12.02**
E 773–97 Test Method for Accelerated Weathering of Sealed Insulating Glass Units, **04.07**
E 774–97 Specification for Classification of the Durability of Sealed Insulating Glass Units, **04.07**
E 775–87(1996) Test Methods for Total Sulfur in the Analysis Sample of Refuse-Derived Fuel, **11.04**
E 776–87(1996) Test Method for Forms of Chlorine in Refuse-Derived Fuel, **11.04**
E 777–87(1996) Test Method for Carbon and Hydrogen in the Analysis Sample of Refuse-Derived Fuel, **11.04**
E 778–87(1996) Test Method for Nitrogen in the Analysis Sample of Refuse-Derived Fuel, **11.04**
E 779–87(1992)$^{\epsilon 1}$ Test Method for Determining Air Leakage Rate by Fan Pressurization, **04.11**
E 780–92 Test Method for Measuring the Insulation Resistance of Sheathed Thermocouple Material at Room Temperature, **14.03**
E 781–86(1996) Practice for Evaluating Absorptive Solar Receiver Materials When Exposed to Conditions Simulating Stagnation in Solar Collectors With Cover Plates, **12.02**
E 782–95 Practice for Exposure of Cover Materials for Solar Collectors to Natural Weathering Under Conditions Simulating Operational Mode, **12.02**
E 783–93 Test Method for Field Measurement of Air Leakage Through Installed Exterior Windows and Doors, **04.11**
E 784–89(1996) Specification for Clamps, Utility, Laboratory, and Holders, Buret and Clamp, **14.02**
E 785–81(1996) Specification for Crucibles, Ignition, Laboratory, Metal, **14.02**
E 786–81(1996) Specification for Dishes, Evaporating, Platinum, **14.02**
E 787–81(1996) Specification for Disposable Glass Micro Blood Collection Pipets, **14.02**
E 788–93 Specification for Pipet, Blood Diluting, **14.02**
E 789–95 Test Method for Dust Explosions in a 1.2 Litre Closed Cylindrical Vessel, **14.02**
E 790–87(1996) Test Method for Residual Moisture in Refuse-Derived Fuel Analysis Sample, **11.04**
E 791–90(1996) Test Method for Calculating Refuse-Derived Fuel Analysis Data from As-Determined to Different Bases, **11.04**
E 792–95 Guide for Selection of a Clinical Laboratory Information Management System, **14.01**
E 793–95 Test Method for Heats of Fusion and Crystallization by Differential Scanning Calorimetry, **14.02**
E 794–95 Test Method for Melting And Crystallization Temperatures by Thermal Analysis, **14.02**
E 795–93 Practices for Mounting Test Specimens During Sound Absorption Tests, **04.06**
E 796–94 Test Method for Ductility Testing of Metallic Foil, **03.01**
E 797–95 Practice for Measuring Thickness by Manual Ultrasonic Pulse-Echo Contact Method, **03.03**
E 798–96 Practice for Conducting Irradiations at Accelerator-Based Neutron Sources, **12.02**
E 799–92 Practice for Determining Data Criteria and Processing for Liquid Drop Size Analysis, **14.02**
E 800–95 Guide for Measurement of Gases Present or Generated During Fires, **04.07**
E 802–95 Reference Radiographs for Gray Iron Castings Up to 4½ in. (114 mm) in Thickness, **03.03**
E 803–91(1996) Method for Determining the L/D Ratio of Neutron Radiography Beams, **03.03**
E 804 Discontinued 1994; Practice for Calibration of the Ultrasonic Test System by Extrapolation Between Flat Bottom Hole Sizes
E 805–94 Practice for Identification of Instrumental Methods of Color or Color-Difference Measurement of Materials, **06.01**
E 806–93 Test Method for Carbon Tetrachloride and Chloroform in Liquid Chlorine by Direct Injection (Gas Chromatographic Procedure), **15.05**
E 807–96 Practice for Metallographic Laboratory Evaluation, **03.01**
E 808–94 Practice for Describing Retroreflection, **06.01**
E 809–94a Practice for Measuring Photometric Characteristics of Retroreflectors, **06.01**
E 810–94 Test Method for Coefficient of Retroreflection or Retroreflective Sheeting, **06.01**
E 811–95 Practice for Measuring Colorimetric Characteristics of Retroreflectors Under Nighttime Conditions, **06.01**
E 812–91 Test Method for Crack Strength of Slow Bend, Precracked Charpy Specimens of High-Strength Metallic Materials, **03.01**
E 813–89 Test Method for J_{IC}, a Measure of Fracture Toughness, **03.01**
E 814–94b Test Method for Fire Tests of Through-Penetration Fire Stops, **04.07**
E 815–94 Test Method for Calcium Fluoride in Flourspar by Complexometric Titration, **03.06**
E 816–95 Specification for Calibration of Pyrheliometers by Comparison to Reference Pyrheliometers, **14.02**
E 817 Not yet assigned
E 818 Not yet assigned
E 819–93 Test Method for Trace Amounts of Arsenic in Organic Industrial Chemicals, **15.05**
E 820 Discontinued 1988; Practice for Determining Absolute Absorbed Dose Rates for Electron Beams
E 821–96 Practice for Measurement of Mechanical Properties During Charged-Particle Irradiation, **12.02**
E 822–92(1996) Practice for Determining Resistance of Solar Collector Covers to Hail by Impact With Propelled Ice Balls, **12.02**
E 823–81(1995)$^{\epsilon 1}$ Practice for Nonoperational Exposure and Inspection of a Solar Collector, **12.02**
E 824–94 Test Method for Transfer of Calibration From Reference to Field Radiometers, **14.02**
E 825 Discontinued 1996; Specification for Phase Change-Type Disposable Fever Thermometer for Intermittent Determination of Human Temperature
E 827–95 Practice for Elemental Identification by Auger Electron Spectroscopy, **03.06**
E 828–81(1992) Test Method for Designating the Size of RDF-3 From Its Sieve Analysis, **11.04**
E 829–94 Test Method for Preparing RDF Laboratory Samples for Analysis, **11.04**
E 830–87(1996) Test Method for Ash in the Analysis Sample of Refuse-Derived Fuel, **11.04**
E 831–93 Test Method for Linear Thermal Expansion of Solid Materials by Thermomechanical Analysis, **14.02**
E 832–81(1993)$^{\epsilon 1}$ Specification for Laboratory Filter Papers, **14.02**
E 833–97 Terminology of Building Economics, **04.11**
E 834–81(1992) Practice for Determination of Vacuum Chamber Gaseous Environment Using a Cold Finger, **15.03**
E 835M Discontinued 1990; Replaced by E 835/E 835M
E 835/E835M–93 Guide for Modular Coordination of Clay and Concrete Masonry Units, **04.11**
E 836 Not yet assigned
E 837–95 Test Method for Determining Residual Stresses by the Hole-Drilling Strain-Gage Method, **03.01**
E 838 Discontinued 1992; Practice for Performing Accelerated Outdoor Weathering Using Concentrated Natural Sunlight
E 839–96 Test Methods for Sheathed Thermocouples and Sheathed Thermocouple Material, **14.03**
E 840–95 Practice for Using Flame Photometric Detectors in Gas Chromatography, **14.02**
E 841–94 Test Method for Copper in Iron Ores and Related Materials by Atomic Absorption Spectroscopy, **03.06**
E 842 Discontinued 1991; Specification for Lawn Buildings
E 843 Discontinued 1991; Specification for Patio Covers, Carports, and Canopies
E 844–86(1991) Guide for Sensor Set Design and Irradiation for Reactor Surveillance, E 706(IIC), **12.02**
E 845 Discontinued 1988; Method for Calibration of Dosimeters Against an Adiabatic Calorimeter for Use in Flash X-Ray Fields
E 846 Discontinued 1991; Matrix for Light-Water Reactor Spent-Fuel Transportation
E 847 Not yet assigned
E 848–94 Guide for Safety and Health Requirements Relating to Occupational Exposure to Water-Insoluble Chromates, **06.01**
E 849 Discontinued 1995; Practice for Safety and Health Requirements Relating to Occupational Exposure to Asbestos
E 850–95 Practice for Use of Inorganic Process Wastes as Structural Fill, **11.04**
E 851–81(1994)$^{\epsilon 1}$ Practice for Evaluation of Spectrochemical Laboratories, **03.06**
E 852–94a Test Methods for C_4-C_{13} Plasticizer Grade Alcohols, **15.05**
E 853–87(1995) Practice for Analysis and Interpretation of Light-Water Reactor Surveillance Results, E 706(IA), **12.02**
E 854–90 Test Method for Application and Analysis of Solid State Track Recorder (SSTR) Monitors for Reactor Surveillance, E 706(IIIB), **12.02**
E 855–90(1995) Test Methods for Bend Testing of Metallic Flat Materials for Spring Applications Involving Static Loading, **03.01**
E 856–83(1993) Definitions of Terms and Abbreviations Relating to Physical and Chemical Characteristics of Refuse-Derived Fuel, **11.04**
E 857–87(1993) Practice for Conducting Subacute Dietary Toxicity Tests with Avian Species, **11.05**
E 858 Discontinued 1991; Test Method for Birefringence in Fibers of Circular Cross Section by a Variable Compensator
E 859–93 Test Method for Air Erosion of Sprayed Fire-Resistive Materials (SFRMs) Applied to Structural Members, **04.11**
E 860–97 Practice for Examining and Testing Items that Are or May Become Involved in Products Liability Litigation, **14.02**
E 861–94 Practice for Evaluating Thermal Insulation Materials for Use in Solar Collectors, **12.02**
E 862–82 Practice for Screening Polymeric Containment Materials for the Effects of Heat and Heat Transfer Fluids in Solar Heating and Cooling Systems, **12.02**
E 863–82(1996) Practice for Describing Flame Atomic Absorption Spectroscopy Equipment, **03.06**
E 864–96 Practice for Surface Preparation of Aluminum Alloys to be Adhesively Bonded in Honeycomb Shelter Panels, **04.11**
E 865–95 Specification for Structural Film Adhesives for Honeycomb Sandwich Panels, **04.11**

EXHIBIT 26

1998 Annual Book of ASTM Standards

Index

Alphanumeric List

ASTM Standards

Standards:

Specifications	2850
Test Methods	6528
Terminology	162
Total	9540

Each ASTM standard has a unique serial designation. It is comprised of a capital letter indicating general classification (A, ferrous metals; B, nonferrous metals; C, cementitious, cermanic, concrete, and masonry materials; D, miscellaneous materials; E, miscellaneous subjects; F, materials for specific applications; G, corrosion, deterioration, and degradation of materials; ES, emergency standards; P, proposals; PS, provisional standards), a serial number (one to four digits), a dash, and the year of issue.

In each serial designation, the number following the dash indicates the year of original adoption as standard or, in the case of revision, the year of last revision. Thus, standards adopted or revised during the year 1998 have as their final number, 98. A letter following this number indicates more than one revision during that year, that is 98a indicates the second revision in 1998, 98b the third revision, etc. Standards that have been reapproved without change are indicated by the year of last reapproval in parentheses as part of the designation number, for example, (1998). A superscript epsilon indicates an editorial change since the last revision or reapproval; ϵ1 for the first change, ϵ2 for the second, etc.

If a standard is written in acceptable metric units and has a companion standard written in inch-pound units (or other units), the metric standard is identified by a letter M after the serial number; this standard contains "hard metric" units.

If a standard is written in inch-pound units (or other units) and acceptable metric units, the document is identified by a dual alphanumeric designation.

When reference is made to a standard, the *complete* designation should be given. Best practice is to state the *designation and title.*

The boldface number(s) following the title refer to the volume(s) of the *Annual Book of ASTM Standards* in which the standard appears.

This list includes only those standards which appear in the 1998 edition of each volume of the *Annual Book of ASTM Standards.* New and revised standards that were approved after the closing date for the volume are available as separate reprints and will be listed in next year's edition.

Each ASTM standard is available as a separate reprint from ASTM. Price and order information are available from ASTM Customer Service, 100 Barr Harbor Drive, West Conshohocken, PA 19428-2959, 610-832-9585.

A 193/A193M–97a Specification for Alloy-Steel and Stainless Steel Bolting Materials for High-Temperature Service, **01.01**
A 194/A194M–97 Specification for Carbon and Alloy Steel Nuts for Bolts for High-Pressure and High-Temperature Service, **01.01**
A 195 Discontinued—Replaced by A 502
A 196 Discontinued 1962: Guidelines for Cast Iron
A 197–87(1992) Specification for Cupola Malleable Iron, **01.02**
A 197M–87(1992) Specification for Cupola Malleable Iron [Metric], **01.02**
A 198 Discontinued 1947: Specification for Corrosion-Resistant Iron-Chromium and Iron-Chromium-Nickel Alloy Castings for General Application; Replaced by A 296, A 297
A 199/A199M Discontinued 1995; Specification for Seamless Cold-Drawn Intermediate Alloy-Steel Heat-Exchanger and Condenser Tubes; Replaced by A 200
A 200–94 Specification for Seamless Intermediate Alloy-Steel Still Tubes for Refinery Service, **01.01**
A 201 Discontinued 1967: Specification for Carbon-Silicon Steel Plates of Intermediate Tensile Ranges for Fusion-Welded Boilers and Other Pressure Vessels; Replaced by A 515, A 516
A 202/A202M–93 Specification for Pressure Vessel Plates, Alloy Steel, Chromium-Manganese-Silicon, **01.04**
A 203/A203M–97 Specification for Pressure Vessel Plates, Alloy Steel, Nickel, **01.04**
A 204/A204M–93 Specification for Pressure Vessel Plates, Alloy Steel, Molybdenum, **01.04**
A 205 Discontinued 1967: Specification for Iron and Steel Filler Metal (Arc-Welding Electrodes and Gas-Welding Rods); Replaced by A 233, A 251
A 206 Discontinued 1953: Specification for Seamless Ferritic Alloy-Steel Pipe for HIgh-Temperature Service; Replaced by A 335
A 207 Discontinued 1972: Specification for Rolled Wrought Iron Shapes and Bars
A 208 Discontinued 1941: Method of Test for Uniformity of Coating by the Preece Test (Copper Sulfate Dip) on Zinc or Steel Articles; Replaced by A 239
A 209/A209M–95 Specification for Seamless Carbon-Molybdenum Alloy-Steel Boiler and Superheater Tubes, **01.01**
A 210/A210M–96 Specification for Seamless Medium-Carbon Steel Boiler and Superheater Tubes, **01.01**
A 211 Discontinued 1993; Specification for Spiral-Welded Steel or Iron Pipe
A 212 Discontinued 1967: Specification for High Tensile Strength Carbon-Silicon Steel Plates for Boilers and Other Pressure Vessels; Replaced by A 515, A 516
A 213/A213M–95a Specification for Seamless Ferritic and Austenitic Alloy-Steel Boiler, Superheater, and Heat-Exchanger Tubes, **01.01**
A 214/A214M–96 Specification for Electric-Resistance-Welded Carbon Steel Heat-Exchanger and Condenser Tubes, **01.01**
A 215 Discontinued 1947: Specification for Mild-to-Medium-Strength Carbon-Steel Castings for General Application; Replaced by A 27
A 216/A216M–93$^{\epsilon 1}$ Specification for Steel Castings, Carbon, Suitable for Fusion Welding, for High-Temperature Service, **01.02**
A 217/A217M–95 Specification for Steel Castings, Martensitic Stainless and Alloy, for Pressure-Containing Parts Suitable for High-Temperature Service, **01.02**
A 218 Discontinued 1963: Specification for Zinc-Coated Steel Wire Strand (Class B and Class C Coatings); Replaced by A 475
A 219 Discontinued 1972: Methods of Test for Local Thickness of Electrodeposited Coatings; Replaced by B 244, B 487, B 499, B 504, B 529, B 530
A 220–88(1993)$^{\epsilon 1}$ Specification for Pearlitic Malleable Iron, **01.02**
A 220M–88(1993)$^{\epsilon 1}$ Specification for Pearlitic Malleable Iron Castings [Metric], **01.02**
A 221 Discontinued 1947: Specification for Corrosion-Resistant Iron-Chromium and Iron-Chromium-Nickel Alloy Castings for General Application; Replaced by A 296, A 297
A 222 Discontinued 1947: Specification for Corrosion-Resistant Iron-Chromium and Iron-Chromium-Nickel Alloy Castings for General Application; Replaced by A 296, A 297
A 223 Discontinued 1947: Specification for Corrosion-Resistant Iron-Chromium and Iron-Chromium-Nickel Alloy Castings for General Application; Replaced by A 296, A 297
A 224 Discontinued 1969: Recommended Practice for Conducting Plant Corrosion Tests; Replaced by G 4
A 225/A225M–93 Specification for Pressure Vessel Plates, Alloy Steel, Manganese-Vanadium-Nickel, **01.04**
A 226/A226M Discontinued 1997;Specification for Electric-Resistance-Welded Carbon Steel Boiler and Superheater Tubes for High-Pressure Service
A 227/A227M–93 Specification for Steel Wire, Cold-Drawn for Mechanical Springs, **01.03**
A 228/A228M–93 Specification for Steel Wire, Music Spring Quality, **01.03**
A 229/A229M–93 Specification for Steel Wire, Oil-Tempered for Mechanical Springs, **01.03**
A 230/A230M–96$^{\epsilon 1}$ Specification for Steel Wire, Oil-Tempered Carbon Valve Spring Quality, **01.03**
A 231/A231M–96 Specification for Chromium-Vanadium Alloy Steel Spring Wire, **01.03**
A 232/A232M–96 Specification for Chromium-Vanadium Alloy Steel Valve Spring Quality Wire, **01.03**
A 233 Discontinued 1970: Specification for Mild Steel Covered Arc-Welding Electrodes
A 234/A234M–97 Specification for Piping Fittings of Wrought Carbon Steel and Alloy Steel for Moderate and Elevated Temperatures, **01.01**
A 235 Discontinued 1975: Specification for Carbon Steel Forgings for General Industrial Use; Replaced by A 668
A 236 Discontinued 1981: Specification for Carbon Steel Forgings for Railway Use
A 237 Discontinued 1975: Specification for Alloy Steel Forgings for General Industrial Use; Replaced by A t668
A 238 Discontinued 1989: Specification for Forgings, Alloy Steel, for Railway Use; Replaced by A 730
A 239–95 Test Method for Locating the Thinnest Spot in a Zinc (Galvanized) Coating on Iron or Steel Articles by the Preece Test (Copper Sulfate Dip), **01.06**
A 240/A240M–97a Specification for Heat-Resisting Chromium and Chromium-Nickel Stainless Steel Plate, Sheet, and Strip for Pressure Vessels, **01.03**
A 241 Discontinued 1979: Specification for Hot-Worked High-Carbon Steel Tie Plates; Replaced by A 67
A 242/A242M–93a Specification for High-Strength Low-Alloy Structural Steel, **01.04**
A 243 Discontinued 1975: Specification for Carbon and Alloy Steel Ring, Hollow Cylinder, and Disk Forgings for General Industrial Use; Replaced by A 668
A 244 Discontinued 1947: Specification for Multiple-Wear Wrought Steel Wheels; Replaced by A 504
A 245 Discontinued 1972: Specification for Flat-Rolled Carbon Steel Sheets of Structural Quality; Replaced by A 570, A 611
A 246 Discontinued 1958: Specification for Light Gage Structural Quality Flat Rolled Carbon-Steel Sheets; Replaced by A 245
A 247–67(1990) Test Method for Evaluating the Microstructure of Graphite in Iron Castings, **01.02**
A 248 Discontinued 1972: Specification for Carbon-Steel and Alloy-Steel Blooms, Billets, and Slabs for Forgings; Replaced by A 273, A 274
A 249/A249M–96a Specification for Welded Austenitic Steel Boiler, Superheater, Heat-Exchanger, and Condenser Tubes, **01.01**
A 250/A250M–95 Specification for Electric-Resistance-Welded Ferritic Alloy-Steel Boiler and Superheater Tubes, **01.01**
A 251 Discontinued 1970: Specification for Iron and Steel Gas-Welding Rods; Replaced by A 251
A 252–96 Specification for Welded and Seamless Steel Pipe Piles, **01.01**
A 253 Discontinued 1962: Specification for Welded and Seamless Open-Hearth Iron Pipe
A 254–97 Specification for Copper-Brazed Steel Tubing, **01.01**
A 255–96 Test Method for End-Quench Test for Hardenability of Steel, **01.05**
A 256 Discontinued 1990; Method of Compression Testing of Cast Iron
A 257 Discontinued 1945: Methods of Permeability and Core Loss of Flat-Rolled Magnetic Materials using 28 cm Specimen [Replaced by A 34]
A 258 Discontinued 1945: Methods of Testing Magnetic Materials; Replaced by A 34
A 259 Discontinued 1945: Methods of Testing Magnetic Materials; Replaced by A 34
A 260 Discontinued 1966: Recommended Practice for Torsion Tests of Cast Iron
A 261 Discontinued 1959: Specification for Heat-Treated Carbon-Steel Bolting Material
A 262–93a Practices for Detecting Susceptibility to Intergranular Attack in Austenitic Stainless Steels, **01.03**
A 263–94a Specification for Corrosion-Resisting Chromium Steel-Clad Plate, Sheet, and Strip, **01.03**
A 264–94a Specification for Stainless Chromium-Nickel Steel-Clad Plate, Sheet, and Strip, **01.03**
A 265–94a Specification for Nickel and Nickel-Base Alloy-Clad Steel Plate, **01.03**
A 266/A266M–96 Specification for Carbon Steel Forgings for Pressure Vessel Components, **01.05**
A 267 Discontinued 1954: Specification for Lead Coating (Hot-Dip) on Iron or Steel Hardware
A 268/A268M–96 Specification for Seamless and Welded Ferritic and Martensitic Stainless Steel Tubing for General Service, **01.01**
A 269–96$^{\epsilon 1}$ Specification for Seamless and Welded Austenitic Stainless Steel Tubing for General Service, **01.01**
A 270–95a$^{\epsilon 2}$ Specification for Seamless and Welded Austenitic Stainless Steel Sanitary Tubing, **01.01**
A 271–96 Specification for Seamless Austenitic Chromium-Nickel Steel Still Tubes for Refinery Service, **01.01**
A 272 Discontinued 1945: Method of Magnetic Particle Testing and Inspection of Commercial Steel Castings; Replaced by E 109
A 273 Discontinued 1975: Specification for Carbon-Steel Blooms, Billets, and Slabs for Forgings; Replaced by A 711
A 274 Discontinued 1975: Specification for Alloy-Steel Blooms, Billets, and Slabs for Forgings; Replaced by A 711
A 275/A275M–96 Test Method for Magnetic Particle Examination of Steel Forgings, **01.05**
A 276–97 Specification for Stainless Steel Bars and Shapes, **01.03**
A 277 Discontinued 1952; Specification for Malleable Iron Flanges, Pipe Fittings, and Valve Parts for Railroad, Marine and Other Heavy Duty Service; Replaced by A 338
A 278–93 Specification for Gray Iron Castings for Pressure Containing Parts for Temperatures Up to 650°F, **01.02**
A 278M–93$^{\epsilon 1}$ Specification for Gray Iron Castings for Pressure-Containing Parts for Temperatures Up to 350°C [Metric], **01.02**

B. NONFERROUS METALS

B 1–95 Specification for Hard-Drawn Copper Wire, **02.03**
B 2–94 Specification for Medium-Hard-Drawn Copper Wire, **02.03**
B 3–95 Specification for Soft or Annealed Copper Wire, **02.03**
B 4 Discontinued 1981; Specification Tough-Pitch Lake Copper-Refinery Shapes
B 5–95 Specification for Electrolytic Tough-Pitch Copper Refinery Shapes, **02.01**
B 6–97 Specification for Zinc, **02.04**
B 7 Discontinued 1941; Specification for Copper-Base Alloys in Ingot Form for Sand Castings; Replaced by B 30
B 8–95 Specification for Concentric-Lay-Stranded Copper Conductors, Hard, Medium-Hard, or Soft, **02.03**
B 9–90 Specification for Bronze Trolley Wire, **02.03**
B 10 Discontinued 1934; Specification for Tin-Bronze and Leaded Tin-Bronze Sand Castings
B 11 Discontinued 1981; Specification for Copper Plates for Locomotive Fireboxes
B 12 Discontinued 1982; Specification for Copper Rods for Locomotive Staybolts; Replaced by B 133
B 13 Discontinued 1961; Specification for Seamless Copper Boiler Tubes
B 14 Discontinued 1955; Specification for Seamless Brass Boiler Tubes
B 15 Discontinued 1939; Specification for Copper and Copper-Base Alloy Forging Rod, Bar, and Shapes; Replaced by B 124
B 16–92 Specification for Free-Cutting Brass Rod, Bar, and Shapes for Use in Screw Machines, **02.01**
B 16M–92 Specification for Free-Cutting Brass Rod, Bar, and Shapes for Use in Screw Machines [Metric], **02.01**
B 17 Discontinued 1927; Specification for Bronze Castings in the Rough for Locomotive Wearing Parts; Replaced by B 66, B 67
B 18 Discontinued 1942; Methods of Testing Chemical Analysis of Lead, Tin, and Base Solder Metal; Replaced by E 46
B 19–95 Specification for Cartridge Brass Sheet, Strip, Plate, Bar, and Disks (Blanks), **02.01**
B 20 Discontinued 1940; Specification for Cartridge Brass Sheet, Strip, Plate, Bar, and Disks; Combined with B 19
B 21–96 Specification for Naval Brass, Rod, Bar, and Shapes,, **02.01**
B 21M–96 Specification for Naval Brass, Rod, Bar, and Shapes [Metric], **02.01**
B 22–95 Specification for Bronze Castings for Bridges and Turntables, **02.01**
B 23–94 Specification for White Metal Bearing Alloys (Known Commercially as Babbitt Metal), **02.04**
B 24 Discontinued 1956; Specification for Aluminum Ingots for Remelting
B 25 Discontinued 1946; Specification for Aluminum Alloy Sheet and Plate; Replaced by B 209
B 26/B26M–97 Specification for Aluminum-Alloy Sand Castings, **02.02**
B 27 Discontinued 1943; Methods of Testing Chemical Analysis for Sulfur in Special Brasses and Bronzes; Replaced by E 54
B 28 Discontinued 1943; Methods of Testing Chemical Analysis of Special Brasses and Bronzes; Replaced by E 54
B 30–96 Specification for Copper-Base Alloys in Ingot Form, **02.01**
B 31 Discontinued 1932; Specification for Copper-Base Alloys in Ingot Form for Sand Casting; Replaced by B 30
B 32–96 Specification for Solder Metal, **02.04**
B 33–94 Specification for Tinned Soft or Annealed Copper Wire for Electrical Purposes, **02.03**
B 34 Redesignated E 53
B 35 Discontinued 1942; Methods of Testing Chemical Analysis of Pig Lead; Replaced by E 37
B 36/B36M–95 Specification for Brass Plate, Sheet, Strip, and Rolled Bar, **02.01**
B 37–96 Specification for Aluminum for Use in Iron and Steel Manufacture, **02.02**
B 38 Discontinued 1942; Methods of Testing Chemical Analysis of Slab Zinc (Spelter); Replaced by E 40
B 39–79(1993) Specification for Nickel, **02.04**
B 40 Discontinued 1942; Photometric Methods for Chemical Analysis of Aluminum and Aluminum Base Alloys; Replaced by E 34
B 41 Discontinued 1942; Method for Testing Chemical Analysis of Nickel; Replaced by E 39
B 42–96 Specification for Seamless Copper Pipe, Standard Sizes, **02.01**
B 43–96 Specification for Seamless Red Brass Pipe, Standard Sizes, **02.01**
B 44 Discontinued 1937; Specification for Copper and Copper-Alloy Seamless Condenser Tubes and Ferrule Stock; Replaced by B 111
B 45 Discontinued 1942; Methods for Testing Chemical Analysis of Brasses
B 46 Discontinued 1943; Methods of Testing Chemical Analysis for Sulfur in Special Brasses and Bronzes; Replaced by E 54
B 47–95a Specification for Copper Trolley Wire, **02.03**
B 48–92 Specification for Soft Rectangular and Square Bare Copper Wire for Electrical Conductors, **02.03**
B 49–92 Specification for Copper Redraw Rod for Electrical Purposes, **02.01**
B 50 Discontinued 1937; Specification for Non-Ferrous Insect Screen Cloth
B 51 Discontinued 1945; Specification for Phospher Tin
B 52 Discontinued 1980; Specification for Phosphor Copper; Replaced by B 644
B 53 Discontinued 1980; Specification for Silicon Copper; Replaced by B 644
B 54 Discontinued 1941; Specification for High-Strength Yellow Brass (Manganese Bronze) and Leaded High-Strength Yellow Brass (Leaded Manganese Bronze) Sand Castings
B 55 Discontinued 1937; Specification for Seamless 70-30 Brass Condenser Tubes and Ferrule Stock
B 56 Discontinued 1937; Specification for Seamless Muntz Metal Condenser Tubes and Ferrule Stock; Replaced by B 111
B 57 Discontinued 1942; Specification for Copper-Alloy Condenser Tube Plates; Replaced by B 171
B 58 Discontinued 1946; Specification for Aluminum-Base Alloys in Ingot Form for Sand Castings; Replaced by B 179
B 59 Discontinued 1941; Specification for Aluminum-Bronze Sand Castings; Replaced by B 148
B 60 Discontinued 1944; Specification for Tin-Bronze and Leaded Tin-bronze Sand Castings; Replaced by B 143
B 61–93 Specification for Steam or Valve Bronze Castings, **02.01**
B 62–93 Specification for Composition Bronze or Ounce Metal Castings, **02.01**
B 63–90(1995)$^{\epsilon 1}$ Test Method for Resistivity of Metallically Conducting Resistance and Contact Materials, **03.04**
B 64 Discontinued 1952; Specification for Brazing Solder
B 65 Discontinued 1938; Specification for Lead Yellow Brass Sand Castings for General Purposes
B 66–95 Specification for Bronze Castings for Steam Locomotive Wearing Parts, **02.01**
B 67–93a Specification for Car and Tender Journal Bearings, Lined, **02.01**
B 68–95 Specification for Seamless Copper Tube, Bright Annealed, **02.01**
B 68M–95 Specification for Seamless Copper Tube, Bright Annealed [Metric], **02.01**
B 69–95a Specification for Rolled Zinc, **02.04**
B 70–90(1995)$^{\epsilon 1}$ Test Method for Change of Resistance With Temperature of Metallic Materials for Electrical Heating, **03.04**
B 71 Discontinued 1942; Methods of Testing Chemical Analysis of Nickel-Chromium and Nickel-Chromium-Iron Alloys
B 72 Discontinued 1977; Specification for Fire-Refined Casting Copper
B 73 Discontinued 1953; Specification for Silver Solders
B 74 Discontinued 1941; Specification for High-Leaded Tin-Bronze Sand Castings
B 75–97 Specification for Seamless Copper Tube, **02.01**
B 75M–97 Specification for Seamless Copper Tube [Metric], **02.01**
B 76–90(1995)$^{\epsilon 1}$ Test Method for Accelerated Life of Nickel-Chromium and Nickel-Chromium-Iron Alloys for Electrical Heating, **03.04**
B 77–81(1994)$^{\epsilon 1}$ Test Method for Thermoelectric Power of Electrical-Resistance Alloys, **03.04**
B 78–90(1995)$^{\epsilon 1}$ Test Method for Accelerated Life of Iron-Chromium-Aluminum Alloys for Electrical Heating, **03.04**
B 79 Discontinued 1946; Specification for Aluminum and Aluminum Alloy Sheet and Plate; Replaced by B 209
B 80–97 Specification for Magnesium-Alloy Sand Castings, **02.02**
B 81 Redesignated E 56
B 82 Discontinued 1959; Specification for Drawn or Rolled Alloy 80 Percent Nickel, 20 Percent Chromium, for Electrical-Heating Elements; Replaced by B 344
B 83 Discontinued 1959; Specification for Drawn or Rolled Alloy, 60 Percent Nickel, 16 Percent Chromium, and Balance Iron, for Electrical-Heating Elements; Replaced by B 344
B 84–90(1995)$^{\epsilon 1}$ Test Method for Temperature-Resistance Constants of Alloy Wires for Precision Resistors, **03.04**
B 85–96 Specification for Aluminum-Alloy Die Castings, **02.02**
B 86–97 Specification for Zinc-Alloy Die Castings, **02.04**
B 87 Discontinued 1938; Specification for Hard-Drawn Copper Transmission Cable; Replaced by B 8
B 88–96 Specification for Seamless Copper Water Tube,, **02.01**
B 88M–96 Specification for Seamless Copper Water Tube [Metric], **02.01**
B 89 Discontinued 1946; Specification for Aluminum and Aluminum-Alloy Bars, Rods, and Wire; Replaced by B 211
B 90/B90M–93 Specification for Magnesium-Alloy Sheet and Plate, **02.02**
B 91–97 Specification for Magnesium-Alloy Forgings, **02.02**
B 92M Discontinued 1990; Replaced by B 92/B 92M
B 92/B92M–89(1994)$^{\epsilon 1}$ Specification for Magnesium Ingot and Stick for Remelting, **02.02**
B 93M Discontinued 1990; Replaced by B 93/B 93M
B 93/B93M–94b Specification for Magnesium Alloys in Ingot Form for Sand Castings, Permanent Mold Castings, and Die Castings, **02.02**
B 94–94 Specification for Magnesium-Alloy Die Castings, **02.02**
B 95 Discontinued 1985; Method of Testing Linear Expansion of Metals; Replaced by E 228
B 96–93 Specification for Copper-Silicon Alloy Plate, Sheet, Strip, and Rolled Bar for General Purposes and Pressure Vessels, **02.01**
B 96M–93a Specification for Copper-Silicon Alloy Plate, Sheet, Strip, and Rolled Bar for General Purposes and Pressure Vessels [Metric], **02.01**
B 97 Discontinued 1982; Specification for Copper-Silicon Alloy Plate, Sheet, Strip, and Rolled Bar for General Purposes; Combined with B 96
B 98M Discontinued 1998; Replaced by B 98_B 98M
B 98/B98M–97 Specification for Copper-Silicon Alloy Rod, Bar, and Shapes, **02.01**
B 99M Discontinued 1996; Replaced by B 99/B 99M
B 99/B99M–96 Specification for Copper-Silicon Alloy Wire for General Applications, **02.01**

B 186 Discontinued 1946; Specification for Special Quality Zinc-Base Alloy Die Castings
B 187–97 Specification for Copper Bar, Bus Bar, Rod and Shapes, **02.01**
B 187M–97 Specification for Copper Bar, Bus Bar, Rod and Shapes [Metric], **02.01**
B 188–96 Specification for Seamless Copper Bus Pipe and Tube, **02.01**
B 189–95 Specification for Lead-Coated and Lead-Alloy-Coated Soft Copper Wire for Electrical Purposes, **02.03**
B 190 Discontinued 1961; Specification for Chromium-Nickel-Iron Alloy Castings (25-12 Class) for High-Temperature Service; Replaced by A 447
B 191 Discontinued 1956; Method of Testing Equivalent Yield Stress of Thermostat Metals; Replaced by B 305
B 192 Discontinued 1964; Method of Alternate Immersion Corrosion Testing of Non-Ferrous Metals
B 193–95 Test Method for Resistivity of Electrical Conductor Materials, **02.03**
B 194–96 Specification for Copper-Beryllium Alloy Plate, Sheet, Strip, and Rolled Bar, **02.01**
B 195 Discontinued 1952; Specification for Copper-Beryllium Alloy Plate, Sheet, Strip, and Rolled Bar; Combined with B 194
B 196–95a Specification for Copper-Beryllium Alloy Rod and Bar, **02.01**
B 196M–97 Specification for Copper-Beryllium Alloy Rod and Bar [Metric], **02.01**
B 197–93 Specification for Copper-Beryllium Alloy Wire, **02.01**
B 197M–93 Specification for Copper-Beryllium Alloy Wire [Metric], **02.01**
B 198 Discontinued 1973; Specification for Silicon Bronze and Silicon Brass Sand Castings; Replaced by B 584
B 199–87(1993)$^{\epsilon 1}$ Specification for Magnesium-Alloy Permanent Mold Castings, **02.02**
B 200–85(1993)$^{\epsilon 1}$ Specification for Electrodeposited Coatings of Lead and Lead-Tin Alloys on Steel and Ferrous Alloys, **02.05**
B 201–80(1995) Practice for Testing Chromate Coatings on Zinc and Cadmium Surfaces, **02.05**
B 202 Discontinued 1973; Specification for Metal Powder Sintered Bearings (Oil Impregnated); Replaced by B 438, B 439
B 203 Discontinued 1955; Method of Testing Strength of Welded Joints of Lead Wires for Electronic Devices and Lamps
B 204 Redesignated F 204
B 205 Redesignated F 205
B 206M Discontinued 1997; Replaced by B 206_B 206M
B 206/B206M–97 Specification for Copper-Nickel-Zinc Alloy (Nickel Silver) Wire and Copper-Nickel Alloy Wire, **02.01**
B 207 Redesignated A 448
B 208–96 Practice for Preparing Tension Test Specimens for Copper Alloy Sand, Permanent Mold, Centrifugal, and Continuous Castings, **02.01**
B 209–96 Specification for Aluminum and Aluminum-Alloy Sheet and Plate [Metric], **02.02**
B 209M–95 Specification for Aluminum and Aluminum-Alloy Sheet and Plate [Metric], **02.02**
B 210–95 Specification for Aluminum and Aluminum-Alloy Drawn Seamless Tubes, **02.02**
B 210M–95 Specification for Aluminum and Aluminum-Alloy Drawn Seamless Tubes [Metric], **02.02**
B 211–95a Specification for Aluminum and Aluminum-Alloy Bar, Rod, and Wire, **02.02**
B 211M–95a Specification for Aluminum and Aluminum-Alloy Bar, Rod, and Wire [Metric], **02.02**
B 212–89(1995)$^{\epsilon 1}$ Test Method for Apparent Density of Free-Flowing Metal Powders, **02.05**
B 213–90 Test Method for Flow Rate of Metal Powders, **02.05**
B 214–92 Test Method for Sieve Analysis of Granular Metal Powders, **02.05**
B 215–96 Practices for Sampling Finished Lots of Metal Powders, **02.05**
B 216–97 Specification for Tough-Pitch Fire-Refined Copper—Refinery Shapes, **02.01**
B 217 Discontinued 1965; Specification for Magnesium-Base Alloy Extruded Tubes; Combined with B 107
B 218 Redesignated F 218
B 219 Redesignated F 219
B 220 Discontinued 1955; Methods of Tension Testing Metallic Materials
B 221–96 Specification for Aluminum-Alloy Extruded Bars, Rods, Wire, Profiles, and Tubes, **02.02**
B 221M–96 Specification for Aluminum-Alloy Extruded Bars, Rods, Wire, Profiles, and Tubes [Metric], **02.02**
B 222 Discontinued 1989; Specification for Sintered Iron-Copper Structural Parts; Replaced by B 783
B 223–85(1991) Test Method for Modulus of Elasticity of Thermostat Metals (Cantilever Beam Method), **03.04**
B 224–96 Classification of Coppers, **02.01**
B 225 Discontinued 1969; Specification for Copper and Copper-Alloy Arc-Welding Electrodes
B 226–95 Specification for Cored, Annular, Concentric-Lay-Stranded Copper Conductors, **02.03**
B 227–88(1993)$^{\epsilon 1}$ Specification for Hard-Drawn Copper-Clad Steel Wire, **02.03**
B 228–93 Specification for Concentric-Lay-Stranded Copper-Clad Steel Conductors, **02.03**
B 229–95 Specification for Concentric-Lay-Stranded Copper and Copper-Clad Steel Composite Conductors, **02.03**
B 230–97 Specification for Aluminum 1350-H19 Wire for Electrical Purposes [Metric], **02.03**
B 230M–97 Specification for Aluminum 1350-H19 Wire for Electrical Purposes [Metric], **02.03**
B 231–95 Specification for Concentric-Lay-Stranded Aluminum 1350 Conductors [Metric], **02.03**
B 231M–95 Specification for Concentric-Lay-Stranded Aluminum 1350 Conductors [Metric], **02.03**
B 232–97 Specification for Concentric-Lay-Stranded Aluminum Conductors, Coated Steel-Reinforced (ACSR) [Metric], **02.03**
B 232M–97 Specification for Concentric-Lay-Stranded Aluminum Conductors, Coated Steel-Reinforced (ACSR) [Metric], **02.03**
B 233–97 Specification for Aluminum 1350 Drawing Stock for Electrical Purposes, **02.03**
B 234–95 Specification for Aluminum and Aluminum-Alloy Drawn Seamless Tubes for Condensers and Heat Exchangers, **02.02**
B 234M–95 Specification for Aluminum and Aluminum-Alloy Drawn Seamless Tubes for Condensers and Heat Exchangers [Metric], **02.02**
B 235 Discontinued 1963; Specification for Aluminum Alloy Extruded Tubes; Combined with B 221
B 236–95 Specification for Aluminum Bars for Electrical Purposes (Bus Bars), **02.02**
B 236M–95 Specification for Aluminum Bars for Electrical Purposes (Bus Bars) [Metric], **02.02**
B 237–96 Specification for Refined Antimony, **02.04**
B 238 Redesignated F 238
B 239 Redesignated F 239
B 240–95 Specification for Zinc Alloys in Ingot Form for Die Castings, **02.04**
B 241M Discontinued 1987; Replaced by B 241/B 241M
B 241/B241M–96 Specification for Aluminum and Aluminum-Alloy Seamless Pipe and Seamless Extruded Tube, **02.02**
B 242–54(1990) Practice for Preparation of High-Carbon Steel for Electroplating, **02.05**
B 243–96 Terminology of Powder Metallurgy, **02.05**
B 244–79(1993) Test Method for Measurement of Thickness of Anodic Coatings on Aluminum and of Other Nonconductive Coatings on Nonmagnetic Basis Metals with Eddy-Current Instruments, **02.05**
B 245 Discontinued 1969; Specification for Standard Weight Zinc-Coated (Galvanized) Steel Core Wire for Aluminum Conductors, Steel Reinforced (ACSR); Replaced by B 498
B 246–94 Specification for Tinned Hard-Drawn and Medium-Hard-Drawn Copper Wire for Electrical Purposes, **02.03**
B 247–95a Specification for Aluminum and Aluminum-Alloy Die Forgings, Hand Forgings, and Rolled Ring Forgings, **02.02**
B 247M–95a Specification for Aluminum and Aluminum-Alloy Die Forgings, Hand Forgings, and Rolled Ring Forgings [Metric], **02.02**
B 248–96 Specification for General Requirements for Wrought Copper and Copper-Alloy Plate, Sheet, Strip, and Rolled Bar, **02.01**
B 248M–96 Specification for General Requirements for Wrought Copper and Copper-Alloy Plate, Sheet, Strip, and Rolled Bar [Metric], **02.01**
B 249–94a Specification for General Requirements for Wrought Copper and Copper-Alloy Rod, Bar, Shapes and Forgings, **02.01**
B 249M–94a Specification for General Requirements for Wrought Copper and Copper-Alloy Rod, Bar, Shapes and Forgings [Metric], **02.01**
B 250–95 Specification for General Requirements for Wrought Copper-Alloy Wire, **02.01**
B 250M–95 Specification for General Requirements for Wrought Copper-Alloy Wire [Metric], **02.01**
B 251–97 Specification for General Requirements for Wrought Seamless Copper and Copper-Alloy Tube, **02.01**
B 251M–97 Specification for General Requirements for Wrought Seamless Copper and Copper-Alloy Tube [Metric], **02.01**
B 252–92 Guide for Preparation of Zinc Alloy Die Castings for Electroplating and Conversion Coatings, **02.05**
B 253–87(1993) Guide for Preparation of Aluminum Alloys for Electroplating, **02.05**
B 254–92 Practice for Preparation of and Electroplating on Stainless Steel, **02.05**
B 255–83a(1995)$^{\epsilon 1}$ Specification for Sintered Bronze Structural Parts, **02.05**
B 256 Redesignated F 256
B 257 Redesignated F 257
B 258–96 Specification for Standard Nominal Diameters and Cross-Sectional Areas of AWG Sizes of Solid Round Wires Used as Electrical Conductors, **02.03**
B 259 Discontinued 1969; Specification for Copper and Copper-Alloy Welding Rods
B 260 Discontinued 1969; Specification for Brazing Filler Metal
B 261 Discontinued 1969; Specification for Zinc-Coated (Galvanized) Steel Core Wire (with Coatings Heavier that Standard Weight) for Aluminum Conductors, Steel Reinforced (ACSR); Replaced by B 498
B 262 Discontinued 1978; Specification for Aluminum Wire, EC-H16 or -H26, for Electrical Purposes; Replaced by B 609
B 263–94 Test Method for Determination of Cross-Sectional Area of Stranded Conductors, **02.03**
B 264 Discontinued 1955; Specification for Titanium Ingot
B 265–95a Specification for Titanium and Titanium Alloy Strip, Sheet, and Plate, **02.04**
B 266 Discontinued 1955; Specification for Iodide Titanium
B 267–90(1995)$^{\epsilon 1}$ Specification for Wire for Use in Wire-Wound Resistors, **03.04**
B 268 Redesignated F 268
B 269 Redesignated F 269

Ovens for Electrical Insulation; Replaced by D 5374, D 5423
D 2437 Redesignated F 301
D 2438 Discontinued 1995; Test Method for Silica in Cellulose
D 2439–96 Specification for Refined Phenol, **06.04**
D 2440–97 Test Method for Oxidation Stability of Mineral Insulating Oil, **10.03**
D 2441–95 Test Method for Hydrolyzable Chlorine Compounds in Chlorinated Aromatic Hydrocarbons (Askarels) by Refluxing, **10.03**
D 2442–75(1996) Specification for Alumina Ceramics for Electrical and Electronic Applications, **15.02**
D 2443–95 Test Methods for Lacing Twines and Tapes Used as Harnesses in Electrical Equipment, **10.01**
D 2444–93 Test Method for Impact Resistance of Thermoplastic Pipe and Fittings by Means of a Tup (Falling Weight), **08.04**
D 2445 Discontinued 1987; Test Method for Thermal Oxidative Stability of Propylene Plastics; Replaced by D 3012
D 2446 Discontinued 1986; Specification for Cellulose Acetate Butyrate (CAB) Plastic Pipe (SDR-PR) and Tubing
D 2447–95 Specification for Polyethylene (PE) Plastic Pipe, Schedules 40 and 80, Based on Outside Diameter, **08.04**
D 2448–85(1996)$^{\epsilon 1}$ Test Method for Water-Soluble Salts in Pigments by Measuring the Specific Resistance of the Leachate of the Pigment, **06.03**
D 2449–88(1995)$^{\epsilon 1}$ Specification for Rubber Bales from Natural Sources—Limit on Coating, **09.01**
D 2450–87(1998) Test Method for Bond of Oil- and Resin-Base Caulking Compounds, **04.07**
D 2451–94 Test Method for Degree of Set for Glazing Compounds on Metal Sash, **04.07**
D 2452–94 Test Method for Extrudability of Oil- and Resin-Base Caulking Compounds, **04.07**
D 2453–94 Test Method for Shrinkage and Tenacity of Oil- and Resin-Base Caulking Compounds, **04.07**
D 2454–95 Practice for Determining the Effect of Overbaking on Organic Coatings, **06.01**
D 2455–89(1996)$^{\epsilon 1}$ Test Method for Identification of Carboxylic Acids in Alkyd Resins, **06.03**
D 2456–91(1997)$^{\epsilon 1}$ Test Method for Identification of Polyhydric Alcohols in Alkyd Resins, **06.03**
D 2457–97 Test Method for Specular Gloss of Plastic Films and Solid Plastics, **08.02**
D 2458 Discontinued 1982; Method for Flow Measurement of Industrial Water and Industrial Waste Water by the Venturi Meter Tube
D 2459 Discontinued 1987; Test Method for Gamma Spectrometry of Industrial Water and Industrial Waste Water
D 2460–97 Test Method for Radionuclides of Radium in Water, **11.02**
D 2461 Discontinued 1988; Test Method for Iron-59 in Water
D 2462–90(1995) Test Method for Moisture in Wool by Distillation with Toluene, **07.01**
D 2463–95 Test Method for Drop Impact Resistance of Blow-Molded Thermoplastic Containers, **08.02**
D 2464–96a Specification for Threaded Poly(Vinyl Chloride) (PVC) Plastic Pipe Fittings, Schedule 80, **08.04**
D 2465 Discontinued 1986; Specification for Threaded Acrylonitrile-Butadiene-Styrene (ABS) Plastic Pipe Fittings, Schedule 80
D 2467–96a Specification for Socket-Type Poly(Vinyl Chloride) (PVC) Plastic Pipe Fittings, Schedule 80, **08.04**
D 2468–96a Specification for Acrylonitrile-Butadiene-Styrene (ABS) Plastic Pipe Fittings, Schedule 40, **08.04**
D 2469 Discontinued 1986; Specification for Socket-Type Acrylonitrile-Butadiene-Styrene (ABS) Plastic Pipe Fittings, Schedule 80
D 2470 Discontinued 1989; Method of Measurement of Delayed Neutron-Emitting Fission Products in Nuclear Reactor Coolant Water During Reactor Operation
D 2471–94 Test Method for Gel Time and Peak Exothermic Temperature of Reacting Thermosetting Resins, **08.02**
D 2472–92(1997) Specification for Sulfur Hexafluoride, **10.03**
D 2473 Discontinued 1983; Specification for Polycarbonate Molding, Extrusion, and Casting Materials; Replaced by D 3935
D 2474–92 Specification for Vinyl Chloride Copolymer Resins, **08.02**
D 2475–88(1993)$^{\epsilon 1}$ Specification for Wool Felt, **07.01**
D 2476 Discontinued 1992; Test Method for Tritium in Water; Replaced by D 4107
D 2477–96 Test Method for Dielectric Breakdown Voltage and Dielectric Strength of Insulating Gases at Commercial Power Frequencies, **10.03**
D 2478 Discontinued 1978; Definitions of Terms Relating to Nails for Use with Wood and Wood-Base Materials; Replaced by F 547
D 2479 Discontinued 1969; Test Method for Length Distribution of Cotton Fibers by the Short Method Array
D 2480 Discontinued 1992; Test Method for Maturity Index and Linear Density of Cotton Fibers by the Causticaire Method
D 2481–81(1994)$^{\epsilon 1}$ Method for Accelerated Evaluation of Wood Preservatives for Marine Service by Means of Small-Size Specimens, **04.10**
D 2482–93(1997) Test Method for Surface Strength of Paper (Wax Pick Method), **15.09**
D 2483 Discontinued 1972; Test Method for Silicone Grit Content of Paper and Paper Products
D 2484–94 Specification for Polyester Film Pressure-Sensitive Electrical Insulating Tape, **10.01**
D 2485–91(1996) Test Methods for Evaluating Coatings for High Temperature Service, **06.01**
D 2486–96 Test Method for Scrub Resistance of Wall Paints, **06.02**
D 2487–93 Classification of Soils for Engineering Purposes (Unified Soil Classification System), **04.08**
D 2488–93 Practice for Description and Identification of Soils (Visual-Manual Procedure), **04.08**
D 2489–84(1994)$^{\epsilon 1}$ Test Method for Degree of Particle Coating of Bituminous-Aggregate Mixtures, **04.03**
D 2490 Discontinued 1976; Method of Test for Tumbler Test for Small Coke; Replaced by D 3402
D 2491 Discontinued 1981; Test Method for Staple Crimp in Grease Wool Locks
D 2492–90(1994) Test Method for Forms of Sulfur in Coal, **05.05**
D 2493–95a Viscosity-Temperature Chart for Asphalts, **04.03**
D 2494–96 Test Method for Commercial Mass of a Shipment of Yarn or Man-Made Staple Fiber or Tow, **07.01**
D 2495–87(1993)$^{\epsilon 1}$ Test Method for Moisture in Cotton by Oven-Drying, **07.01**
D 2496 Discontinued 1987; Test Method for Seed Coat Fragments and Funiculi in Cotton Fiber Samples
D 2497–95 Tolerances for Man-Made Organic-Base Filament Single Yarns, **07.01**
D 2498 Discontinued 1984; Test Method for Isomer Distribution of Straight-Chain Detergent Alkylate by Mass Spectrometry
D 2499 Redesignated F 316
D 2500–91 Test Method for Cloud Point of Petroleum Oils, **05.01**
D 2501–91(1995) Test Method for Calculation of Viscosity-Gravity Constant (VGC) of Petroleum Oils, **05.01**
D 2502–92(1996) Test Method for Estimation of Molecular Weight (Relative Molecular Mass) of Petroleum Oils from Viscosity Measurements, **05.01**
D 2503–92 Test Method for Relative Molecular Mass (Molecular Weight) of Hydrocarbons by Thermoelectric Measurement of Vapor Pressure, **05.01**
D 2504–88(1993)$^{\epsilon 1}$ Test Method for Noncondensable Gases in C_2 and Lighter Hydrocarbon Products by Gas Chromatography, **05.01**
D 2505–88(1993)$^{\epsilon 1}$ Test Method for Ethylene, Other Hydrocarbons, and Carbon Dioxide in High-Purity Ethylene by Gas Chromatography, **05.01**
D 2507–93 Terminology of Rheological Properties of Gelled Rocket Propellants, **15.03**
D 2508–93 Test Method for Solid Rocket Propellant Specific Impulse Measurements, **15.03**
D 2509–93 Test Method for Measurement of Load-Carrying Capacity of Lubricating Grease (Timken Method), **05.01**
D 2510–94 Test Method for Adhesion of Solid Film Lubricants, **05.01**
D 2511–93 Test Method for Thermal Shock Sensitivity of Solid Film Lubricants, **05.01**
D 2512–95 Test Method for Compatibility of Materials with Liquid Oxygen (Impact Sensitivity Threshold and Pass-Fail Techniques), **15.03**
D 2513–96a Specification for Thermoplastic Gas Pressure Pipe, Tubing, and Fittings, **08.04**
D 2514 Discontinued 1977; Tolerances for Fabrics Woven from All-Cotton or from Cotton Man-Made Fiber Blends
D 2515 Redesignated D 446
D 2516 Discontinued 1979; Recommended Practice for Nomenclature for Rubber-Grade Carbon Blacks; Replaced by D 1765
D 2517–94 Specification for Reinforced Epoxy Resin Gas Pressure Pipe and Fittings, **08.04**
D 2518–94 Specification for Woven Glass Fabrics for Electrical Insulation, **10.02**
D 2519–96 Test Method for Bond Strength of Electrical Insulating Varnishes by the Helical Coil Test, **10.02**
D 2520–95 Test Methods for Complex Permittivity (Dielectric Constant) of Solid Electrical Insulating Materials at Microwave Frequencies and Temperatures to 1650°C, **10.02**
D 2521–76(1997) Specification for Asphalt Used in Canal, Ditch, and Pond Lining, **04.04**
D 2522–95 Test Method for Chlorine Content of Polybutenes Used for Electrical Insulation, **10.03**
D 2523–78(1995)$^{\epsilon 1}$ Practice for Testing Load-Strain Properties of Roofing Membranes, **04.04**
D 2524–95 Test Method for Breaking Tenacity of Wool Fibers, Flat Bundle Method—⅛-in. (3.2-mm) Gage Length, **07.01**
D 2525–90(1995) Practice for Sampling Wool for Moisture, **07.01**
D 2526–97 Specification for Ozone-Resisting Silicone Rubber Insulation for Wire and Cable, **10.02**
D 2527–83(1997)$^{\epsilon 1}$ Specification for Rubber Seals—Splice Strength, **09.02**
D 2528 Discontinued 1975; Method of Test for Dirt in Casein and Isolated Soy Protein
D 2529 Discontinued 1985; Method of Test for Bursting Strength of Paperboard and Linerboard
D 2530 Discontinued 1989; Specification for Nonoriented Propylene Plastic Film
D 2531 Discontinued 1980; Specification for Phenoxy Plastics Molding and Extrusion Materials
D 2532–93 Test Method for Viscosity and Viscosity Change After Standing at Low Temperature of Aircraft Tubrine Lubricants, **05.01**
D 2533–96 Test Method for Vapor-Liquid Ratio of Spark-Ignition Engine Fuels, **05.01**

D 2829–97 Practice for Sampling and Analysis of Built-Up Roofs, **04.04**
D 2830–96 Test Method for Exterior Durability of Factory-Primed Wood Products, **06.02**
D 2831 Discontinued 1981; Method of Test for Evaluating the Ability of a Latex Paint to Resist Efflorescence from the Substrate
D 2832–92(1994) Guide for Determining Volatile and Nonvolatile Content of Paint and Related Coatings, **06.01**
D 2834–95 Test Method for Nonvolatile Matter (Total Solids) in Water-Emulsion Floor Polishes, Solvent-Based Floor Polishes, and Polymer-Emulsion Floor Polishes, **15.04**
D 2835–89(1993) Specification for Lubricant for Installation of Preformed Compression Seals in Concrete Pavements, **04.03**
D 2836 Discontinued 1977; Specification for Filled Poly(Vinyl Chloride)(PVC) Sewer Pipe
D 2837–92 Test Method for Obtaining Hydrostatic Design Basis for Thermoplastic Pipe Materials, **08.04**
D 2838–95 Test Method for Shrink Tension and Orientation Release Stress of Plastic Film and Thin Sheeting, **08.02**
D 2839–96 Practice for Use of a Melt Index Strand for Determining Density of Polyethylene, **08.02**
D 2840 Discontinued 1984; Method of Test for Average True Particle Density of Hollow Microspheres
D 2841–94 Practice for Sampling Hollow Microspheres, **08.02**
D 2842–97 Test Method for Water Absorption of Rigid Cellular Plastics, **08.02**
D 2843–93 Test Method for Density of Smoke from the Burning or Decomposition of Plastics, **08.02**
D 2844–94 Test Method for Resistance R-Value and Expansion Pressure of Compacted Soils, **04.08**
D 2845–95$^{\varepsilon 1}$ Test Method for Laboratory Determination of Pulse Velocities and Ultrasonic Elastic Constants of Rock, **04.08**
D 2846/D2846M–97 Specification for Chlorinated Poly(Vinyl Chloride) (CPVC) Plastic Hot- and Cold-Water Distribution Systems, **08.04**
D 2847–94 Practice for Testing Engine Coolants in Car and Light Truck Service, **15.05**
D 2848 Discontinued 1983; Specification for Reinforced Polycarbonate Injection Molding and Extrusion Materials; Replaced by D 3935
D 2849 Discontinued 1989; Method of Testing Urethane Foam Polyol Raw Materials
D 2850–95$^{\varepsilon 1}$ Test Method for Unconsolidated, Undrained Compressive Strength of Cohesive Soils in Triaxial Compression, **04.08**
D 2851–86(1993)$^{\varepsilon 1}$ Specification for Liquid Optical Adhesive, **15.06**
D 2852–95 Specification for Styrene-Rubber (SR) Plastic Drain Pipe and Fittings, **08.04**
D 2853 Discontinued 1989; Specification for Reinforced Olefin Injection Molding and Extrusion Materials
D 2854–96 Test Method for Apparent Density of Activated Carbon, **15.01**
D 2855–96 Practice for Making Solvent-Cemented Joints with Poly(Vinyl Chloride) (PVC) Pipe and Fittings, **08.04**
D 2856–94 Test Method for Open-Cell Content of Rigid Cellular Plastics by the Air Pycnometer, **08.02**
D 2857–95 Test Method for Dilute Solution Viscosity of Polymers, **08.02**
D 2858–70(1997)$^{\varepsilon 1}$ Test Method for Thermal Conductivity of Electrical Grade Magnesium Oxide, **10.02**
D 2859–96 Test Method for Flammability of Finished Textile Floor Covering Materials, **07.01**
D 2860/D2860M–90(1994)$^{\varepsilon 1}$ Test Method for Adhesion of Pressure-Sensitive Tape to Fiberboard at 90° Angle and Constant Stress, **15.09**
D 2861–87(1993)$^{\varepsilon 1}$ Test Methods for Flexible Composites of Copper Foil with Dielectric Film or Treated Fabrics, **10.02**
D 2862–92 Test Method for Particle Size Distribution of Granular Activated Carbon, **15.01**
D 2863–97 Test Method for Measuring the Minimum Oxygen Concentration to Support Candle-Like Combustion of Plastics (Oxygen Index), **08.02**
D 2864–94 Terminology Relating to Electrical Insulating Liquids and Gases, **10.03**
D 2865–95 Practice for Calibration of Standards and Equipment for Electrical Insulating Materials Testing, **10.02**
D 2866–94 Test Method for Total Ash Content of Activated Carbon, **15.01**
D 2867–95 Test Method for Moisture in Activated Carbon, **15.01**
D 2868–96 Test Method for Nitrogen Content (Kjeldahl) and Hide Substance Content of Leather, **15.04**
D 2869 Discontinued 1974; Method of Test for Black Heel Marking Tendencies of Waxes and Polymer Floor Finishes
D 2870–86(1990) Test Method for Gel Time of Tar Acids, **06.04**
D 2871 Discontinued 1984; Specification for p-tert-butylphenol 98
D 2872–97 Test Method for Effect of Heat and Air on a Moving Film of Asphalt (Rolling Thin-Film Oven Test), **04.03**
D 2873–94 Test Method for Interior Porosity of Poly(Vinyl Chloride) (PVC) Resins by Mercury Intrusion Porosimetry, **08.02**
D 2874 Discontinued 1982; Specification for Polyphenylene Oxide Molding and Extrusion Materials
D 2875–95 Test Method for Insoluble Ash of Vegetable-Tanned Leather, **15.04**
D 2876–97 Test Method for Water-Soluble Matter of Vegetable-Tanned Leather, **15.04**
D 2877 Discontinued 1975; Methods of Test for Measuring Frictional Properties of Slideway Lubricants
D 2878–95 Test Method for Estimating Apparent Vapor Pressures and Molecular Weights of Lubricating Oils, **05.02**
D 2879–97 Test Method for Vapor Pressure-Temperature Relationship and Initial Decomposition Temperature of Liquids by Isoteniscope, **05.02**
D 2880–96a Specification for Gas Turbine Fuel Oils, **05.02**
D 2881 Discontinued 1991; Classification of Metal Working Fluids and Related Materials
D 2882–90(1996)$^{\varepsilon 1}$ Test Method for Indicating the Wear Characteristics of Petroleum and Non-Petroleum Hydraulic Fluids in a Constant Volume Vane Pump, **05.02**
D 2883–95 Test Method for Reaction Threshold Temperature of Liquid and Solid Materials, **05.02**
D 2884–93 Test Method for Yield Stress of Heterogeneous Propellants by Cone Penetration Method, **05.02**
D 2886 Discontinued 1991; Test Method for Knock Characteristics of Motor Fuels by the Distribution Octane Number (DON) Method
D 2887–97a Test Method for Boiling Range Distribution of Petroleum Fractions by Gas Chromatography, **05.02**
D 2888 Discontinued 1982; Method for Analysis of Liquified Petroleum Gases (LPG) by Process Gas Chromatography
D 2889–95 Test Method for Calculation of True Vapor Pressures of Petroleum Distillate Fuels, **05.02**
D 2890–92(1996) Test Method for Calculation of Liquid Heat Capacity of Petroleum Distillate Fuels, **05.02**
D 2891 Discontinued 1981; Methods for Validation of Results of Process Distillation Analyzers; Replaced by D 3764
D 2892–95 Test Method for Distillation of Crude Petroleum (15-Theoretical Plate Column), **05.02**
D 2893–95 Test Method for Oxidation Characteristics of Extreme Pressure Lubricating Oils, **05.02**
D 2894 Discontinued 1979; Methods for Analysis of Calcium and Barium Petroleum Sulfonates by Liquid Chromatography; Replaced by D 3712
D 2895–88(1993)$^{\varepsilon 1}$ Test Method for Gloss Retention of Waxed Paper and Paperboard After Storage at 40°C (104°F), **05.02**
D 2896–96 Test Method for Base Number of Petroleum Products by Potentiometric Perchloric Acid Titration, **05.02**
D 2897 Discontinued 1984; Specification for Reinforced and Filled Nylon Injection Molding and Extrusion Materials; Replaced by D 4066
D 2898–94$^{\varepsilon 1}$ Methods for Accelerated Weathering of Fire-Retardant-Treated Wood for Fire Testing, **04.10**
D 2899–95 Method for Establishing Design Stresses for Round Timber Piles, **04.10**
D 2900–90(1997)$^{\varepsilon 1}$ Test Method for Accelerated Life Test of Electrical Grade Magnesium Oxide as Used in Sheathed-Type Electric Heating Elements, **10.02**
D 2901–93 Test Method for Cement Content of Freshly Mixed Soil-Cement, **04.08**
D 2902–95a Specification for Fluoropolymer Resin Heat-Shrinkable Tubing, **10.02**
D 2903–93 Specification for Crosslinked Chlorinated Polyolefin Heat-Shrinkable Tubing for Electrical Insulation, **10.02**
D 2904–97 Practice for Interlaboratory Testing of a Textile Test Method that Produces Normally Distributed Data, **07.01**
D 2905–97 Practice for Statements on Number of Specimens for Textiles, **07.01**
D 2906–97 Practice for Statements on Precision and Bias for Textiles, **07.01**
D 2907–97 Test Methods for Microquantities of Uranium in Water by Fluorometry, **11.02**
D 2908–91(1995) Practice for Measuring Volatile Organic Matter in Water by Aqueous-Injection Gas Chromatography, **11.02**
D 2909 Discontinued 1990; Test Method for Cyclohexylamine in Water; Replaced by D 4983
D 2910 Discontinued 1992; Practice for Concentration and Recovery of Organic Matter from Water by Activated Carbon
D 2911–94 Specification for Dimensions and Tolerances for Plastic Bottles, **08.02**
D 2912 Discontinued 1991; Test Method for Oxidant Content of the Atmosphere (Neutral KI)
D 2913–96 Test Method for Mercaptan Content of the Atmosphere, **11.03**
D 2914–95 Test Methods for Sulfur Dioxide Content of the Atmosphere (West-Gaeke Method), **11.03**
D 2915–94 Practice for Evaluating Allowable Properties for Grades of Structural Lumber, **04.10**
D 2916–88(1996) Specification for Isophorone, **06.04**
D 2917–91(1994) Specification for Methyl Isoamyl Ketone, **06.04**
D 2918–93 Practice for Durability Assessment of Adhesive Joints Stressed in Peel, **15.06**
D 2920 Discontinued 1977; Method for Determination of Silica in Titanium Dioxide Pigments; Replaced by D 1394
D 2921–88(1993)$^{\varepsilon 1}$ Test Method for Qualitative Tests for the Presence of Water Repellents and Preservatives in Wood Products, **06.02**
D 2922–96$^{\varepsilon 1}$ Test Methods for Density of Soil and Soil-Aggregate in Place by Nuclear Methods (Shallow Depth), **04.08**
D 2923–95 Test Method for Rigidity of Polyolefin Film and Sheeting, **08.02**
D 2924–93 Test Method for External Pressure Resistance of "Fiberglass" (Glass-Fiber-Reinforced Thermosetting-Resin) Pipe, **08.04**
D 2925–95 Test Method for Beam Deflection of "Fiberglass" (Glass-Fiber-Reinforced Thermosetting Resin) Pipe Under Full Bore Flow, **08.04**
D 2926 Discontinued 1989; Test Method for Bulk Modulus of Elasticity of Syntactic Foam (Piston-Cylinder Method)
D 2927 Discontinued 1974; Method of Test for Measurement of Tensile Creep and Creep Rupture of Reinforced Thermoplastics; Replaced by D 2990

D 3414–80(1990) Test Method for Comparison of Waterborne Petroleum Oils by Infrared Spectroscopy, **11.02**
D 3415–90 Practice for Identification of Waterborne Oils, **11.02**
D 3416 Discontinued 1993; Test Method for Total Hydrocarbons, Methane, and Carbon Monoxide (Gas Chromatographic Method)
D 3417–97 Test Method for Heats of Fusion and Crystallization of Polymers by Thermal Analysis, **08.02**
D 3418–97 Test Method for Transition Temperatures of Polymers by Thermal Analysis, **08.02**
D 3419–93 Practice for In-Line Screw-Injection Molding of Test Specimens from Thermosetting Compounds, **08.02**
D 3420–95 Test Method for Dynamic Ball Burst (Pendulum) Impact Resistance of Plastic Film, **08.02**
D 3421 Discontinued 1987; Recommended Practice for Extraction and Determination of Plasticizer Mixtures from Vinyl Chloride Plastics
D 3422 Discontinued 1985; Method of Test for Toluene Diisocyanate Concentrations in Workplace Atmospheres
D 3423–84(1990) Practice for Application of Emulsified Coal-Tar Pitch (Mineral Colloid Type), **04.04**
D 3424–92 Test Methods for Evaluating the Lightfastness and Weatherability of Printed Matter, **06.02**
D 3425 Discontinued 1993; Guide for Testing Solvent-Based Interior Semigloss Wall and Trim Enamels; Replaced by D 5146
D 3426–97 Test Method for Dielectric Breakdown Voltage and Dielectric Strength of Solid Electrical Insulating Materials Using Impulse Waves, **10.02**
D 3427–96 Test Method for Gas Bubble Separation Time of Petroleum Oils, **05.02**
D 3428 Discontinued 1990; Test Method for Torque Stability Wear and Brine Sensitivity Evaluation of Ball Joint Greases
D 3429–93 Test Method for Solubility of Fixed Gases in Low Boiling Liquids, **05.02**
D 3430–95 Test Method for Clarity and Yellowness of Liquid Water-Based Clear Floor Polishes, **15.04**
D 3431 Discontinued 1993; Test Method for Trace Nitrogen in Liquid Petroleum Hydrocarbons (Microcoulometric Method)
D 3432–89(1996)$^{\epsilon 1}$ Test Method for Unreacted Toluene Diisocyanates in Urethane Prepolymers and Coating Solutions by Gas Chromatography, **06.03**
D 3433–93 Test Method for Fracture Strength in Cleavage of Adhesives in Bonded Metal Joints, **15.06**
D 3434–96 Test Method for Multiple-Cycle Accelerated Aging Test (Automatic Boil Test) for Exterior Wet Use Wood Adhesives, **15.06**
D 3435 Discontinued 1989; Specification for Plastic Containers (Jerry Cans) for Petroleum Products
D 3436–96 Practice for Sampling and Handling Aniline, **06.04**
D 3437–95 Practice for Sampling and Handling Liquid Cyclic Products, **06.04**
D 3438–89(1995) Practice for Sampling and Handling Naphthalene, Maleic Anhydride, and Phthalic Anhydride, **06.04**
D 3439 Discontinued 1995; Test Methods for Assay of Alkaline Cresylate Solutions from Petroleum Sources
D 3440–82(1995) Guide for Preparing Specifications for Water-Emulsion Floor Polishes, **15.04**
D 3441–94 Test Method for Deep, Quasi-Static, Cone and Friction-Cone Penetration Tests of Soil, **04.08**
D 3442–91(1995)$^{\epsilon 1}$ Test Method for Gaseous Tritium Content of the Atmosphere, **11.03**
D 3443–91(1995)$^{\epsilon 1}$ Test Method for Chloride in Trichlorotrifluoroethane, **15.05**
D 3444–91(1995)$^{\epsilon 1}$ Test Method for Total Acid Number of Trichlorotrifluoroethane, **15.05**
D 3445 Discontinued 1991; Test Method for Nonvolatile Matter in Trichlorotrifluoroethane; Replaced by D 2109
D 3446 Discontinued 1993; Test Method for Water Content of Trichlorotrifluoroethane with Karl Fischer Reagent
D 3447–96 Test Method for Purity of Trichlorotrifluoroethane, **15.05**
D 3449 Discontinued 1990; Test Method for Sulfur Dioxide in Workplace Atmospheres (Barium Perchlorate Method)
D 3450–94 Test Method for Washability Properties of Interior Architectural Coatings, **06.02**
D 3451–92 Practices for Testing Polymeric Powders and Powder Coatings, **06.02**
D 3452–93 Practice for Rubber—Identification by Pyrolysis-Gas Chromatography, **09.01**
D 3453–96 Specification for Flexible Cellular Materials—Urethane for Furniture and Automotive Cushioning, Bedding, and Similar Applications, **08.02**
D 3454–97 Test Method for Radium-226 in Water, **11.02**
D 3455–95 Test Methods for Compatibility of Construction Materials with Electrical Insulating Oil of Petroleum Origin, **10.03**
D 3456–86(1996) Practice for Determining by Exterior Exposure Tests Susceptibility of Paint Films to Microbiological Attack, **06.01**
D 3457–87(1991)$^{\epsilon 1}$ Test Method for Preparation of Methyl Esters from Fatty Acids for Determination of Fatty Acid Composition by Gas-Liquid Chromatography, **06.03**
D 3458–96 Specification for Copies from Office Copying Machines for Permanent Records, **15.09**
D 3459–87(1993)$^{\epsilon 1}$ Test Method for Humid-Dry Cycling for Coatings on Wood and Wood Products, **06.02**
D 3460–96$^{\epsilon 1}$ Specification for White Watermarked and Unwatermarked Bond, Mimeo, Spirit Duplicator, Xerographic, and Laser Printer Cut-Sized Office Papers with Virgin, Recycled, or Recycled Fiber Content, **15.09**
D 3461–97 Test Method for Softening Point of Asphalt and Pitch (Mettler Cup-and-Ball Method), **05.02**
D 3462–97a Specification for Asphalt Shingles Made from Glass Felt and Surfaced with Mineral Granules, **04.04**
D 3463 Discontinued 1993; Practice for Compression Molding of Specimens of Rigid Acrylonitrile-Butadiene-Styrene (ABS) plastics; Replaced by D 4703
D 3464–96 Test Method for Average Velocity in a Duct Using a Thermal Anemometer, **11.03**
D 3465–75(1990) Practice for Purity of Monomeric Plasticizers by Gas Chromatography, **08.02**
D 3466–76(1993)$^{\epsilon 1}$ Test Method for Ignition Temperature of Granular Activated Carbon, **15.01**
D 3467–94 Test Method for Carbon Tetrachloride Activity of Activated Carbon, **15.01**
D 3468–90 Specification for Liquid-Applied Neoprene and Chlorosulfonated Polyethylene Used in Roofing and Waterproofing, **04.04**
D 3469–97 Test Methods for Measurement of Vertical Forces to Disengage Type IIA Lug-Style Child-Resistant Closures, **15.09**
D 3470–97 Test Method for Measurement of Removal Lug Strippage of Type IIA Child-Resistant Closures, **15.09**
D 3471 Discontinued 1994; Test Method for Top-Load-to-Engage Removal Lugs on Type Ia Child-Resistant Closures
D 3472–97 Test Method for Reverse-Ratchet Torque of Type IA Child-Resistant Closures, **15.09**
D 3473–88(1995) Test Methods for Lifting Force Required to Remove Certain Child-Resistant Snap Caps, **15.09**
D 3474–90(1997) Practice for The Calibration and Use of Torque Meters Used in Packaging Applications, **15.09**
D 3475–95 Classification of Child-Resistant Packages, **15.09**
D 3476 Discontinued 1991; Test Method for bis (Chloromethyl) Ether (bis CME) in Workplace Atmospheres (Gas Chromatography–Mass Spectrometry)
D 3477–95a Performance Specification for Men's and Boys' Woven Dress Shirt Fabrics, **07.02**
D 3478 Discontinued 1992; Test Method for Chlorinated Phenoxy Acid Herbicides in Water; Replaced by D 5317
D 3479/D3479M–96 Test Method for Tension-Tension Fatigue of Polymer Matrix Composite Materials, **15.03**
D 3480–88(1995) Test Methods for Downward Force Required to Open or Activate Child-Resistant Snap-Engagement Packages, **15.09**
D 3481–97 Test Method for Shelling Two-Piece Child-Resistant Closures That Are Activated by Two Simultaneous Dissimilar Motions, **15.09**
D 3482–90(1995) Test Method for Determining Electrolytic Corrosion of Copper by Adhesives, **15.06**
D 3483–83(1994)$^{\epsilon 1}$ Test Methods for Accumulated Deposition in a Steam Generator Tube, **11.02**
D 3484–97 Test Methods for Rubber—Evaluation of Oil-Extended Solution BR (Butadiene Rubber), **09.01**
D 3485–97 Specification for Smooth-Wall Collable Polyethylene (PE) Conduit (Duct) for Preassembled Wire and Cable, **10.02**
D 3486 Discontinued 1995; Practice for Installation of Vulcanizable Rubber Tank Linings and Pipe Linings
D 3487–88(1993) Specification for Mineral Insulating Oil Used in Electrical Apparatus, **10.03**
D 3488 Discontinued 1983; Recommended Practice for Rubber—Measuring the Precision of ASTM Test Methods
D 3489–96 Test Methods for Rubber— Microcellular Urethane, **08.02**
D 3490 Discontinued 1997; Specification for Flexible Cellular Materials—Bonded Urethane Foam
D 3491–92 Test Methods for Vulcanizable Rubber Tank and Pipe Lining, **09.02**
D 3492–97 Specification for Rubber Contraceptives (Male Condoms), **09.02**
D 3493–97a Test Method for Carbon Black—Dibutyl Phthalate Absorption Number of Compressed Sample, **09.01**
D 3494–76(1995) Specification for Water-Emulsion Floor Polish Remover, **15.04**
D 3495–83(1994)$^{\epsilon 1}$ Test Method for Hexane Extraction of Leather, **15.04**
D 3496–93 Test Method for Preparation of Bituminous Mixture Specimens for Dynamic Modulus Testing, **04.03**
D 3497–79(1995) Test Method for Dynamic Modulus of Asphalt Mixtures, **04.03**
D 3498–93 Specification for Adhesives for Field-Gluing Plywood to Lumber Framing for Floor Systems, **15.06**
D 3499–94 Test Method for Toughness of Wood-Based Structural Panels, **04.10**
D 3500–90(1995)$^{\epsilon 1}$ Test Method for Structural Panels in Tension, **04.10**
D 3501–94 Test Method for Testing Structural Panels in Compression, **04.10**
D 3502 Discontinued 1984; Test Method for Moisture Absorption of Compressed Wood Products
D 3503 Discontinued 1984; Test Method for Swelling and Recovery of Compressed Wood Products Due to Moisture Absorption
D 3504–96 Specification for Maleic Anhydride, **06.04**
D 3505–96 Test Method for Density or Relative Density of Pure Liquid Chemicals, **06.04**
D 3506 Discontinued 1993; Specification for Inhibited Grade Methylene Chloride for Preparing Pentachlorophenol Solutions
D 3507–97 Test Method for Penetration of Preservatives in Wood and for Differentiating Between Heartwood and Sapwood, **04.10**

Materials by Means of a Digital Magnetic Intensity Instrument, **08.04**
D 4167–91 Specification for Fiber-Reinforced Plastic Fans and Blowers, **08.04**
D 4168–95 Test Methods for Transmitted Shock Characteristics of Foam-in-Place Cushioning Materials, **15.09**
D 4169–96$^{\epsilon 1}$ Practice for Performance Testing of Shipping Containers and Systems, **15.09**
D 4170–97 Test Method for Fretting Wear Protection by Lubricating Grease, **05.02**
D 4171–97 Specification for Fuel System Icing Inhibitors, **05.02**
D 4172–94 Test Method for Wear Preventive Characteristics of Lubricating Fluid (Four-Ball Method), **05.02**
D 4173 Discontinued 1991; Practice for Evaluating Sheet Metal Forming Lubricant
D 4174–89(1994) Practice for Cleaning, Flushing, and Purification of Petroleum Fluid Hydraulic Systems, **05.02**
D 4175–96 Terminology Relating to Petroleum, Petroleum Products, and Lubricants, **05.02**
D 4176–93(1997) Test Method for Free Water and Particulate Contamination in Distillate Fuels (Visual Inspection Procedures), **05.02**
D 4177–95 Practice for Automatic Sampling of Petroleum and Petroleum Products, **05.02**
D 4178–82(1993) Practice for Calibrating Moisture Analyzers, **05.02**
D 4179–88(1994)$^{\epsilon 1}$ Test Method for Single Pellet Crush Strength of Formed Catalyst Shapes, **05.03**
D 4180–88(1994)$^{\epsilon 1}$ Test Method for Vibratory Packing Density of Formed Catalyst Particles and Catalyst Carriers, **05.03**
D 4181–97 Specification for Acetal (POM) Molding and Extrusion Materials, **08.02**
D 4182–97 Practice for Evaluation of Laboratories Using ASTM Procedures in the Sampling and Analysis of Coal and Coke, **05.05**
D 4183 Discontinued 1994; Test Methods for Total Recoverable Phosphorus and Organic Phosphorus in Sediments
D 4184 Discontinued 1987; Specification for Reinforced Thermosetting Resin (RTRP) Sewer Pipe—Replaced by D 3262
D 4185–96 Practice for Measurement of Metals in Workplace Atmosphere by Flame Atomic Absorption Spectrophotometry, **11.03**
D 4187 Discontinued 1992; Test Methods for Zeta Potential of Colloids in Water and Waste Water
D 4188–82(1994) Practice for Performing Pressure In-Line Coagulation-Flocculation-Filtration Test, **11.01**
D 4189–95 Test Method for Silt Density Index (SDI) of Water, **11.01**
D 4190–94a Test Method for Elements in Water by Direct-Current Argon Plasma Atomic Emission Spectroscopy, **11.01**
D 4191–93 Test Method for Sodium in Water by Atomic Absorption Spectrophotometry, **11.01**
D 4192–93 Test Method for Potassium in Water by Atomic Absorption Spectrophotometry, **11.01**
D 4193–95 Test Method for Thiocyanate in Water, **11.02**
D 4194–95 Test Methods for Operating Characteristics of Reverse Osmosis Devices, **11.02**
D 4195–88(1993) Guide for Water Analysis for Reverse Osmosis Application, **11.02**
D 4196–82(1993)$^{\epsilon 1}$ Test Method for Confirming the Sterility of Membrane Filters, **11.02**
D 4197 Discontinued 1994; Test Methods for Percent Porosity of Membrane Filters
D 4198–82(1993)$^{\epsilon 1}$ Methods for Evaluating Absorbent Pads Used with Membrane Filters for Bacteriological Analysis and Growth, **11.02**
D 4199–82(1993)$^{\epsilon 1}$ Test Methods for Autoclavability of Membrane Filters, **11.02**
D 4200–82(1993)$^{\epsilon 1}$ Test Method for Evaluating Inhibitory Effects of Ink Grids on Membrane Filters, **11.02**
D 4201–96 Test Method for Coliphages in Water, **11.02**
D 4202–92 Test Method for Thermal Stability of Poly(Vinyl Chloride) (PVC) Resin, **08.02**
D 4203–95 Specification for Styrene Acrylonitrile (SAN) Injection and Extrusion Materials, **08.02**
D 4204–95 Practice for Preparing Plastic Film Specimens for a Round-Robin Study, **08.02**
D 4205 Discontinued 1997; Guide for Flammability and Combustion Testing of Rubber and Rubber-Like Materials; Replaced by D 3814
D 4206–96 Test Method for Sustained Burning of Liquid Mixtures by the Setaflash Tester (Open Cup), **06.01**
D 4207–91 Test Method for Sustained Burning of Low-Viscosity Mixtures by the Wick Test, **06.01**
D 4208–88(1997) Test Method for Total Chlorine in Coal by the Oxygen Bomb Combustion/Ion Selective Electrode Method, **05.05**
D 4209–82(1996) Practice for Determining Volatile and Nonvolatile Content of Cellulosics, Emulsions, Resin Solutions, Shellac, and Varnishes, **06.01**
D 4210–89(1996)$^{\epsilon 1}$ Practice for Interlaboratory Quality Control Procedures and a Discussion on Reporting Low-Level Data, **11.01**
D 4211–82(1993) Classification for Fish Sampling, **11.05**
D 4212–93 Test Method for Viscosity by Dip-Type Viscosity Cups, **06.01**
D 4213–96$^{\epsilon 1}$ Test Method for Wet Abrasion Resistance of Interior Paints, **06.02**
D 4214–97 Test Methods for Evaluating Degree of Chalking of Exterior Paint Films, **06.01**
D 4215–96 Specification for Cold-Mixed, Cold-Laid Bituminous Paving Mixtures, **04.03**
D 4216–92 Specification for Rigid Poly(Vinyl Chloride) (PVC) and Related Plastic Building Products Compounds, **08.02**
D 4217–91(1995)$^{\epsilon 1}$ Test Method for Gel Time for Thermosetting Coating Powder, **06.02**
D 4218–96 Test Method for Carbon Black Content in Polyethylene Compounds by the Muffle-Furnace Technique, **08.02**
D 4219–93a Test Method for Unconfined Compressive Strength Index of Chemical-Grouted Soils, **04.08**
D 4220–95 Practices for Preserving and Transporting Soil Samples, **04.08**
D 4221–90 Test Method for Dispersive Characteristics of Clay Soil by Double Hydrometer, **04.08**
D 4222–91 Test Method for Determination of Nitrogen Adsorption and Desorption Isotherms of Catalysts by Static Volumetric Measurements, **05.03**
D 4223–96 Practice for Preparation of Test Specimens of Asphalt Stabilized Soils, **04.08**
D 4224 Discontinued 1995; Test Method for Anionic Detergent by Para-Toluidine Hydrochloride; Replaced by D 4251
D 4225–97 Specification for Styrene-Butadiene Sheeting, **08.02**
D 4226–95 Test Methods for Impact Resistance of Rigid Poly(Vinyl Chloride)(PVC) Building Products, **08.04**
D 4227–95 Practice for Qualification of Coating Applicators for Application of Coatings to Concrete Surfaces, **06.02**
D 4228–95 Practice for Qualification of Coating Applicators for Application of Coatings to Steel Surfaces, **06.02**
D 4229 Discontinued 1988; Method for Conducting Static Acute Toxicity Tests on Waste-Waters with Daphnia
D 4230–83(1996)$^{\epsilon 1}$ Test Method of Measuring Humidity With Cooled-Surface Condensation (Dew-Point) Hygrometer, **11.03**
D 4231 Discontinued 1998; Practice for Evaluation of Men's and Boys' Home Launderable Woven Dress Shirts and Sport Shirts
D 4232–95a Performance Specification for Men's and Women's Dress and Vocational Career Apparel Fabrics, **07.02**
D 4233–95 Performance Specification for Women's and Girls' Knitted and Woven Brassiere Fabrics, **07.02**
D 4234–95 Performance Specification for Women's and Girls' Knitted Robe, Negligee, Nightgown, Pajama, Slip, and Lingerie Fabrics, **07.02**
D 4235–95 Performance Specification for Women's and Girls' Knitted Blouse and Dress Fabrics, **07.02**
D 4236–94 Practice for Labeling Art Materials for Chronic Health Hazards, **06.02**
D 4237 Discontinued 1997; Test Methods for Rubber Hose Used for Steam Applications
D 4238 Test Method for Discontinued 1996; Test Method for Electrostatic Propensity of Textiles
D 4239–97 Test Method for Sulfur in the Analysis Sample of Coal and Coke Using High Temperature Tube Furnace Combustion Methods, **05.05**
D 4240 Discontinued 1995; Test Method for Airborne Asbestos Concentration in Workplace Atmosphere
D 4241–92 Practice for Design of Gas Turbine Generator Lubricating Oil Systems, **05.02**
D 4242–91(1995)$^{\epsilon 1}$ Test Method for Glass Plate Flow for Thermosetting Coating Powders, **06.02**
D 4243–86(1993)$^{\epsilon 1}$ Method for Measurement of Average Viscometric Degree of Polymerization of New and Aged Electrical Papers and Boards, **10.02**
D 4244–95 Specification for General-Purpose, Heavy-Duty, and Extra-Heavy Duty Acrylonitrile-Butadiene/Polyvinyl Chloride (NBR/PVC) Jackets for Wire and Cable, **10.02**
D 4245–97 Specification for Ozone-Resistant Thermoplastic Elastomer Insulation for Wire and Cable, 90°C Dry—75°C Wet Operation, **10.02**
D 4246–97 Specification for Ozone-Resistant Thermoplastic Elastomer Insulation for Wire and Cable, 90°C Operation, **10.02**
D 4247–95 Specification for General-Purpose Black Heavy-Duty and Black Extra-Heavy Duty Polychloroprene Jackets for Wire and Cable, **10.02**
D 4248–92 Practice for Design of Steam Turbine Generator Oil Systems, **05.02**
D 4249–83(1992)$^{\epsilon 1}$ Test Method for Enumeration of Candida Albicans in Water, **11.02**
D 4250–92(1995) Test Method for Water-Holding Capacity of Bibulous Fibrous Products, **15.09**
D 4251–89(1995)$^{\epsilon 1}$ Test Method for Active Matter in Anionic Surfactants by Potentiometric Titration, **15.04**
D 4252–89(1995)$^{\epsilon 1}$ Test Methods for Chemical Analysis of Alcohol Ethoxylates and Alkylphenol Ethoxylates, **15.04**
D 4253–91(1996) Test Methods for Maximum Index Density and Unit Weight of Soils Using a Vibratory Table, **04.08**
D 4254–91(1996) Test Method for Minimum Index Density and Unit Weight of Soils and Calculation of Relative Density, **04.08**
D 4255/D4255M–83(1994)$^{\epsilon 1}$ Guide for Testing In-Plane Shear Properties of Composite Laminates, **15.03**
D 4256 Discontinued 1995; Test Method for Determination of the Decontaminability of Coatings Used in Light-Water Nuclear Power Plants
D 4257 Discontinued 1990; Practice for Design and Use of Safety Alert System for Hazardous Work Locations in the Coatings and Lining Industry
D 4258–83(1992) Practice for Surface Cleaning Concrete for Coating, **06.02**
D 4259–88(1992) Practice for Abrading Concrete, **06.02**
D 4260–88(1992) Practice for Acid Etching Concrete, **06.02**
D 4261–83(1993)$^{\epsilon 1}$ Practice for Surface Cleaning Concrete Unit Masonry for Coating, **06.02**

Notched Specimens of Plastics, **08.03**
D 6111–97 Test Method for Bulk Density and Specific Gravity of Plastic Lumber and Shapes by Displacement, **08.03**
D 6112–97 Test Methods for Compressive and Flexural Creep and Creep-Rupture of Plastic Lumber and Shapes, **08.03**
D 6113–97 Test Method for Using a Cone Calorimeter to Determine Fire-Test-Response Characteristics of Insulating Materials Contained in Electrical or Opitical Fiber Cables, **10.02**
D 6114–97 Specification for Asphalt of Rubber Binder, **04.03**
D 6115–97 Test Method for Mode I Fatigue Delamination Growth Onset of Unidirectioinal Fiber-Reinforced Polymer Matrix Composites, **15.03**
D 6116–97 Test Method for Blocking, **15.04**
D 6117–97 Test Methods for Mechanical Fasteners in Plastic Lumber and Shapes, **08.03**
D 6119–97 Practice for Creating Surface Appearance Changes in Pile Yarn Floor Covering From Foot Traffic, **07.02**
D 6120–97 Test Method for Electrical Resistivity of Anode and Cathode Carbon Material at Room Temperature, **05.03**
D 6121–97 Test Method for Evaluation of the Load Carrying Capacity of Lubricants Under Conditions of Low Speed and High Torque Used for Final Hypoid Drive Axles, **05.03**
D 6122–97 Practice for Validation of Multivariate Process Infrared Spectrophotometers, **05.03**
D 6123/D6123M–97 Specification for Pressure-Sensitive Tape for Light Duty Packaging and General Purpose Masking, **15.09**
D 6124–97 Test Method for Residual Powder on Medical Gloves, **09.02**
D 6125–97 Test Method for Bending Resistance of Paper and Paperboard (Gurley Type Tester), **15.09**
D 6126–97 Specification for HFC-23 (Trifluoromethane, CHF3), **15.05**
D 6127–97 Practice for Handling, Transportation, and Storage of HFC-23 (Trifluoromethane, CHF3), **15.05**
D 6129–97 Test Method for Silicon in Engine Coolant Concentrates by Atomic Absorption Spectroscopy, **15.05**
D 6130–97 Test Method for Determination of Silicon and Other Elements in Engine Coolant by Inductively Coupled Plasma-Atomic Emission Spectroscopy, **15.05**
D 6131–97 Test Method for Evaluating the Relative Tint Undertone of Titanium Dioxide Pigments, **06.01**
D 6132–97 Test Method for Nondestructive Measurement of Dry Film Thickness of Applied Organic Coatings Over Concrete Using an Ultrasonic Gage, **06.01**
D 6133–97 Test Method for Acetone Content of Solvent-Reducible and Water-Reducible Paints, Coatings, Resins, and Raw Materials by Direct Injection Into a Gas Chromatograph, **06.01**
D 6134–97 Specification for Vulcanized Rubber Sheets Used in Waterproofing Systems, **04.04**
D 6135–97 Practice for Application of Self-Adhering Modified Bituminous Waterproofing, **04.04**
D 6136–97 Test Method for Kerosene Number of Unsaturated (Dry) Felt by the Vacuum Method, **04.04**
D 6137–97 Test Method for Sulfuric Acid Resistance of Polymer Linings for Flue Gas Desulfurization Systems, **06.02**
D 6138–97 Test Method for Determination of Corrosion Prevention Properties of Lubricating Greases Under Dynamic Wet Conditions (EMCOR Test), **05.03**
D 6139–97 Test Method for Determining the Aerobic Aquatic Biodegradation of Lubricants on Their Components Using the Gledhill Shake Flask, **05.03**
D 6140–97 Test Method for Determine Asphalt Retention of Paving Fabrics Used in Asphalt Paving for Full Width Applications, **04.09**
D 6141–97 Guide for Screening the Clay Portion of a Geosynthetic Clay Liner (GCL) for Chemical Compatibility to Liquids, **04.09**
D 6142–97 Test Method for Analysis of Phenol by Capillary Gas Chromatography, **06.04**
D 6143–97 Test Method for Iron Content of Bisphenol A (4,4′-Isopropylidenediphenol), **06.04**
D 6144–97 Test Method for Analysis of AMS (&-Methylstyreen) by Gas Chromatography, **06.04**
D 6145–97 Guide for Monitoring Sediment in Watersheds, **11.02**
D 6146–97 Guide for Monitoring Aqueous Nutrients in Watersheds, **11.02**
D 6147–97 Test Method for Vulcanized Rubber and Thermoplastic Elastomer - Determination of Force Decay (Stress Relaxation) in Compression, **09.01**
D 6148–97 Practice for the Examination of Stickies, **15.09**
D 6149–97 Specification for Newsprint Including Newsprint Manufactured from Recycled Fiber, **15.09**
D 6150–97 Test Method for Estimating Processing Losses of Plastisols and Organisols Due to Volatilit, **08.03**
D 6151–97 Practice for Using Hollow-Stem Augers for Geotechnical Exploration and Soil Sampling, **04.09**
D 6152–97 Specification for SEBS-Modified Mopping Asphalt Used in Roofing, **04.04**
D 6153–97 Specification for Materials for Bridge Deck Waterproofing Membrane Systems, **04.03**
D 6154–97 Specification for Chemically Modified Asphalt Cement for use in Pavement Construction, **04.03**
D 6155–97 Specification for Non Traditional Coarse Aggregates for Bituminous Paving Materials, **04.03**
D 6156–97 Practice for Use of Reversed-Phase High Performance Liquid Chromatographic Systems, **11.02**
D 6157–97 Practice for Determining the Performance of Oil/Water Separators Subjected to a Sudden Release, **11.02**
D 6158–97 Specification for Mineral Hydraulic Oils, **05.03**
D 6159–97 Test Method for Determination of Hydrocarbon Impurities in Ethylene by Gas Chromatography, **05.03**
D 6160–97 Standard Test Method for Determination of Polychlorinated Biphenyls (PCBs) in Waste Materials by Gas Chromatography, **05.03**
D 6161–97 Terminology Used in Crossflow Microfiltration, Ultrafiltration, Nanofiltration and Reverse Osmosis Membrane Processes, **11.02**
D 6162–97 Specification for Styrene Butadiene Styrene (SBS) Modified Bituminous Sheet Materials Using a Combination of Polyester and Glass Fiber Reinforcements, **04.04**
D 6163–97 Specification for Styrene Butadiene Styrene (SBS) Modified Bituminous Sheet Materials Using Glass Fiber Reinforcements, **04.04**
D 6164–97 Specification for Styrene Butadiene Styrene (SBS) Modified Bituminous Sheet Materials Using Polyester Reinforcements, **04.04**
D 6165–97 Standard Guide for the Comparison, Detection, and Identification of the Odors of Paints, Inks, and Related Materials, **06.01**
D 6166–97 Test Method for Color of Naval Stores and Related Products (Instrumental Determination of Gardner Color), **06.03**
D 6167–97 Guide for Conducting Borehole Geophysical Logging-Mechanical Caliper, **04.09**
D 6168–97 Guide for Selection of the Minimum Set of Data Elements Required to Identify Locations Chosen for the Field Collection of Information to Describe Soil, Rock, and Their Contained Fluids, **04.09**
D 6169–97 Guide for Selection of Soil and Rock Sampling Devices Used With Drill Rigs fpr Environmental Investigations, **04.09**
D 6170–97 Guide for Selecting a Ground-Water Modeling Code, **04.09**
D 6171–97 Guide for Documenting a Ground-Water Modeling Code, **04.09**
D 6172–98 Test Method for Determining the Volume of Bulk Materials Using Contours or Cross Sections Created by Direct Operator Compilation Using Photogrammetric Procedures, **05.05**
D 6173–97 Test Method for Determination of Various Anionic Surfactant Actives by Potentiometric Titration, **15.04**
D 6174–97 Test Method for Inorganic Sulfate in Surfactants by Potentiometric Lead Titration, **15.04**
D 6176M–97 Practice for Measuring Surface Atmospheric Temperature with Electrical Temperature Sensor [Metric], **11.03**
D 6177–97 Practice for Determining Emission Profiles of Volatile Organic Chemicals Emitted from Bedding Sets, **11.03**
D 6178–97 Practice for Estimation of Short-term Inhalation Exposure to Volatile Organic Chemicals Emitted from Bedding Sets, **11.03**
D 6179–97 Test Methods for Rough Handling of Unitized Loads and Large Shipping Cases and Crates, **15.09**
D 6180–97 Test Method for Stability of Insulating Oils of Petroleum Origin Under Electrical Discharge, **10.03**
D 6181–97 Test Method for Measurement of Turbidity in Mineral Insulating Oil of Petroleum Origin, **10.03**
D 6182–97 Test Method for Flexibility and Adhesion of Finish on Leather, **15.04**
D 6183–97 Test Method for Tackiness of Finish on Leather, **15.04**
D 6187–97 Practice for Cone Penetrometer Technology Characterization of Petroleum Contaminated Sites With Nitrogen Laser-Induced Fluorescence, **04.09**
D 6192–97 Table of Body Measurements for Girls Sizes 7 to 16, **07.02**
D 6193–97 Practice for Stitches and Seams, **07.02**
D 6194–97 Test Method for Glow-Wire Ignition of Materials, **10.02**
D 6195–97 Test Methods for Loop Tack, **15.06**
D 6196–97 Practice for Selection of Sorbents and Pumped Sampling/Thermal Desorption Analysis Procedures for Volatile Organic Compounds in Air, **11.03**
D 6198–97 Guide for Transport Packaging Design, **15.09**
D 6199–97 Practice for Quality of Wood Members of Containers and Pallets, **15.09**
D 6204–97 Test Method for Rubber-Measurement of Unvulcanized Rheological Properties Using Rotorless Shear Rheometers, **09.01**
D 6205–98 Calibration of the James Static Coefficient of Friction Machine, **15.04**
D 6207–97 Test Method for Dimensional Stability of Fabrics to Changes in Humidity and Temperature, **07.02**
D 6208–97 Test Method for Repassivation Potential of Aluminum and Its Alloys by Galvanostatic Measurement, **15.05**
D 6209–97 Test Method for Determination of Gaseous and Particulate Polycyclic Aromatic Hydrocarbons in Ambient Air (Collection on Sorbent-Backed Filters with Gas Chromatographic Mass Spectrometric Analysis), **11.03**
D 6210–98 Specification for Fully Formulated Ethylene Glycol Base Engine Coolant for Heavy Duty Engines, **15.05**
D 6211–98 Specification for Fully Formulated Propylene Glycol Base Engine Coolant for Heavy Duty Engines, **15.05**
D 6215–98a Guide for Removal of Oily Soils from Metal Surfaces, **15.04**
D 6216–98 Practice for Opacity Monitor Manufacturers to Certify Conformance with Design and Perfomance Specifications, **11.03**
D 6228–98 Test Method for Determination of Sulfur Compounds in Natural Gas and Gaseous Fuels by Gas Chromatography and Flame Photometric Detection, **05.05**
D 6231–98 Specification for HFC-125 (Pentafluoroethane, C2HF5), **15.05**
D 6232–98 Standard Guide for Selection of Sampling Equipment for Waste and Contaminated Media Data Collection Activities, **11.04**
D 6233–98 Standard Guide for Data Assessment for Environmental Waste Management Activities, **11.04**

E. MISCELLANEOUS SUBJECTS

E 1–95 Specification for ASTM Thermometers, **14.03**
E 2 Discontinued 1983; Methods of Preparation of Micrographs of Metals and Alloys (Including Recommended Practice for Photography As Applied to Metallography); Replaced by E 883
E 3–95 Methods of Preparation of Metallographic Specimens, **03.01**
E 4–98 Practices for Force Verification of Testing Machines, **03.01**
E 5 Discontinued 1937; Methods of Preparation of Metallographic Specimens; Replaced by E 3
E 6–98 Terminology Relating to Methods of Mechanical Testing, **03.01**
E 7–97a Terminology Relating to Metallography, **03.01**
E 8–98 Test Methods for Tension Testing of Metallic Materials, **03.01**
E 8M–98 Test Methods for Tension Testing of Metallic Materials [Metric], **03.01**
E 9–89a(1995) Test Methods of Compression Testing of Metallic Materials at Room Temperature, **03.01**
E 10–96 Test Method for Brinell Hardness of Metallic Materials, **03.01**
E 11–95 Specification for Wire-Cloth Sieves for Testing Purposes, **14.02**
E 12 Discontinued 1996; Terminology Relating to Density and Specific Gravity of Solids, Liquids, and Gases; Replaced by E 1547
E 13 Discontinued 1967; Definitions of Terms Relating to Screen (Sieve)
E 14 Discontinued 1983; Recommended Practice for Thermal Analysis of Metals and Alloys
E 15 Discontinued 1949; Methods of Radiographic Testing of Metal Castings
E 16 Discontinued 1978; Method of Free Bend Test for Ductility of Welds
E 17 Discontinued 1939; Specification for Sieves for Testing Purposes (Wire Cloth Sieves, Bound - Hole and Square - Hole Screens or Sieves)—Replaced by E 11
E 18–97a Test Methods for Rockwell Hardness and Rockwell Superficial Hardness of Metallic Materials, **03.01**
E 19 Discontinued 1962; Classification of Austenite Grain Size in Steels; Replaced by E 112
E 20 Discontinued 1994; Practice for Particle Size Analysis of Particulate Substances in the Range of 0.2 to 75 Micrometres by Optical Microscopy
E 21–92 Test Methods for Elevated Temperature Tension Tests of Metallic Materials, **03.01**
E 22 Discontinued 1959; Recommended Practice for Conducting Long-Time High-Temperature Tension Test of Metallic Materials; Replaced by E 139
E 23–96 Test Methods for Notched Bar Impact Testing of Metallic Materials, **03.01**
E 24 Discontinued 1968; Definitions of Terms Relating to Rheological Properties of Matter
E 25 Discontinued 1950; Method of Quantitative Spectrochemical Analysis of High Grade Pig Lead
E 26 Discontinued 1954; Method of Quantitative Spectrochemical Analysis of Zinc Base Alloy and High Grade Zinc by the Solution-d-c Arc Technique
E 27 Discontinued 1986; Method for Spectrographic Analysis of Zinc and Zinc Alloys by the Solution-Residue Technique
E 28–97 Test Method for Softening Point by Ring-and-Ball Apparatus, **06.03**
E 29–93a Practice for Using Significant Digits in Test Data to Determine Conformance with Specifications, **14.02**
E 30 Discontinued 1995; Test Methods for Chemical Analysis of Steel, Cast Iron, Open-Hearth Iron, and Wrought Iron
E 31 Discontinued 1995; Methods for Chemical Analysis of Ferroalloys
E 32–86(1996)$^{\epsilon 1}$ Practices for Sampling Ferroalloys and Steel Additives for Determination of Chemical Composition, **03.05**
E 33 Discontinued 1959; Hardness Conversion Table for Cartridge Brass (Relationship Between Diamond Pyramid Hardness, Rockwell Hardness, and Brinell Hardness); Replaced by E 140
E 34–94(1998) Test Methods for Chemical Analysis of Aluminum and Aluminum-Base Alloys, **03.05**
E 35–88(1997) Test Methods for Chemical Analysis of Magnesium and Magnesium Alloys, **03.05**
E 36 Discontinued 1980; Methods for Chemical Analysis of Brasses; Replaced by E 478
E 37–95 Test Methods for Chemical Analysis of Pig Lead, **03.05**
E 38 Discontinued 1989; Methods for Chemical Analysis of Nickel-Chromium and Nickel-Chromium-Iron Alloys; Replaced by E 353
E 39 Discontinued 1995; Methods for Chemical Analysis of Nickel
E 40 Discontinued 1993; Test Method for Chemical Analysis of Slab Zinc (Spelter); Replaced by E 536
E 41–92 Terminology Relating to Conditioning, **14.02**
E 42 Redesignated G 23
E 43 Discontinued 1962; Recommended Practice for Identification of Crystalline Materials by the Hanawalt X-Ray Diffraction Method
E 44 Redesignated A 919
E 45–97$^{\epsilon 1}$ Test Methods for Determining the Inclusion Content of Steel, **03.01**
E 46 Discontinued 1994; Test Methods for Chemical Analysis of Lead- and Tin-Base Solder
E 47 Discontinued 1997; Test Methods for Chemical Analysis of Zinc Die-Casting Alloys
E 48 Discontinued 1959; Hardness Conversion Table for Steel (Relationship Between Diamond Pyramid Hardness, Rockwell Hardness, and Brinell Hardness); Replaced by E 140
E 49 Discontinued 1950; Method of Spectrochemical Analysis of Lead Alloys for Minor Constituents and Impurities
E 50–90(1995)$^{\epsilon 1}$ Practices for Apparatus, Reagents, and Safety Precautions for Chemical Analysis of Metals, **03.05**
E 51 Discontinued 1984; Method for Spectrographic Analysis of Tin Alloys by the Powder Technique
E 52 Discontinued 1969; Industrial Radiographic Terminology for Use in Radiographic Inspection of Castings and Weldments
E 53–86a(1991) Methods for Chemical Analysis of Copper, **03.05**
E 54–80(1996) Test Methods for Chemical Analysis of Special Brasses and Bronzes, **03.05**
E 55–91(1996) Practice for Sampling Wrought Nonferrous Metals and Alloys for Determination of Chemical Composition, **03.05**
E 56 Discontinued 1994; Test Method for Chemical Analysis of Silver Brazing Alloys
E 57 Discontinued 1987; Methods for Chemical Analysis of White Metal Bearing Alloys
E 58 Discontinued 1951; Tentative Photometric Method for Determination of Bismuth in Pig Lead; Combined with E 37
E 59 Discontinued 1996; Practice for Sampling Steel and Iron for Determination of Chemical Composition; Replaced by E 1806
E 60–98 Practice for Analysis of Metals, Ores, and Related Materials by Molecular Absorption Spectrometry, **03.05**
E 61 Redesignated E 35
E 62–89(1996) Test Methods for Chemical Analysis of Copper and Copper Alloys (Photometric Methods), **03.05**
E 63 Discontinued 1951; Tentative Photometric Method for Chemical Analysis of Copper-Nickel and Copper-Nickel-Zinc Alloys; Combined with E 75
E 64 Discontinued 1957; Photometric Methods for Determination of Iron in Slab Zinc (Spelter); Combined with E 40
E 65 Discontinued 1951; Method of Sampling Slab Zinc (Spelter)
E 66 Discontinued 1948; Method for Sampling Molybdenum Salts and Compounds for Metallurgical Use; Combined with A 146
E 67 Discontinued 1951; Tentative Photometric Method for Chemical Analysis of Lead, Tin, Antimony and Their Alloys
E 68 Discontinued 1980; Method for Polarographic Determination of Lead and Cadmium in Zinc
E 69–95a Test Method for Combustible Properties of Treated Wood by the Fire-Tube Apparatus, **04.10**
E 71 Discontinued 1974; Reference Radiographs for Steel Castings up to 2 in. in Thickness; Replaced by E 446
E 72–98 Test Methods of Conducting Strength Tests of Panels for Building Construction, **04.11**
E 73–83(1996)$^{\epsilon 1}$ Practice for Static Load Testing of Truss Assemblies, **04.11**
E 74–95 Practice of Calibration of Force Measuring Instruments for Verifying the Load Indication of Testing Machines, **03.01**
E 75–76(1996) Test Methods for Chemical Analysis of Copper-Nickel and Copper-Nickel-Zinc Alloys, **03.05**
E 76–88(1993)$^{\epsilon 1}$ Test Methods for Chemical Analysis of Nickel-Copper Alloys, **03.05**
E 77–92 Test Method for the Inspection and Verification of Thermometers, **14.03**
E 78 Discontinued 1953; Method of Compression Testing of Metallic Materials; Combined with E 9
E 79 Discontinued 1964; Methods for Estimating the Average Grain Size of Wrought Copper and Copper-Base Alloys; Replaced by E 112
E 80 Discontinued 1986; Recommended Practice for Dilatometric Analysis of Metallic Materials; Replaced by E 228
E 81–96 Test Method for Preparing Quantitative Pole Figures of Metals, **03.01**
E 82–91(1996) Test Method for Determining the Orientation of a Metal Crystal, **03.01**
E 83–96 Practice for Verification and Classification of Extensometers, **03.01**
E 84–98 Test Method for Surface Burning Characteristics of Building Materials, **04.07**
E 85 Discontinued 1959; Recommended Practice for Conducting Time-for-Rupture-Tension Tests of Metallic Materials; Replaced by E 139
E 86 Discontinued 1983; Methods for Chemical Analysis of Antimony
E 87 Discontinued 1984; Methods for Chemical Analysis of Lead, Tin, Antimony and Their Alloys (Photometric Method)
E 88–91(1996) Practice for Sampling Nonferrous Metals and Alloys in Cast Form for Determination of Chemical Composition, **03.05**
E 89 Discontinued 1962; Methods for Estimating the Average Ferrite Grain Size of Low-Carbon Steels; Replaced by E 112
E 90–97 Test Method for Laboratory Measurement of Airborne Sound Transmission Loss of Building Partitions, **04.06**
E 91 Discontinued 1962; Method for Estimating the Average Grain Size of Non-Ferrous Metals, Other Than Copper, and Their Alloys; Replaced by E 112
E 92–82(1997)$^{\epsilon 1}$ Test Method for Vickers Hardness of Metallic Materials, **03.01**
E 93 Discontinued 1959; Hardness Conversion Table for Nickel and High Nickel Alloys (Relationship Between Diamond Pyramid Hardness, Brinell Hardness, and Rockwell Hardness; Replaced by E 140
E 94–93 Guide for Radiographic Testing, **03.03**
E 95–68(1996)$^{\epsilon 1}$ Specification for Cell-Type Oven with Controlled Rates of Ventilation, **14.02**
E 96–95 Test Methods for Water Vapor Transmission of Materials, **04.06**
E 97 Discontinued 1992; Test Method for Directional Reflectance Factor, 45-deg 0-deg, of Opaque Specimens by Broad-Band Filter Reflectometry; Replaced by E 1347
E 98 Discontinued 1965; Reference Radiographs for Inspection of Aluminum

F 1498–94 Specification for Taper Pipe Threads 60° for Thermoplastic Pipe and Fittings, **08.04**
F 1500–94 Test Method for Quantitating Non-UV-Absorbing Nonvolatile Extractables from Microwave Susceptors Utilizing Solvents as Food Simulants, **15.09**
F 1501–95 Test Method for Tension Testing of Calcium Phosphate Coatings, **13.01**
F 1502–94 Test Method for Static Measurements on Tires for Passenger Cars, Light Trucks, and Medium Duty Vehicles, **09.02**
F 1503–95 Practice for Machine/Process Potential Study Procedure, **15.08**
F 1504–97 Specification for Folded Poly(Vinyl Chloride)(PVC) Pipe for Existing Sewer and Conduit Rehabilitation, **08.04**
F 1505–94 Specification for Insulated and Insulating Hand Tools, **10.03**
F 1506–94$^{\epsilon 1}$ Performance Specification for Textile Materials for Wearing Apparel for Use by Electrical Workers Exposed to Momentary Electric Arc and Related Thermal Hazards, **10.03**
F 1507–94 Specification for Surge Suppressors for Shipboard Use, **01.07**
F 1508–96 Specification for Angle Style, Pressure Relief Valves for Steam, Gas, and Liquid Services, **01.07**
F 1509–94 Test Methods for Determining Acceptability of Ribbon Welds in Fabric Cartridges, **15.09**
F 1510–94 Specification for Rotary Positive Displacement Pumps, Commercial Ships Use, **01.07**
F 1511–96 Specification for Mechanical Seals for Shipboard Pump Applications, **01.07**
F 1512–94 Practice for Ultrasonic C-Scan Bond Evaluation of Sputtering Target-Backing Plate Assemblies, **10.04**
F 1513–94 Specification for Pure Aluminum (Unalloyed) Source Material for Electronic Thin Film Applications, **10.04**
F 1514–98 Test Method for Measuring Heat Stability of Resilient Vinyl Flooring by Color Change, **15.04**
F 1515–97 Test Method for Measuring Light Stability of Resilient Vinyl Flooring by Color Change, **15.04**
F 1516–94 Practice for Sealing Seams of Resilient Flooring Products by the Heat Weld Method (when Recommended), **15.04**
F 1517–94 Guide for the Scope of Performance of Emergency Medical Services Ambulance Operations, **13.01**
F 1518–94 Practice for Cleaning and Disinfection of Flexible Fiberoptic and Video Endoscopes Used in the Examination of the Hollow Viscera, **13.01**
F 1519–94 Test Method for Qualitative Analysis of Volatile Extractables in Microwave Susceptors Used to Heat Food Products, **15.09**
F 1520–94 Test Method for Determining the Drive Torque for Film and Fabric Ribbon Cartridges, **15.09**
F 1521–96 Test Methods for Performance of Range Tops, **15.07**
F 1522–95 Guide for the Use of the Steam Stripping Process in Mitigating Chemical Spills, **11.04**
F 1523–94 Guide for the Selection of Booms According to Water Body Classifications, **11.04**
F 1524–95 Guide for Use of Advanced Oxidation Process for the Mitigation of Chemical Spills, **11.04**
F 1525–96 Guide for Use of Membrane Technology in Mitigating Hazardous Chemical Spills, **11.04**
F 1527–94 Guide for Application of Silicon Standard Reference Materials and Reference Wafers for Calibration and Control of Instruments for Measuring Resistivity of Silicon, **10.05**
F 1528–94 Test Method for Measuring Boron Contamination in Heavily Doped N-Type Silicon Substrates by Secondary Ion Mass Spectrometry, **10.05**
F 1529–97 Test Method for Sheet Resistance Uniformity Evaluation by In-Line Four Point Probe with the Dual-Configuration Procedure, **10.05**
F 1530–94 Test Method for Measuring Flatness, Thickness and Thickness Variation on Silicon Wafers by Automated Noncontact Scanning, **10.05**
F 1531–94 Test Method for Comparing Printer or Copier Cartridges, **15.09**
F 1532–94 Guide for Qualification, Selection, Training, Utilization, and Supervision of Security Screening Personnel, **15.07**
F 1533–97 Specification for Deformed Polyethylene (PE) Liner, **08.04**
F 1534–96 Test Method for Determining Changes in Fire-Test-Response Characteristics of Cushioning Materials after Water Leaching, **15.07**
F 1535–94 Test Method for Carrier Recombination Lifetime in Silicon Wafers by Noncontact Measurement of Photoconductivity Decay by Microwave Reflectance, **10.05**
F 1536–95 Test Method for Determining Strength and Setting Time of Synthetic Water-Activated Polyurethane Fiberglass Orthopaedic Casting Tape, **13.01**
F 1537–94 Specification for Wrought Cobalt-28 Chromium-6 Molybdenum Alloy for Surgical Implants, **13.01**
F 1538–94 Specification for Glass and Glass Ceramic Biomaterials for Implantation, **13.01**
F 1539–95 Test Method for Constant Amplitude Bending Fatigue Tests of Metallic Bone Staples, **13.01**
F 1540–95 Test Method for Pull-Out Fixation Strength of Metallic Bone Staples, **13.01**
F 1541–94 Terminology and Classification of External Skeletal Fixators, **13.01**
F 1542–94 Specification for the Requirements and Disclosure of Self-Closing Aneurysm Clips, **13.01**
F 1543–96 Specification for Shock Attenuation Properties of Fencing Surfaces, **15.07**
F 1544–94 Specification for Determining the Rating Velocity of an Archery Bow, **15.07**
F 1545–96 Specification for Plastic-Lined Ferrous Metal Pipe, Fittings, and Flanges, **08.04**
F 1546/F1546M–96 Specification For Fire Hose Nozzles, **01.07**
F 1547–97 Guide Listing Relevant Standards and Publications for Commercial Shipbuilding, **01.07**
F 1548–94 Specification for Performance of Fittings for Use with Gasketed Mechanical Couplings Used in Piping Applications, **01.07**
F 1549–94 Terminology Relating to Underwater Search, and Rescue and Recovery Activities, **13.01**
F 1550–96a Test Method for Determination of Fire-Test-Response Characteristics of Components or Composites of Mattresses or Furniture for Use in Correctional Facilities After Exposure to Vandalism, by Employing a Bench Scale Oxygen Consumption Calorimeter, **15.07**
F 1551–94 Test Methods for Comprehensive Characterization of Synthetic Turf Playing Surfaces and Materials, **15.07**
F 1552–94 Practice for Training Instructor Qualification and Certification Eligibility of Emergency Medical Dispatchers, **13.01**
F 1553–96 Guide for Specifying Chain Link Fence, **01.06**
F 1554–94 Specification For Anchor Bolts, Steel, 36, 55, and 105-ksi Yield Strength, **15.08**
F 1555–94 Guide for Characteristics for Extremity Splints, **13.01**
F 1556–94 Guide for Spinal Immobilization and Extrication (Spine) Device Characteristics, **13.01**
F 1557–94 Guide for Full Body Spinal Immobilization Devices (FBSID) Characteristics, **13.01**
F 1558–94 Guide for Characteristics for Adjunct Cervical Spine Immobilization Devices (ACSID), **13.01**
F 1559–94 Guide for Characteristics for Cervical Spine Immobilization Collar(s) (CSIC), **13.01**
F 1560–94 Practice for Emergency Medical Dispatch Management, **13.01**
F 1561–96 Performance Requirements for Plastic Chairs for Outdoor Use, **15.07**
F 1562–95 Guide for Use-Oriented Foreign Language Instruction, **15.07**
F 1563–94 Specification for Tools to Squeeze-Off Polyethylene (PE) Gas Pipe or Tubing, **08.04**
F 1564–95 Specification for Structure-Mounted Insulating Work Platforms for Electrical Workers, **10.03**
F 1565–94 Specification for Pressure-Reducing Valves for Steam Service, **01.07**
F 1566–94 Test Methods for Evaluation of Innersprings and Boxsprings, **15.07**
F 1567–94 Specification for Fabricated or Cast Automatic Self-Cleaning, Fuel Oil and Lubricating Oil Strainers, **01.07**
F 1568–94 Specification for Food Processors, Electric, **15.07**
F 1569–94 Guide for Generation of Consensus Reference Materials for Semiconductor Technology, **10.05**
F 1570–94 Test Method for Determining the Tactile Ratio of a Membrane Switch, **10.05**
F 1571–95 Test Method for Determination of Abrasion and Smudge Resistance of Images Produced from Business Copy Products (Sutherland Method), **15.09**
F 1572–94$^{\epsilon 1}$ Test Methods for Tire Performance Testing on Snow and Ice Surfaces, **09.02**
F 1573–95 Specification for Anesthetic Equipment—Oropharyngeal and Nasopharyngeal Airways, **13.01**
F 1574–95 Test Method for Compressive Strength of Gaskets at Elevated Temperatures, **09.02**
F 1575–95 Test Method for Determining Bending Yield Moment of Nails, **15.08**
F 1576–95a Guide for Selection of Security Control Systems, Part II—Defining the Central Control System, **15.07**
F 1577–96 Test Methods for Detention Locks for Swinging Doors, **15.07**
F 1578–96 Practice for Contact Closure Cycling of a Membrane Switch, **10.05**
F 1579–95 Specification for Polyaryletherketone (PAEK) Resins for Surgical Implant Applications, **13.01**
F 1580–95 Specification for Titanium and Titanium-6 % Aluminum-4 % Vanadium Alloy Powders for Coatings of Surgical Implants, **13.01**
F 1581–95b Specification for Composition of Anorganic Bone for Surgical Implants, **13.01**
F 1582–98 Terminology Relating to Spinal Implants, **13.01**
F 1583–95 Practice for Communications Procedures—Phonetics, **13.01**
F 1584–95 Practice for Marking Buildngs During Disaster Search Operations, **13.01**
F 1585–95 Guides for Integrity Testing of Porous Barrier Medical Packages, **15.09**
F 1586–95 Specification for Wrought Nitrogen Strengthened-21 Chromium—10 Nickel—3 Manganese—2.5 Molybdenum Stainless Steel Bar for Surgical Implants, **13.01**
F 1587–97 Specification for Head and Face Protective Equipment for Ice Hockey Goaltenders, **15.07**
F 1588–96 Test Method for Constant Tensile Load Joint Test (CTLJT), **08.04**
F 1589–95 Test Method for Determination of the Critical Pressure for Rapid Crack Propagation in Plastic Pipe, **08.04**
F 1590–95 Specification for Tracheostomy Tube Connectors, **13.01**
F 1591–95 Practice for Visual Signals Between Persons on the Ground and in Aircraft During Ground Emergencies, **13.01**
F 1592–95a Test Method for Detention Hollow Metal Vision Systems, **15.07**
F 1593–97 Test Method for Trace Metallic Impurities in Electronic Grade

G 87–97 Practice for Conducting Moist SO_2 Tests, **03.02**
G 88–90 Guide for Designing Systems for Oxygen Service, **14.02**
G 89 Discontinued 1992; Methods for Cathodic Disbonding of Pipeline Coatings Subjected to Cyclic Temperatures
G 90–94 Practice for Performing Accelerated Outdoor Weathering of Nonmetallic Materials Using Concentrated Natural Sunlight, **14.02**
G 91–97 Practice for Monitoring Atmospheric SO_2 Using Sulfation Plate Technique, **03.02**
G 92–86(1997)$^{\epsilon 1}$ Practice for Characterization of Atmospheric Test Sites, **03.02**
G 93–96 Practice for Cleaning Methods for Material and Equipment Used in Oxygen-Enriched Environments, **14.02**
G 94–92 Guide for Evaluating Metals for Oxygen Service, **14.02**
G 95–87(1992)$^{\epsilon 1}$ Test Method for Cathodic Disbondment Test of Pipeline Coatings (Attached Cell Method), **06.02**
G 96–90(1996)$^{\epsilon 1}$ Guide for On-Line Monitoring of Corrosion in Plant Equipment (Electrical and Electrochemical Methods), **03.02**
G 97–97 Test Method for Laboratory Evaluation of Magnesium Sacrificial Anode Test Specimens for Underground Applications, **03.02**
G 98–91(1996)$^{\epsilon 1}$ Test Method for Galling Resistance of Materials, **03.02**
G 99–95a$^{\epsilon 1}$ Test Method for Wear Testing With a Pin-On-Disk Apparatus, **03.02**
G 100–89(1994)$^{\epsilon 1}$ Test Method for Conducting Cyclic Galvanostaircase Polarization, **03.02**
G 101–97 Guide for Estimating the Atmospheric Corrosion Resistance of Low-Alloy Steels, **03.02**
G 102–89(1994)$^{\epsilon 1}$ Practice for Calculation of Corrosion Rates and Related Information from Electrochemical Measurements, **03.02**
G 103–97 Test Method for Performing a Stress-Corrosion Cracking Test of Low Copper Containing Al-Zn-Mg Alloys in Boiling 6 % Sodium Chloride Solution, **03.02**
G 104–89(1993) Test Method for Assessing Galvanic Corrosion Caused by the Atmosphere, **03.02**
G 105–89(1997)$^{\epsilon 1}$ Test Method for Conducting Wet Sand/Rubber Wheel Abrasion Tests, **03.02**
G 106–89(1994)$^{\epsilon 1}$ Practice for Verification of Algorithm and Equipment for Electrochemical Impedance Measurements, **03.02**
G 107–95 Guide for Formats for Collection and Compilation of Corrosion Data for Metals for Computerized Database Input, **03.02**
G 108–94 Test Method for Electrochemical Reactivation (EPR) for Detecting Sensitization of AISI Type 304 and 304L Stainless Steels, **03.02**
G 109–92 Test Method for Determining the Effects of Chemical Admixtures on the Corrosion of Embedded Steel Reinforcement in Concrete Exposed to Chloride Environments, **03.02**
G 110–92(1997) Practice for Evaluating Intergranular Corrosion Resistance of Heat Treatable Aluminum Alloys by Immersion in Sodium Chloride + Hydrogen Peroxide Solution, **03.02**
G 111–97 Guide for Corrosion Tests in High Temperature or High Pressure Environment, or Both, **03.02**
G 112–92(1997) Guide for Conducting Exfoliation Corrosion Tests in Aluminum Alloys, **03.02**
G 113–94 Terminology Relating to Natural and Artificial Weathering Tests of Nonmetallic Materials, **14.02**
G 114–93 Practice for Aging Oxygen-Service Materials Prior to Flammability Testing, **14.02**
G 115–93$^{\epsilon 1}$ Guide for Measuring and Reporting Friction Coefficients, **03.02**
G 116–93 Practice for Conducting the Wire-on-Bolt Test for Atmospheric Galvanic Corrosion, **03.02**
G 117–93 Guide for Calculating and Reporting Measures of Precision Using Data from Interlaboratory Wear or Erosion Tests, **03.02**
G 118–96 Guide for Recommended format of Wear Test Data Suitable for Databases, **03.02**
G 119–93 Guide for Determining Synergism Between Wear And Corrosion, **03.02**
G 120–95 Practice for Determination of Soluble Residual Contamination in Materials and Components by Soxhlet Extraction, **14.02**
G 121–93 Practice for Preparation of Contaminated Test Coupons for the Evaluation of Cleaning Agents, **14.02**
G 122–96 Test Method for Evaluating the Effectiveness of Cleaning Agents, **14.02**
G 123–96 Test Method for Evaluating Stress-Corrosion Cracking of Stainless Alloys with Different Nickel Content in Boiling Acidified Sodium Chloride Solution, **03.02**
G 124–95 Test Method for Determining the Combustion Behavior of Metallic Materials in Oxygen-Enriched Atmospheres, **14.02**
G 125–95$^{\epsilon 1}$ Test Method for Measuring Liquid and Solid Material Fire Limits in Gaseous Oxidants, **14.02**
G 126–94 Terminology Relating to Compatibility and Sensitivity of Materials in Oxygen Enriched Environments, **14.02**
G 127–95 Guide for Selection of Cleaning Agents for Oxygen Systems, **14.02**
G 128–95 Guide for Control of Hazards and Risks in Oxygen Enriched Systems, **14.02**
G 129–95 Practice for Slow Strain Rate Testing to Evaluate the Susceptibility of Metallic Materials to Environmentally Assisted Cracking (EAC), **03.02**
G 130–95 Test Method for Calibration of Narrow and Broad Band Ultraviolet Radiometers Using a Spectroradiometer, **14.02**
G 131–96 Practice for Cleaning of Materials and Components by Ultrasonic Techniques, **14.02**
G 132–96 Test Method for Pin Abrasion Testing, **03.02**
G 133–95 Test Method for Linearly-Reciprocating Ball-On-Flat Sliding Wear, **03.02**
G 134–95 Test Method for Erosion of Solid Materials by a Cavitating Liquid Jet, **03.02**
G 135–95 Guide for Computerized Exchange of Corrosion Data for Metals, **03.02**
G 136–96 Practice for Determination of Soluble Residual Contaminants in Materials by Ultrasonic Extraction, **14.02**
G 137–97 Test Method for Ranking Resistance of Plastic Materials to Sliding Wear Using a Block-On-Ring Configuration, **03.02**
G 138–96 Test Method for Calibration of a Spectroradiometer Using a Standard Source of Irradiance, **14.02**
G 139–96 Test Method for Determining Stress-Corrosion Cracking Resistance of Heat-Treatable Aluminum Alloy Products Using the Breaking Load Method, **03.02**
G 140–96 Test Method for Determining Atmospheric Chloride Deposition Rate by Wet Candle Method, **03.02**
G 141–96 Guide for Addressing Variability in Exposure Testing on Nonmetallic Materials, **14.02**
G 142–96 Test Method for Determination of Susceptibility of Metals to Embrittlement in Hydrogen Containing Environments at High Pressure, High Temperature, or Both, **03.02**
G 143–96 Test Method for Measurement of Web/Roller Friction Characteristics, **03.02**
G 144–96 Test Method for Determination of Residual Contamination of Materials and Components by Total Carbon Analysis Using a High-Temperature Combustion Analyzer, **14.02**
G 145–96 Guide for Studying Fire Incidents in Oxygen Systems, **14.02**
G 146–96 Practice for Evaluation of Disbonding of Bimetallic Stainless Alloy/Steel Plate for Use in High-Pressure, High-Temperature Refinery Hydrogen Service, **03.02**
G 147–96 Practice for Conditioning and Handling of Nonmetallic Materials for Natural and Artificial Weathering Tests, **14.02**
G 148–97 Practice for Evaluation of Hydrogen Uptake, Permeation, and Transport in Metals by an Electrochemical Technique, **03.02**
G 149–97 Practice for Conducting the Washer Test for Atmospheric Galvanic Corrosion, **03.02**
G 150–97 Test Method for Electrochemical Critical Pitting Temperature Testing of Stainless Steels, **03.02**
G 151–97 Practice for Exposing Nonmetallic Materials in Accelerated Test Devices That Use Laboratory Light Sources, **14.02**
G 152–97 Practice for Operating Open Flame Carbon Arc Light Apparatus For Exposure of Nonmetllic Materials, **14.02**
G 153–97 Practice for Operating Enclosed Carbon Arc Light Apparatus for Exposure of Nonmetallic Materials, **14.02**
G 155–97 Practice for Operating Xenon Arc Light Apparatus for Exposure of Nonmetallic Materials, **14.02**
G 156–97 Practice for Selecting and Characterizing Weathering Reference Materials Used to Monitor Consistency of Conditions in an Exposure Test, **14.02**
G 158–98 Guide for Three Methods of Assessing Buried Steel Tanks

EXHIBIT 27

1999 Annual Book of ASTM Standards

Index

Alphanumeric List

ASTM Standards

Standards:

Specifications	2911
Test Methods	7403
Terminology	186
Total	10,500

Each ASTM standard has a unique serial designation. It is comprised of a capital letter indicating general classification (A, ferrous metals; B, nonferrous metals; C, cementitious, cermanic, concrete, and masonry materials; D, miscellaneous materials; E, miscellaneous subjects; F, materials for specific applications; G, corrosion, deterioration, and degradation of materials; ES, emergency standards; P, proposals; PS, provisional standards), a serial number (one to four digits), a dash, and the year of issue.

In each serial designation, the number following the dash indicates the year of original adoption as standard or, in the case of revision, the year of last revision. Thus, standards adopted or revised during the year 1999 have as their final number, 99. A letter following this number indicates more than one revision during that year, that is 99a indicates the second revision in 1999, 99b the third revision, etc. Standards that have been reapproved without change are indicated by the year of last reapproval in parentheses as part of the designation number, for example, (1999). A superscript epsilon indicates an editorial change since the last revision or reapproval; $\epsilon 1$ for the first change, $\epsilon 2$ for the second, etc.

If a standard is written in acceptable metric units and has a companion standard written in inch-pound units (or other units), the metric standard is identified by a letter M after the serial number; this standard contains "hard metric" units.

If a standard is written in inch-pound units (or other units) and acceptable metric units, the document is identified by a dual alphanumeric designation.

When reference is made to a standard, the *complete* designation should be given. Best practice is to state the *designation and title*.

The boldface number(s) following the title refer to the volume(s) of the *Annual Book of ASTM Standards* in which the standard appears.

This list includes only those standards which appear in the 1999 edition of each volume of the *Annual Book of ASTM Standards*. New and revised standards that were approved after the closing date for the volume are available as separate reprints and will be listed in next year's edition.

Each ASTM standard is available as a separate reprint from ASTM. Price and order information are available from ASTM Customer Service, 100 Barr Harbor Drive, West Conshohocken, PA 19428-2959, 610-832-9585.

A. FERROUS METALS

A 1–92 Specification for Carbon Steel Tee Rails, **01.04**

A 2–90(1997) Specification for Carbon Steel Girder Rails of Plain, Grooved, and Guard Types, **01.04**

A 3–87(1995) Specification for Steel Joint Bars, Low, Medium, and High Carbon (Non-Heat-Treated), **01.04**

A 4 Discontinued 1965; Specification for Medium-Carbon-Steel Splice Bars; Replaced by A 3

A 5 Discontinued 1979: Specification for High-Carbon Steel Joint Bars; Replaced by A 3

A 6/A6M–98 Specification for General Requirements for Rolled Structural Steel Bars, Plates, Shapes, and Sheet Piling, **01.04**

A 7 Discontinued 1967: Specification for Steel for Bridges and Building; Replaced by A 36 (for rolled shapes), A 283, A 306, A 663, A 675

A 8 Discontinued 1963; Specification for Structural Nickel Steel

A 9 Discontinued 1940; Specification for Steel for Buildings

A 10 Discontinued 1970; Specification for Mild Steel Plates; Replaced by A 283

A 11 Discontinued 1930; Specification for Structural Steel for Cars; Replaced by A 113

A 12 Discontinued 1934; Specification for Structural Steel for Ships; Replaced by A 131

A 13 Discontinued 1934; Specification for Rivet Steel for Ships; Replaced by A 131

A 14 Discontinued 1950; Specification for Carbon-Steel Bars for Springs; Replaced by A 68

A 15 Discontinued 1969: Specification for Billet-Steel Bars for Concrete Reinforcement; Replaced by A 615

A 16 Discontinued 1969: Specification for Rail-Steel Bars of Concrete Reinforcement; Replaced by A 616

A 17 Discontinued 1945: Specification for Carbon-Steel and Alloy-Steel Blooms, Billets and Slabs and Forms; Replaced by A 273 A 274

A 18 Discontinued 1940: Specification for Quenched-and-Tempered Carbon-Steel Axles, Shafts, and Other Forgings for Locomotives and Cars; Replaced by A 236

A 19 Discontinued—Replaced by A 236

A 20/A20M–97b Specification for General Requirements for Steel Plates for Pressure Vessels, **01.04**

A 21–94 Specification for Carbon Steel Axles, Non-Heat-Treated and Heat-Treated, for Railway Use, **01.04**

A 22 Discontinued 1934: Specification for Cold-Rolled Steel Axles; Replaced by A 57, A 504

A 23 Discontinued 1917: Specification for Forged and Rolled, or Rolled Solid Carbon-Steel Wheels for Engine-Truck, Tender, and Passenger Service; Replaced by A 57, A 504

A 24 Discontinued 1917: Specification for Forged and Rolled, or Rolled Solid Carbon-Steel Wheels for Freight-Car Service; Replaced by A 57, A 504

A 25 Discontinued 1993; Specification for Wrought Steel Wheels for Electric Railway Service; Replaced by A 504

A 26 Discontinued 1966: Specification for Steel Tires; Replaced by A 551

A 27/A27M–95 Specification for Steel Castings, Carbon, for General Application, **01.02**

A 28 Discontinued 1925: Specification for Lap-Welded and Seamless Steel Boiler Tubes for Locomotives; Replaced by A 83

A 29/A29M–93a Specification for Steel Bars, Carbon and Alloy, Hot-Wrought and Cold-Finished, General Requirements for, **01.05**

A 30 Discontinued 1964: Specification for Boiler and Firebox Steel for Locomotives

A 31–95 Specification for Steel Rivets and Bars for Rivets, Pressure Vessels, **15.08**

A 32 Discontinued 1927: Specification for Cold-Drawn Bessemer Steel Automotive Screw Stock; Replaced by A 107, A 108

A 33 Discontinued 1937: Methods of Chemical Analysis of Plain Carbon Steel; Replaced by E 30

A 34/A34M–96 Practice for Sampling and Procurement Testing of Magnetic Materials, **03.04**

A 35 Discontinued 1937: Recommended Practice for Annealing of Miscellaneous Rolled and Forged Carbon-Steel Objects

A 36/A36M–97a Specification for Carbon Structural Steel, **01.04**

A 37 Discontinued 1936: Recommended Practice for Carburizing and Heat-Treatment of Carburized Objects

A 38 Discontinued 1924: Specification for Drawn or Rolled Alloy, 60 Percent Nickel, 16 Percent Chromium, and Balance Iron; Replaced by A 83

A 39 Discontinued 1920: Specification for Staybolt Iron; Replaced by A 84

A 40 Discontinued 1920: Specification for Engine Bolt Iron; Replaced by A 84

A 41 Discontinued 1956: Specification for Refined Iron Bars

A 42 Discontinued 1972: Specification for Wrought Iron Plates

A 43 Discontinued 1992; Specification for Merchant Pig Iron

A 44 Discontinued 1955: Specification for Engine Bolt Iron Cast Iron Pit-Cast Pipe for Water Other Liquids; Replaced by A 377

A 45 Discontinued 1943: Specification for Cast-Iron Locomotive Cylinders

A 46 Discontinued 1943: Specification for Chilled-Tread Cast-Iron Wheels

A 47–90(1995) Specification for Ferritic Malleable Iron Castings, **01.02**

A 47M–90(1996) Specification for Ferritic Malleable Iron Castings [Metric], **01.02**

A 48–94a$^{\varepsilon 1}$ Specification For Gray Iron Castings [Metric], **01.02**

A 48M–94$^{\varepsilon 1}$ Specification For Gray Iron Castings [Metric], **01.02**

A 49–95 Specification for Heat-Treated Carbon Steel Joint Bars, Microalloyed Joint Bars, and Forged Carbon Steel Compromise Joint Bars, **01.04**

A 50 Discontinued 1937: Specification for Quenched Carbon-Steel Track Bolts; Replaced by A 183

A 51 Discontinued 1937: Specification for Quenched Alloy-Steel Track Bolts; Replaced by A 183

A 52 Discontinued 1925: Specification for Lap-Welded and Seamless Steel and Wrought-Iron Boiler Tubes for Stationary Service; Replaced by A 83

A 53/A53M–98 Specification for Pipe, Steel, Black and Hot-Dipped, Zinc-Coated, Welded and Seamless, **01.01**

A 54 Discontinued 1927: Specification for Cold-Drawn Open-Hearth Steel Automatic Screw Stock; Replaced by A 107, A 108

A 55 Discontinued 1937: Methods of Chemical Analysis of Alloy Steels; Replaced by E 30

A 56 Discontinued 1972: Specification for Wrought Iron Crane Chain

A 57 Discontinued 1966: Specification for Multiple-Wear Wrought Steel Wheels; Replaced by A 504

A 58 Discontinued 1943: Specification for Carbon-Steel Bars for Vehicle and General Purpose Springs; Replaced by A 689

A 59 Discontinued 1966: Specification for Silicon-Manganese Steel Bars for Springs; Replaced by A 689

A 60 Discontinued 1966: Specification for Chromium-Vanadium Steel Bars for Springs; Replaced by A 689, A/1552

A 61 Discontinued 1969: Specification for Deformed Rail Steel Bars for Concrete Reinforcement with 60,000 psi Minimum Yield Strength; Replaced by A 616

A 62 Discontinued 1949: Specification for Steel Elliptical Springs

A 63 Discontinued 1941: Specification for Alloy Steel Forgings for Locomotives and Cars; Replaced by A 237, A 238

A 64 Discontinued 1937: Methods for Chemical Analysis of Steel, Cast Iron, Open-Hearth Iron, and Wrought Iron; Replaced by E 30

A 65–87(1995) Specification for Steel Track Spikes, **01.04**

A 66–87(1995) Specification for Steel Screw Spikes, **01.04**

A 67–92 Specification for Steel Tie Plates, Low-Carbon and High-Carbon Hot-Worked, **01.04**

A 68 Discontinued 1975: Specification for Carbon Steel Bars for Springs; Replaced by A 689

A 69 Discontinued 1927: Specification for Elliptical Steel Springs for Automobiles

A 70 Discontinued 1947: Specification for Low and Intermediate Tensile Strength Carbon-Steel; Replaced by A 285

A 71 Discontinued 1937: Specification for Carbon Tool Steel

A 72 Discontinued 1972: Specification for Welded Wrought-Iron Pipe

A 73 Discontinued 1972: Specification for Wrought Iron Rolled or Forged Blooms and Forgings

A 74–98 Specification for Cast Iron Soil Pipe and Fittings, **01.02**

A 75 Discontinued 1921: Specification for Malleable Iron Castings; Replaced by A 47

A 76 Discontinued 1981: Specification for Low-Carbon Steel Track Bolts and Nuts; Replaced by A 183

A 77 Discontinued 1935: Specification for Electric Cast-Steel Stud-Link Anchor Chain

A 78 Discontinued 1947: Specification for Low Tensile Strength Carbon-Steel Plates of Structured Quality for Welding; Replaced by A 283

A 79 Discontinued 1921: Specification for Staybolt Wrought Iron Solid; Replaced by A 84

A 80 Discontinued 1927: Specification for Cold Finished Carbon-Steel Bars and Shafting; Replaced by A 107, A 108

A 81 Discontinued 1972: Specification for Wrought Iron

A 82–97a Specification for Steel Wire, Plain, for Concrete Reinforcement, **01.04**

A 83 Discontinued 1967: Specification for Seamless Carbon Steel Boiler Tubes; Replaced by A 192

A 84 Discontinued 1972: Specification for Staybolt Wrought Iron, Solid

A 85 Discontinued 1953: Specification for Common Iron Bars

A 86 Discontinued 1963: Specification for Staybolt Wrought Iron, Hollow-Rolled

A 87 Discontinued 1947: Specification for Mild to Medium-Strength Carbon-Steel Castings for General Application; Replaced by A 27

A 88 Discontinued 1933: Specification for High-Test Gray-Iron Castings; Replaced by A 48

A 89 Discontinued 1947: Specification for Low-Tensile Strength Steel Plates of Flange Carbon-Qualities and Firebox; Replaced by A 285

A 90/A90M–95a Test Method for Weight [Mass] of Coating on Iron and Steel Articles with Zinc or Zinc-Alloy Coatings, **01.06**

A 91 Discontinued 1940: Methods of Determining Weight of Casting on Tin, Terne, and Lead-Coated Sheets

A 92 Discontinued 1937: Specification for High-Speed Tool Steel

A 93 Discontinued 1965: Specification for Zinc-Coated Galvanized Iron or Steel Sheets, Bolts, and Butt Lengths; Replaced by A 525

A 94 Discontinued 1966: Specification for High Strength Structural steel

A 95 Discontinued 1957: Specification for Carbon-Steel Castings for Valves, Flanges, and Fittings for High-Temperature Service; Replaced by A 216

A 96 Discontinued 1965: Specification for Alloy-Steel Bolting Material for High-Temperature Service; Replaced by A 193

A 97 Discontinued 1935: Specification for Tungsten Powder

A 98 Discontinued 1992; Specification for Spiegeleisen

A 99–82(1992) Specification for Ferromanganese, **01.02**

A 100–93 Specification for Ferrosilicon, **01.02**

A 101–93$^{\varepsilon 1}$ Specification for Ferrochromium, **01.02**

Grouts, and Monolithic Surfacings, **04.05**

C 308–95 Test Methods for Working, Setting, and Service Strength Setting Times of Chemical-Resistant Resin Mortars, **04.05**

C 309–98a Specification for Liquid Membrane-Forming Compounds for Curing Concrete, **04.02**

C 310 Discontinued 1965; Method of Test for Resistance of Concrete Specimens to Slow Freezing in Air and Thawing in Water

C 311–98b Test Methods for Sampling and Testing Fly Ash or Natural Pozzolans for Use as a Mineral Admixture in Portland-Cement Concrete, **04.02**

C 312 Discontinued 1967; Recommended Practice for Clearance of Preformed Thermal Pipe Insulation; Replaced by C 585

C 313 Discontinued 1991; Test Method for Adherence of Porcelain Enamel and Ceramic Coatings to Sheet Metal

C 314 Discontinued 1981; Test Method for Flatness of Porcelain Enameled Panels

C 315–98b Specification for Clay Flue Linings, **04.05**

C 316 Discontinued 1986; Classification of Single- and Double-Screened Ground Refractory Materials

C 317–98 Specification for Gypsum Concrete, **04.01**

C 318/C318M–96 Specification for Gypsum Formboard, **04.01**

C 319 Discontinued 1963; Specification for 85 Percent Magnesia Block-Type Thermal Insulation; Replaced by C 489

C 320 Discontinued 1963; Specification for 85 Percent Magnesia Thermal Insulation; Replaced by C 489

C 321–94 Test Method for Bond Strength of Chemical-Resistant Mortars, **04.05**

C 322–82(1997)$^{\varepsilon 1}$ Practice for Sampling Ceramic Whiteware Clays, **15.02**

C 323–56(1995) Test Methods for Chemical Analysis of Ceramic Whiteware Clays, **15.02**

C 324–82(1992)$^{\varepsilon 1}$ Test Method for Free Moisture in Ceramic Whiteware Clays, **15.02**

C 325–81(1997)$^{\varepsilon 1}$ Test Method for Wet Sieve Analysis of Ceramic Whiteware Clays, **15.02**

C 326–82(1997)$^{\varepsilon 1}$ Test Method for Drying and Firing Shrinkages of Ceramic Whiteware Clays, **15.02**

C 327 Discontinued 1980; Method of Test for Linear Thermal Expansion of Fired Ceramic Whiteware Materials by the Interferometric Method; Replaced by C 539

C 328 Discontinued 1972; Test Methods for Modulus of Rupture of Fired, Dry-Pressed Ceramic Whiteware Specimens at Normal Temperature; Replaced by C 674

C 329–88(1994) Test Method for Specific Gravity of Fired Ceramic Whiteware Materials, **15.02**

C 330–99 Specification for Lightweight Aggregates for Structural Concrete, **04.02**

C 331–98b Specification for Lightweight Aggregates for Concrete Masonry Units, **04.02**

C 332–87(1998) Specification for Lightweight Aggregates for Insulating Concrete, **04.02**

C 333 Discontinued 1963; Specification for Diatomaceous Earth Thermal Block Insulation; Replaced by C 517

C 334 Discontinued 1963; Specification for Diatomaceous Earth Thermal Insulation for Pipes; Replaced by C 517

C 335–95 Test Method for Steady-State Heat Transfer Properties of Horizontal Pipe Insulation, **04.06**

C 336–71(1995)$^{\varepsilon 1}$ Test Method for Annealing Point and Strain Point of Glass by Fiber Elongation, **15.02**

C 337 Discontinued 1970; Method of Test for Average Linear Expansion of Glass; Replaced by E 228

C 338–93(1998) Test Method for Softening Point of Glass, **15.02**

C 339 Discontinued 1970; Specification for Cork Pipe Insulation for Low Temperature; Replaced by C 640

C 340 Discontinued 1970; Specification for Corkboard Thermal Insulation

C 341–96 Test Method for Length Change of Drilled or Sawed Specimens of Hydraulic-Cement Mortar and Concrete, **04.02**

C 342–97 Test Method for Potential Volume Change of Cement-Aggregate Combinations, **04.02**

C 343 Discontinued 1966; Specification for Cellular Glass Insulating Block; Replaced by C 552

C 344 Discontinued 1964; Specification for Calcium Silicate Thermal Block Insulation; Replaced by C 553

C 345 Discontinued 1964; Specification for Calcium Silicate Thermal Insulation for Pipes; Replaced by C 553

C 346–87(1998)$^{\varepsilon 1}$ Test Method for 45-deg Specular Gloss of Ceramic Materials, **02.05**

C 347 Discontinued 1991; Method of Test for Reflectivity and Coefficient of Scatter of White Porcelain Enamels

C 348–97 Test Method for Flexural Strength of Hydraulic Cement Mortars, **04.01**

C 349–97 Test Method for Compressive Strength of Hydraulic-Cement Mortars (Using Portions of Prisms Broken in Flexure), **04.01**

C 350 Discontinued 1969; Specification for Fly Ash for Use As an Admixture in Portland Cement Concrete; Replaced by C 618

C 351–92b(1999) Test Method for Mean Specific Heat of Thermal Insulation, **04.06**

C 352 Discontinued—Replaced by C 640

C 353–97 Test Method for Adhesion of Dried Thermal Insulating or Finishing Cement, **04.06**

C 354–97 Test Method for Compressive Strength of Thermal Insulating or Finishing Cement, **04.06**

C 355 Discontinued 1983; Test Methods for Water Vapor Transmission of Thick Materials; Replaced by E 96

C 356–87(1997) Test Method for Linear Shrinkage of Preformed High-Temperature Thermal Insulation Subjected to Soaking Heat, **04.06**

C 357–94(1998) Test Method for Bulk Density of Granular Refractory Materials, **15.01**

C 358 Discontinued 1968; Specification for Slag Cement; Replaced by C 595

C 359–99 Test Method for Early Stiffening of Portland Cement (Mortar Method), **04.01**

C 360 Discontinued 1999; Test Method for Ball Penetration in Freshly Mixed Hydraulic Cement Concrete

C 361–98 Specification for Reinforced Concrete Low-Head Pressure Pipe, **04.05**

C 361M–98 Specification for Reinforced Concrete Low-Head Pressure Pipe [Metric], **04.05**

C 362 Discontinued 1960; Specification for Reinforced Concrete Onternal Pressure Sewer Pipe

C 363–94 Test Method for Delamination Strength of Honeycomb Type Core Material, **15.03**

C 364–94 Test Method for Edgewise Compressive Strength of Flat Sandwich Constructions, **15.03**

C 365–94 Test Methods for Flatwise Compressive Strength of Sandwich Cores, **15.03**

C 366–94 Test Methods for Measurement of Thickness of Sandwich Cores, **15.03**

C 367–95 Test Methods for Strength Properties of Prefabricated Architectural Acoustical Tile or Lay-in Ceiling Panels, **04.06**

C 368–88(1994) Test Method for Impact Resistance of Ceramic Tableware, **15.02**

C 369 Discontinued 1972; Method of Test for Modulus of Rupture of Fired, Cast or Extruded Whiteware Products; Replaced by C 674

C 370–88(1994) Test Method for Moisture Expansion of Fired Whiteware Products, **15.02**

C 371–89(1994)$^{\varepsilon 1}$ Test Method for Wire-Cloth Sieve Analysis of Nonplastic Ceramic Powders, **15.02**

C 372–94 Test Method for Linear Thermal Expansion of Porcelain Enamel and Glaze Frits and Fired Ceramic Whiteware Products by the Dilatometer Method, **15.02**

C 373–88(1994) Test Method for Water Absorption, Bulk Density, Apparent Porosity, and Apparent Specific Gravity of Fired Whiteware Products, **15.02**

C 374–70(1998) Test Methods for Fusion Flow of Porcelain Enamel Frits (Flow-Button Methods), **02.05**

C 375–58(1993) Classification of Water Used in Milling of Porcelain Enamel, **02.05**

C 376 Discontinued 1974; Definition of Terms Relating to Magnesium Oxychloride and Magnesium Oxysulfate Cements

C 377 Discontinued 1983; Specification for Precast Reinforced Gypsum Slabs

C 378 Discontinued 1968; Specification for Mineral Fiber Block or Board Insulation for Low Temperature; Replaced by C 612

C 379 Discontinued 1967; Specification for Fly Ash for Use As a Pozzolanic Material With Lime; Replaced by C 593

C 380 Discontinued 1965; Specification for Annular Ringed Nails for Gypsum Wallboard; Replaced by C 514

C 381 Discontinued 1965; Specification for Cellular Glass Thermal Insulation for Pipes; Replaced by C 552

C 382 Discontinued 1965; Specification for Mineral Fiber Blanket and Felt Insulation (Industrial type) for Elevated Temperatures; Replaced by C 553

C 383–97 Test Method for Wet Adhesion of Thermal Insulating Cements to Metal, **04.06**

C 384–98 Test Method for Impedance and Absorption of Acoustical Materials by the Impedance Tube Method, **04.06**

C 385–58(1998) Test Method for Thermal Shock Resistance of Porcelain-Enameled Utensils, **02.05**

C 386–93(1998) Practice for Use of Chemical-Resistant Sulfur Mortar, **04.05**

C 387–99 Specification for Packaged, Dry, Combined Materials for Mortar and Concrete, **04.02**

C 388 Discontinued 1974; Method of Test for Yield of Magnesium Oxychloride Cement (Field Test)

C 389 Discontinued 1974; Method of Test for Yield of Magnesium Oxychloride Cement (Laboratory Test)

C 390–79(1995)$^{\varepsilon 1}$ Criteria for Sampling and Acceptance of Preformed Thermal Insulation Lots, **04.06**

C 391 Discontinued 1977; Specification for Amosite Asbestos Thermal Insulation for Pipes

C 392 Discontinued 1968; Specification for Mineral Fiber Block or Board Thermal Insulation for Elevated Temperatures; Replaced by C 612

C 393–94 Test Method for Flexural Properties of Flat Sandwich Constructions, **15.03**

C 394–94 Test Method for Shear Fatigue of Sandwich Core Materials, **15.03**

C 395–95 Specification for Chemical-Resistant Resin Mortars, **04.05**

C 396 Discontinued 1983; Method of Test for Compressive Strength of Chemically Setting Silicate and Silica Chemical-Resistant Mortars; Replaced by C 579

C 397–94 Practice for Use of Chemically Setting Chemical-Resistant Silicate and Silica Mortars, **04.05**

C 398–98 Practice for Use of Hydraulic Cement Mortars in Chemical-Resistant Masonry, **04.05**

D 308 Discontinued 1940; Method of Test for Oil Content of Petroleum Waxes; Replaced by D 721
D 309 Discontinued 1943; Specification for Crushed Stone, Crushed Slag, and Gravel for Bituminous Concrete Base and Surface Courses of Pavements; Replaced by D 692
D 310 Discontinued 1988; Test Method for Size of Anthracite; Replaced by D 4749
D 311 Discontinued 1988; Method for Sieve Analysis of Crushed Bituminous Coal; Replaced by D 4749
D 312–95a Specification for Asphalt Used in Roofing, **04.04**
D 313 Discontinued 1982; Method of Test for Coarse Particles in Mixtures of Asphalt and Mineral Matter
D 314 Discontinued 1970; Method of Test for Hardness of Rubber; Replaced by D 1415
D 315–95 Specification for Woven Asbestos Tape, **04.05**
D 316 Discontinued 1938; Methods of Test for Chafer Tire Fabrics Other Than Cord Fabrics
D 317 Discontinued 1956; Specification for Oil Putty for Glazing
D 318 Discontinued 1976; Specification for Amyl Acetate (Synthetic) (85 to 88% grade)
D 319–95 Specification for Amyl Alcohol (Synthetic), **06.04**
D 320 Discontinued 1953; Specification for Butyl Propionate (90 to 93% grade)
D 321 Discontinued 1953; Specification for Ethyl Lactate (Synthetic)
D 322–97 Test Method for Gasoline Diluent in Used Gasoline Engine Oils by Distillation, **05.01**
D 323–94 Test Method for Vapor Pressure of Petroleum Products (Reid Method), **05.01**
D 324 Discontinued 1964; Definitions of Terms Relating to Timber Preservatives
D 325 Discontinued 1945; Method of Test for Comparing Thermal Conductivities of Solid Electrical Insulating Materials
D 326 Discontinued 1935; Method of Compression Testing of Natural Building Stone
D 327 Redesignated C 99
D 328 Redesignated C 97
D 329–95 Specification for Acetone, **06.04**
D 330–93(1997) Specification for 2-Butoxyethanol, **06.04**
D 331–95 Specification for 2-Ethoxyethanol, **06.04**
D 332–87(1997)$^{\epsilon 1}$ Test Method for Relative Tinting Strength of White Pigments by Visual Observation, **06.01**
D 333–96 Test Methods for Clear and Pigmented Lacquers, **06.02**
D 334 Discontinued 1967; Methods of Test for Cotton Goods for Rubber and Pyroxylin Coating
D 335 Discontinued 1989; Specification for Cotton Tapes Woven for Electrical Purposes
D 336 Discontinued 1938; Methods of Test for Tire Fabrics Other Than Cord Fabrics
D 337 Redesignated E 337
D 338 Discontinued 1935; Method of Test for Modulus of Elasticity of Natural Building Stone
D 339 Discontinued 1935; Method of Shear Testing of Natural Building Stone
D 340 Discontinued 1935; Definitions of Terms Relating to Natural Building Stone
D 341–93(1998) Viscosity-Temperature Charts for Liquid Petroleum Products, **05.01**
D 342 Discontinued 1936; Specification for Acetate Ester of Ethylene Glycol Monoethyl Ether (90 to 91% Grade)
D 343 Discontinued 1982; Specification for 2-Ethoxyethyl Acetate (95% Grade)
D 344–97 Test Method for Relative Hiding Power of Paints by the Visual Evaluation of Brushouts, **06.01**
D 345–97 Test Method for Sampling and Testing Calcium Chloride for Roads and Structural Applications, **04.03**
D 346–90(1998) Practice for Collection and Preparation of Coke Samples for Laboratory Analysis, **05.05**
D 347–97 Tables for Volume and Specific Gravity Correction for Creosote, Creosote-Coal Tar Solutions, and Coal Tar, **04.10**
D 348–95 Test Methods for Rigid Tubes Used for Electrical Insulation, **10.01**
D 349–92(1997) Test Methods for Laminated Round Rods Used for Electrical Insulation, **10.01**
D 350–96 Test Methods for Flexible Treated Sleeving Used for Electrical Insulation, **10.01**
D 351–97 Classification for Natural Muscovite Block Mica and Thins Based on Visual Quality, **10.01**
D 352–97 Test Methods for Pasted Mica Used in Electrical Insulation, **10.01**
D 353 Discontinued 1995; Specification for Natural Rubber Insulation for Wire and Cable, 60°C Operation
D 354 Discontinued 1967; Methods of Testing Tolerances for Tubular Sleeving and Braids
D 355 Discontinued 1936; Method of Sampling Natural Building Stone and Sample for Testing
D 356 Discontinued 1935; Method of Tension Testing of Natural Building Stone and Sample for Testing
D 357 Discontinued 1970; Method of Test for Knock Characteristics of Motor Fuels Below 100 Octane Number by the Motor Method; Replaced by D 2700
D 358–98 Specification for Wood to Be Used as Panels in Weathering Tests of Coatings, **06.02**
D 359 Discontinued 1940; Specification for Shellac Varnish; Replaced by D 360
D 360–89(1996)$^{\epsilon 1}$ Specification for Shellac Varnishes, **06.03**
D 361 Discontinued 1968; Specification for Industrial 90 Benzene
D 362 Discontinued 1991; Specification for Industrial Grade Toluene
D 363–90(1995) Specification for Tricresyl Phosphate, **06.04**
D 364 Discontinued 1982; Specification for Industrial Grade Xylene
D 365–84(1996)$^{\epsilon 1}$ Test Methods for Soluble Nitrocellulose Base Solutions, **06.02**
D 366 Discontinued 1938; Specification for Concrete for Pavements
D 367–94 Test Method for Xylene-Insoluble Matter in Creosote, **04.10**
D 368–89(1995)$^{\epsilon 1}$ Test Method for Specific Gravity of Creosote and Oil-Type Preservatives, **04.10**
D 369–84(1995)$^{\epsilon 1}$ Test Method for Specific Gravity of Creosote Fractions and Residues, **04.10**
D 370–84(1995)$^{\epsilon 1}$ Test Method for Dehydration of Oil-Type Preservatives, **04.10**
D 371–89(1996) Specification for Asphalt Roll Roofing (Organic Felt) Surfaced with Mineral Granules; Wide Selvage, **04.04**
D 372–90(1995)$^{\epsilon 1}$ Specification for Flexible Treated Sleeving Used for Electrical Insulation, **10.01**
D 373 Discontinued 1994; Specification for Black and Yellow Straight-Cut and Bias-Cut Varnished Cotton Cloth and Tape for Electrical Insulation
D 374–94 Test Methods for Thickness of Solid Electrical Insulation, **10.01**
D 374M–94 Test Methods for Thickness of Solid Electrical Insulation [Metric], **10.01**
D 375–95 Specification for Asbestos Roving, **04.05**
D 376 Discontinued 1976; Methods of Test for Holland Cloth
D 377 Discontinued 1976; Methods of Test for Small Amounts of Copper and Manganese in Textiles
D 378–91 Test Methods for Rubber Belting, Flat Type, **09.02**
D 379 Discontinued 1938; Methods of Test for rubber hose; Replaced by D 380
D 380–94 Methods of Testing Rubber Hose, **09.02**
D 381–94$^{\epsilon 1}$ Test Method for Existent Gum in Fuels by Jet Evaporation, **05.01**
D 382 Discontinued 1940; Specification for Titanium Barium Pigment; Replaced by D 476
D 383 Discontinued 1940; Specification for Titanium Calcium Pigment; Replaced by D 476
D 384 Discontinued 1939; Specification for Titanium Dioxide; Replaced by D 476
D 385 Discontinued 1940; Specification for Zinc Sulfate Pigment; Replaced by D 477
D 386 Discontinued 1940; Specification for Zinc Oxide; Replaced by D 477
D 387–86(1994) Test Method for Color and Strength of Color Pigments with a Mechanical Muller, **06.01**
D 388–98a Classification of Coals by Rank, **05.05**
D 389 Discontinued 1963; Specification for Classification of Coals by Grade
D 390–92 Specification for Coal-Tar Creosote for the Preservative Treatment of Piles, Poles, and Timbers of Marine, Land, and Fresh Water Use, **04.10**
D 391–94 Specification for Creosote-Coal Tar Solution, **04.10**
D 392 Discontinued 1963; Methods of Testing Molding Powders Used in Manufacturing Molded Electrical Insulators
D 393 Discontinued 1938; Specification for Insulated Wire and Cable: Class A, 30% Heavy Rubber Compound
D 394 Discontinued 1970; Method of Test for Abrasion Resistance of Rubber Compounds
D 395–98 Test Methods for Rubber Property—Compression Set, **09.01**
D 396–98 Specification for Fuel Oils, **05.01**
D 397 Discontinued 1951; Specification for Emulsified Asphalt; Replaced by D 977
D 398 Discontinued 1950; Specification for Emulsified Asphalt; Replaced by D 977
D 399 Discontinued 1950; Specification for Emulsified Asphalt; Replaced by D 977
D 400 Discontinued 1937; Specification for Emulsified Asphalt (Heavy Premix-Winter Grade)
D 401 Discontinued 1949; Specification for Emulsified Asphalt; Replaced by D 977
D 402–97 Test Method for Distillation of Cut-Back Asphaltic (Bituminous) Products, **04.03**
D 403 Discontinued 1953; Methods of Testing and Tolerances for Yarns Containing Wool; Replaced by D 1285
D 404 Discontinued 1953; Methods of Testing and Tolerances for Yarns Containing Wool; Replaced by D 1285
D 405 Discontinued 1982; Specification for Blue Lead; Basic Sulfate
D 406 Discontinued 1961; Method of Test for Relative Dry Hiding Power of White Pigments in Linseed Oil Vehicle
D 407 Discontinued 1977; Definitions of Terms Relating to Gross Calorific Value and Net Calorific Value of Solid and Liquid Fuels; Replaced by D 121
D 408 Discontinued 1951; Method of Test for Grindability of Coal by the Ball-Mill Method
D 409–97 Test Method for Grindability of Coal by the Hardgrove-Machine Method, **05.05**
D 410 Discontinued 1988; Method for Sieve Analysis of Coal
D 411–98 Test Methods for Shellac Used for Electrical Insulation, **10.01**
D 412–98a Test Methods for Vulcanized Rubber and Thermoplastic Rubbers and Thermoplastic Elastomers—Tension, **09.01**
D 413–98 Test Methods for Rubber Property—Adhesion to Flexible Substrate, **09.01**

D 630 Discontinued 1981; Specification for Olive Oil Chip Soap (Type A, Straight; Type B, Blended)
D 631 Discontinued 1950; Specification for Emulsified Asphalt; Replaced by D 977
D 632–94 Specification for Sodium Chloride, **04.03**
D 633–97 Volume Correction Table for Road Tar, **04.03**
D 634 Discontinued 1963; Methods of Test for Product Uniformity of Phenolic Laminated Sheets
D 635–98 Test Method for Rate of Burning and/or Extent and Time of Burning of Self-Supporting Plastics in a Horizontal Position, **08.01**
D 636 Discontinued 1960; Method of Test for Diffusion of Light by Plastics
D 637 Discontinued 1995; Test Method for Surface Irregularities of Flat Transparent Plastic Sheets
D 638–98 Test Method for Tensile Properties of Plastics, **08.01**
D 639 Discontinued 1989; Methods of Testing Battery Containers Made from Hard Rubber or Equivalent Materials
D 640 Discontinued 1952; Specification and Methods of Test for Concentrated Ammonia Preserved Creamed and Centrifuged Natural Rubber Latex; Replaced by D 1076
D 641 Discontinued 1978; Method of Test for Conditioning Paperboard, Fiberboard, and Paperboard Containers for Testing; Replaced by D 685
D 642–94 Test Method for Determining Compressive Resistance of Shipping Containers, Components, and Unit Loads, **15.09**
D 643–97 Test Method for Folding Endurance of Paper by the Schopper Tester, **15.09**
D 644–94 Test Method for Moisture Content of Paper and Paperboard by Oven Drying, **15.09**
D 645/D645M–97 Test Method for Thickness of Paper and Paperboard, **15.09**
D 646–96 Test Method for Grammage of Paper and Paperboard (Weight Per Unit Area), **15.09**
D 647 Discontinued 1994; Practice for Design of Molds for Test Specimens of Plastic Molding Materials; Replaced by D 1896, D 3419, D 3641, D 4703, D 5227
D 648–98c Test Method for Deflection Temperature of Plastics Under Flexural Load, **08.01**
D 649 Discontinued—Replaced by D 695
D 650 Discontinued 1948; Tentative Method of Test for Flexural Strength of Electrical Insulating Materials; Replaced by D 790
D 651 Discontinued 1991; Test Method for Tensile Strength of Molded Electrical Insulating Materials
D 652 Discontinued 1957; Method of Test for Measuring Mica Stampings Used in Electronic Devices and Incandescent Lamps
D 653–97 Terminology Relating to Soil, Rock, and Contained Fluids, **04.08**
D 654 Discontinued 1958; Specification for Coal-Tar Pitch for Steep Built-Up Roofs
D 655 Discontinued 1971; Specification for Asphalt-Saturated and Coated Asbestos Felts for Use in Constructing Built-Up Roofs
D 656–87(1993) Specification for Pure Toluidine Red Toner, **06.03**
D 657 Discontinued 1979; Specification for Isopropyl Acetate
D 658 Discontinued 1996; Test Method for Abrasion Resistance of Organic Coatings by Air Blast Abrasive
D 659 Discontinued 1990; Method of Evaluating Degree of Chalking of Exterior Paints; Replaced by D 4214
D 660–93 Test Method for Evaluating Degree of Checking of Exterior Paints, **06.01**
D 661–93 Test Method for Evaluating Degree of Cracking of Exterior Paints, **06.01**
D 662–93 Test Method for Evaluating Degree of Erosion of Exterior Paints, **06.01**
D 663 Discontinued 1948; Tentative Method of Test for Acid and Base Value Numbers of Petroleum Oils by Color-Indictor Titration; Replaced by D 974
D 665–98 Test Method for Rust-Preventing Characteristics of Inhibited Mineral Oil in the Presence of Water, **05.01**
D 666 Discontinued 1964; Method for Conversion of Kinematic Viscosity to Saybolt Furol Viscosity; Replaced by D 2161
D 667 Discontinued 1963; Methods of Testing Steatite Used as Electrical Insulation; Combined with D 116
D 668–94 Test Methods for Measuring Dimensions of Rigid Rods and Tubes Used for Electrical Insulation, **10.01**
D 669–92(1997) Test Method for Dissipation Factor and Permittivity Parallel with Laminations of Laminated Sheet and Plate Materials, **10.01**
D 670 Discontinued 1954; Methods of Test for Sludge Formatting in Mineral Transformer Oil
D 671–93 Test Method for Flexural Fatigue of Plastics by Constant-Amplitude-of-Force, **08.01**
D 672 Discontinued 1951; Method of Test for Luminuous Reflectance, Transmittance, and Color of Materials
D 673 Discontinued 1998; Test Method for Mar Resistance of Plastics
D 674 Discontinued 1976; Recommended Practices for Long-Time Creep or Stress Relaxation of Plastics Under Tension or Compression at Different Temperatures; Replaced by D 2990
D 675 Discontinued 1961; Nomenclature of Descriptive Terms Pertaining to Plastics; Combined with D 883
D 676 Discontinued 1965; Method of Test for Indentation of Rubber by Means of a Durometer; Replaced by D 2240
D 677 Discontinued 1958; Specification for Woven Asbestos Cloth; Replaced by D 1571
D 678 Discontinued 1947; Tentative Specifications for Finished, All-Cotton, Upholstery Tapestries
D 679 Discontinued 1966; Methods of Testing and Tolerances for Certain Fine Staple Cotton Gray Goods
D 680 Discontinued 1966; Methods of Testing and Tolerances for Certain All-Cotton and Rayon Fine Fancy Goods
D 681–87(1993)$^{\epsilon 1}$ Specification for Jute Rove and Plied Yarn for Electrical and Packing Purposes, **07.01**
D 682 Discontinued 1958; Method of Test for Colorfastness of Dyed Acetate to Atmospheric Fumes
D 683 Discontinued 1961; Methods of Test for Identification of Finishes on Textiles
D 684 Discontinued 1958; Methods of Test for Resistance of Textile Materials to Microorganisms
D 685–93(1998) Practice for Conditioning Paper and Paper Products for Testing, **15.09**
D 686–93(1997) Test Methods of Qualitative Examination of Mineral Filler and Mineral Coating of Paper, **15.09**
D 687 Discontinued 1973; Method for Quantitative Determination of Coating on Mineral-Coated Paper
D 688 Discontinued 1967; Method of Test for Pentosans in Paper
D 689–96a Test Method for Internal Tearing Resistance of Paper, **15.09**
D 690 Discontinued 1981; Specification for Compound Chip Soap (with Rosin)
D 691 Discontinued 1981; Specification for Compound Powdered Soap (Granulated, with Rosin)
D 692–94a Specification for Coarse Aggregate for Bituminous Paving Mixtures, **04.03**
D 693–84(1993)$^{\epsilon 1}$ Specification for Crushed Aggregate for Macadam Pavements, **04.03**
D 694 Discontinued 1977; Specification for Crushed Stone, Crushed Slag, and Crushed Gravel for Water-Bound Macadam Base Courses; Replaced by D 693
D 695–96 Test Method for Compressive Properties of Rigid Plastics, **08.01**
D 696–98 Test Method for Coefficient of Linear Thermal Expansion of Plastics Between -30C and 30C, **08.01**
D 697 Discontinued 1954; Method of Test for Water Vapor Permeability of Plastic Sheets; Replaced by E 96
D 698–91(1998) Test Method for Laboratory Compaction Characteristics of Soil Using Standard Effort (12,400 ft·lbf/ft^3 (600 kN·m/m^3)), **04.08**
D 699 Discontinued 1978; Specification for Asphalt Sliding Organic Felt Surfaced with Mineral Granules
D 700 Discontinued 1991; Specification for Phenolic Molding Compounds
D 701 Discontinued 1982; Specification for Cellulose Nitrate (Pyroxylin) Plastic Sheets, Rods, and Tubes
D 702 Discontinued 1990; Specification for Cast Methacrylate Plastic Sheets
D 703 Discontinued 1987; Specification for Polystyrene Molding Compounds; Replaced by D 4549
D 704–94 Specification for Melamine-Formaldehyde Molding Compounds, **08.01**
D 705–94 Specification for Urea-Formaldehyde Molding Compounds, **08.01**
D 706–98 Specification for Cellulose Acetate Molding and Extrusion Compounds, **08.01**
D 707–98 Specification for Cellulose Acetate Butyrate Molding and Extrusion Compounds, **08.01**
D 708 Discontinued 1963; Specification for Vinyl Chloride Polymer and Copolymer Rigid Sheets
D 709–92(1997) Specification for Laminated Thermosetting Materials, **10.01**
D 710–97 Specification for Vulcanized Fibre Sheets, Rods, and Tubes Used for Electrical Insulation, **10.01**
D 711–89(1994)$^{\epsilon 1}$ Test Method for No-Pick-Up Time of Traffic Paint, **06.02**
D 712 Discontinued 1958; Method of Test for Light Sensitivity of Traffic Paint
D 713–90(1995)$^{\epsilon 1}$ Practice for Conducting Road Service Tests on Fluid Traffic Marking Materials, **06.02**
D 714–87(1994)$^{\epsilon 1}$ Test Method for Evaluating Degree of Blistering of Paints, **06.01**
D 715–86(1991)$^{\epsilon 1}$ Test Methods for Analysis of Barium Sulfate Pigment, **06.03**
D 716–86(1991)$^{\epsilon 1}$ Test Methods for Evaluating Mica Pigment, **06.03**
D 717–86(1991)$^{\epsilon 1}$ Test Methods for Analysis of Magnesium Silicate Pigment, **06.03**
D 718–86(1991)$^{\epsilon 1}$ Test Methods for Analysis of Aluminum Silicate Pigment, **06.03**
D 719–91 Test Methods for Analysis of Diatomaceous Silica Pigment, **06.03**
D 720–91(1995) Test Method for Free-Swelling Index of Coal, **05.05**
D 721–97 Test Method for Oil Content of Petroleum Waxes, **05.01**
D 722–93(1997) Test Method for Grease Resistance of Paper, **15.09**
D 723 Discontinued 1985; Method of Test for Degree of Staining of Paper by Alkali
D 724–94 Test Method for Surface Wettability of Paper (Angle-of-Contact Method), **15.09**
D 725 Discontinued 1980; Method for Identification of Wire Side of Paper; Reinstated 1990 as D 5039
D 726–94 Test Methods for Resistance of Nonporous Paper to Passage of Air, **15.09**
D 727–96 Test Method for Kerosine Number of Roofing and Flooring Felt by the Vacuum Method, **15.09**
D 728 Discontinued 1963; Specification for Vinyl Chloride-Acetate, Molding Compound Resin
D 729–95 Specification for Vinylidene Chloride Molding Compounds, **08.01**
D 730 Discontinued 1961; Specification for Low and Medium Voltage Pin-type Lime-Glass Insulators

Measurement of Freezing Points; Replaced by D 1015, D 1016
D 941 Discontinued 1993; Test Method for Density and Relative Density (Specific Gravity) of Liquids by Lipkin Bicapillary Pycnometer
D 942–90(1995)$^{\epsilon 1}$ Test Method for Oxidation Stability of Lubricating Greases by the Oxygen Bomb Method, **05.01**
D 943–98 Test Method for Oxidation Characteristics of Inhibited Mineral Oils, **05.01**
D 944 Discontinued 1966; Specification for Mechanical Roll Felt; Replaced by D 2475
D 945–92(1997) Test Methods for Rubber Properties in Compression or Shear (Mechanical Oscillograph), **09.01**
D 946–82(1993) Specification for Penetration-Graded Asphalt Cement for Use in Pavement Construction, **04.03**
D 947 Discontinued 1963; Specification for Hot-Mixed, Hot-Laid Asphaltic Concrete for Base and Surface Courses
D 948 Discontinued 1954; Method of Test for Weight Loss of Plastics on Heating; Replaced by E 95
D 949 Discontinued 1949; Recommended Practice for Molding Test Specimens of Phenolic Materials
D 950–98 Test Method for Impact Strength of Adhesive Bonds, **15.06**
D 951–94 Test Method for Water Resistance of Shipping Containers by Spray Method, **15.09**
D 952–95 Test Method for Bond or Cohesive Strength of Sheet Plastics and Electrical Insulating Materials, **08.01**
D 953–95 Test Method for Bearing Strength of Plastics, **08.01**
D 954 Discontinued 1962; Methods of Test for Apparent Density and Bulk Factor of Nonpouring Molding Powders
D 955–89(1996) Test Method for Measuring Shrinkage from Mold Dimensions of Molded Plastics, **08.01**
D 956 Discontinued 1992; Practice for Compression Molding Specimens of Amino Molding Compounds; Replaced by D 5224
D 957–95 Practice for Determining Surface Temperature of Molds for Plastics, **08.01**
D 958 Discontinued 1995; Practice for Determining Temperatures of Standard ASTM Molds for Test Specimens of Plastics; Replaced by D 957
D 959 Discontinued 1993; Method of Drop Test for Filled Bags; Replaced by D 5276
D 960–79(1998) Specification for Raw Castor Oil, **06.03**
D 961–86(1995)$^{\epsilon 1}$ Specification for Dehydrated Castor Oil, **06.03**
D 962–81(1994) Specification for Aluminum Powder and Paste Pigments for Paints, **06.03**
D 963 Discontinued 1993; Specification for Copper Phthalocyanine Blue Pigment
D 964–65(1996)$^{\epsilon 1}$ Specification for Copper Powder for Use in Antifouling Paints, **06.03**
D 965 Discontinued 1961; Specification for Heavy Petroleum Spirits (Heavy Mineral Spirits)
D 966 Discontinued 1982; Specification for Secondary Butyl Acetate (85 to 88% grade)
D 967 Discontinued 1951; Tentative Method of Testing Drying Oils; Replaced by D 555
D 968–93 Test Methods for Abrasion Resistance of Organic Coatings by Falling Abrasive, **06.01**
D 969–85(1993)$^{\epsilon 1}$ Test Method for Laboratory Determination of Degree of Bleeding of Traffic Paint, **06.02**
D 970–86(1991)$^{\epsilon 1}$ Test Methods for Para Red and Toluidine Red Pigments, **06.03**
D 971–91 Test Method for Interfacial Tension of Oil Against Water by the Ring Method, **10.03**
D 972–97 Test Method for Evaporation Loss of Lubricating Greases and Oils, **05.01**
D 973 Discontinued
D 975–98a Specification for Diesel Fuel Oils, **05.01**
D 976–91(1995)$^{\epsilon 1}$ Test Methods for Calculated Cetane Index of Distillate Fuels, **05.01**
D 977–98 Specification for Emulsified Asphalt, **04.03**
D 978 Discontinued 1963; Specification for Asphaltic Mixtures for Sheet Asphalt Pavements
D 979–96 Practice for Sampling Bituminous Paving Mixtures, **04.03**
D 980 Discontinued 1965; Method of Sampling and Analysis of Coal for Volatile Matter Determination in Connection with Smoke Ordinance
D 981 Discontinued 1974; Methods of Testing Analytical Filter Papers
D 982 Discontinued 1981; Method of Test for Organic Nitrogen in Paper and Paperboard
D 983 Discontinued 1981; Method of Test for Paraffin Wax Absorptiveness of Paper
D 984–97 Test Methods for Reducible Sulfur in Paper, **15.09**
D 985–97 Test Method for Brightness of Pulp, Paper, and Paperboard (Directional Reflectance at 457 nm), **15.09**
D 986 Discontinued 1966; Method of Preparation of Magnesium Oxide Standard for Spectral Reflectivity; Replaced by E 259
D 987 Discontinued 1969; Method of Test for Stretch of Paper and Paper Products Under Tension
D 988 Discontinued 1958; Methods of Test for Water Vapor Permeability of Paper and Paperboard; Replaced by E 96
D 989 Discontinued 1967; Method of Test for Detection of Free Sulfur in Electrical Insulating Oils; Replaced by D 1275
D 990 Discontinued 1974; Recommended Practice for Interlaboratory Testing of Textile Materials; Replaced by D 2904
D 991–89(1994) Test Method for Rubber Property—Volume Resistivity of Electrically Conductive and Antistatic Products, **09.01**
D 992 Discontinued 1984; Method of Test for Nitrate Ion in Water
D 993 Discontinued 1987; Method of Test for Sulfate-Reducing Bacteria in Water and Water-Formed Deposits; Replaced by D 4412
D 994–98 Specification for Preformed Expansion Joint Filler for Concrete (Bituminous Type), **04.03**
D 995–95b Specification for Mixing Plants for Hot-Mixed, Hot-Laid Bituminous Paving Mixtures, **04.03**
D 996–95$^{\epsilon 1}$ Terminology of Packaging and Distribution Environments, **15.09**
D 997 Discontinued 1993; Method for Drop Test for Loaded Cylindrical Containers; Replaced by D 5276
D 998–94 Test Method for Penetration of Liquids into Submerged Loaded Shipping Containers, **15.09**
D 999–96 Methods for Vibration Testing of Shipping Containers, **15.09**
D 1000–93 Test Methods for Pressure-Sensitive Adhesive-Coated Tapes Used for Electrical and Electronic Applications, **10.01**
D 1001 Discontinued 1961; Specification for Sieve Analysis of Granular Mineral Surfacing for Asphalt Roofing and Shingles
D 1002–94 Test Method for Apparent Shear Strength of Single-Lap-Joint Adhesively Bonded Metal Specimens by Tension Loading (Metal-To-Metal), **15.06**
D 1003–97 Test Method for Haze and Luminous Transmittance of Transparent Plastics, **08.01**
D 1004–94a Test Method for Initial Tear Resistance of Plastic Film and Sheeting, **08.01**
D 1005–95 Test Methods for Measurement of Dry-Film Thickness of Organic Coatings Using Micrometers, **06.01**
D 1006–93 Practice for Conducting Exterior Exposure Tests of Paints on Wood, **06.01**
D 1007–95 Specification for sec–Butyl Alcohol, **06.04**
D 1008 Discontinued 1985; Methods of Test for Water Vapor Transmission of Shipping Containers
D 1009 Discontinued 1972; Recommended Code for Designating Form of Material and Direction of Testing Plastics
D 1010 Discontinued 1981; Methods of Testing Asphalt Emulsions for Use As Protective Coatings for Metal; Replaced by D 2939
D 1011 Discontinued 1977; Method of Test for Night Visibility of Traffic Paints
D 1012 Discontinued 1975; Method of Test for Analine Point and Mixed Aniline Point of Hydrocarbon Solvents; Replaced by D 611
D 1013–93(1998) Test Method for Determining Total Nitrogen in Resins and Plastics, **06.03**
D 1014–95 Practice for Conducting Exterior Exposure Tests of Paints on Steel, **06.01**
D 1015–94 Test Method for Freezing Points of High-Purity Hydrocarbons, **05.01**
D 1016–94 Test Method for Purity of Hydrocarbons from Freezing Points, **05.01**
D 1017 Discontinued 1981; Test Method for Benzene and Toluene in 250°F and Lighter Petroleum Products by Ultraviolet Spectrophotometry
D 1018–91(1995) Test Method for Hydrogen in Petroleum Fractions, **05.01**
D 1019 Discontinued 1986; Method of Test for Olefinic Plus Aromatic Hydrocarbons in Petroleum Distillates
D 1020 Discontinued 1984; Method of Test for Alpha Acetylenes in Butadiene, Butadiene Concentrates, and Butane-Butene Mixtures (Silver Nitrate Method)
D 1021 Discontinued 1983; Method of Test for Oxygen in Light Hydrocarbon Vapors
D 1022 Discontinued 1984; Method of Test for Peroxide Content of Light Hydrocarbons
D 1023 Discontinued 1984; Method of Test for Separation of Residue from Butadiene
D 1024 Discontinued 1970; Method of Test for Butadiene Dimer and Styrene in Butadiene Concentrates
D 1025–96 Test Method for Nonvolatile Residue of Polymerization Grade Butadiene, **05.01**
D 1026 Discontinued 1991; Test Method for Sodium in Lubricating Oils and Additives (Gravimetric Method)
D 1027 Discontinued 1980; Methods for Creasing Paper for Permeability Tests
D 1028 Discontinued 1982; Test Method for Ply Separation (Wet) of Solid and Corrugated Fiberboard; Replaced by TAPPI T 812
D 1029–95 Test Method for Peeling Resistance of Paper and Paperboard, **15.09**
D 1030–95 Test Method for Fiber Analysis of Paper and Paperboard, **15.09**
D 1031 Discontinued 1992; Specification for Creosoted End-Grain Wood Block Flooring for Interior Use
D 1032 Discontinued 1993; Specification for Chromated Zinc Chloride
D 1033 Discontinued 1933; Methods of Chemical Analysis of Chromated Zinc Chloride
D 1034–94 Specification for Fluor-Chrome-Arsenate-Phenol, **04.10**
D 1035–94 Test Methods for Chemical Analysis of Fluor-Chrome-Arsenate-Phenol, **04.10**
D 1036–98 Test Methods of Static Tests of Wood Poles, **04.10**
D 1037–96a Test Methods for Evaluating Properties of Wood-Base Fiber and Particle Panel Materials, **04.10**
D 1038–83(1993) Terminology Relating to Veneer and Plywood, **04.10**
D 1039–94 Test Methods for Glass-Bonded Mica Used as Electrical Insulation, **10.01**
D 1040 Discontinued 1981; Specification for Uninhibited Mineral Insulating Oil for Use in Transformers and in Oil Circuit Breakers
D 1041 Redesignated E 104

D 1245–84(1994)$^{\varepsilon 1}$ Practice for Examination of Water-Formed Deposits by Chemical Microscopy, **11.02**

D 1246–95 Test Method for Iodide and Bromide in Water, **11.01**

D 1247 Discontinued 1987; Method of Sampling Manufactured Gas

D 1248–98 Specification for Polyethylene Plastics Molding and Extrusion Materials, **08.01**

D 1249–92 Specification for Octyl Ortho-Phthalate Ester Plasticizers, **08.01**

D 1250–80(1997)$^{\varepsilon 1}$ Guide for Petroleum Measurement Tables, (Description only; tables published separately in 12 volumes), **05.01**

D 1251–94 Test Method for Water Vapor Permeability of Packages by Cycle Method, **15.09**

D 1252–95 Test Methods for Chemical Oxygen Demand (Dichromate Oxygen Demand) of Water, **11.02**

D 1253–86(1996) Test Methods for Residual Chlorine in Water, **11.01**

D 1254 Discontinued 1981; Method of Test for Nitrite Ion in Water

D 1255 Discontinued 1968; Methods of Test for Sulfides in Industrial Water and Industrial Waste Water

D 1256 Discontinued 1967; Scheme for Analysis of Industrial Water and Industrial Waste Water

D 1257–90(1997) Specification for High-Gravity Glycerin, **06.04**

D 1258–95 Test Method for High-Gravity Glycerin, **06.04**

D 1259–85(1994) Test Methods for Nonvolatile Content of Resin Solutions, **06.01**

D 1260 Discontinued 1966; Method of Test for Color Difference Using the Hunter Multipurpose Reflectometer; Combined with D 2244

D 1261 Discontinued 1984; Method of Test for Effect of Grease on Copper

D 1262 Discontinued 1991; Test Method for Lead in New and Used Greases

D 1263–94 Test Method for Leakage Tendencies of Automotive Wheel Bearing Greases, **05.01**

D 1264–96 Test Method for Determining the Water Washout Characteristics of Lubricating Greases, **05.01**

D 1265–97 Practice for Sampling Liquefied Petroleum (LP) Gases (Manual Method), **05.01**

D 1266–98 Test Method for Sulfur in Petroleum Products (Lamp Method), **05.01**

D 1267–95 Test Method for Vapor Pressure of Liquefied Petroleum (LP) Gases (LP-Gas Method), **05.01**

D 1268 Discontinued 1975; Method of Test for Unsaturated Light Hydrocarbons (Silver-Mercuric Nitrate Method)

D 1269 Discontinued 1975; Method of Test for Lead Antiknock Compounds in Gasoline (Polarographic Method)

D 1270 Discontinued 1959; Method of Test for Dimensional Changes of Paper with Changes in Moisture Conditions

D 1271 Discontinued 1970; Specification for Copperized Chromated Zinc Chloride

D 1272–56(1997)$^{\varepsilon 1}$ Specification for Pentachlorophenol, **04.10**

D 1273 Discontinued 1970; Methods for Chemical Analysis of Copperized Chromated Zinc Chloride

D 1274–95 Test Methods for Chemical Analysis of Pentachlorophenol, **04.10**

D 1275–96a Test Method for Corrosive Sulfur in Electrical Insulating Oils, **10.03**

D 1276 Discontinued 1985; Method of Test for Water Vapor Transmission of Shipping Containers by Cycle Method

D 1277 Discontinued 1972; Specification for Nonrigid Thermoplastic Compounds for Automotive and Aeronautical Applications

D 1278–91a(1997)$^{\varepsilon 1}$ Test Methods for Rubber from Natural Sources—Chemical Analysis, **09.01**

D 1279 Discontinued 1999; Test Method for Buffering Action of Metal Cleaners

D 1280–89(1995) Test Method of Total Immersion Corrosion Test for Soak Tank Metal Cleaners, **15.04**

D 1281 Discontinued 1989; Test Method for Rinsing Properties of Metal Cleaners

D 1282–96 Test Method for Resistance to Airflow as an Indication of Average Fiber Diameter of Wool Top, Card Sliver, and Scoured Wool, **07.01**

D 1283–85(1995)$^{\varepsilon 1}$ Test Method for Alkali-Soluability of Wool, **07.01**

D 1284 Discontinued 1991; Test Methods for Relaxation and Consolidation Dimensional Changes of Stabilized Knit Wool Fabrics

D 1285 Discontinued 1967; Tolerances for Yarns Containing Wool; Replaced by D 2644, D 2645

D 1286 Discontinued 1983; Method of Test for Effect of Mold Contamination on Permanence of Adhesives Preparations and Adhesives Bonds; Replaced by D 4300

D 1287–91(1997)$^{\varepsilon 1}$ Test Method for pH of Engine Coolants and Antirusts, **15.05**

D 1288 Discontinued 1985; Method of Test for Total Ash and Silica in Water-Emulsion Polishes

D 1289 Discontinued 1969; Method of Test for Nonvolatile Matter (Total Solids) in Water-Emulsion Waxes; Replaced by D 2834

D 1290–95 Test Method for Sediment in Water-Emulsion Polishes by Centrifuge, **15.04**

D 1291–89(1994)$^{\varepsilon 1}$ Practice for Estimation of Chlorine Requirement or Demand of Water, or Both, **11.02**

D 1292–86(1995)$^{\varepsilon 1}$ Test Method for Odor in Water, **11.01**

D 1293–95 Test Methods for pH of Water, **11.01**

D 1294–95a Test Method for Tensile Strength and Breaking Tenacity of Wool Fiber Bundles 1-in. (25.4-mm) Gage Length, **07.01**

D 1295 Discontinued 1978; Method of Test for Wrinkle Recovery of Textile Fabrics Using the Vertical Strip Apparatus

D 1296–93(1996) Test Method for Odor of Volatile Solvents and Diluents, **06.04**

D 1297 Discontinued 1967; Method of Test for No-Dirt-Retention Time of Traffic Paint

D 1298–85(1990)$^{\varepsilon 1}$ Test Method for Density, Relative Density (Specific Gravity), or API Gravity of Crude Petroleum and Liquid Petroleum Products by Hydrometer Method, **05.01**

D 1299 Discontinued 1992; Test Method for Shrinkage of Molded and Laminated Thermosetting Plastics at Elevated Temperature

D 1300 Discontinued 1963; Specification and Methods of Test for Laminated Thermosetting Decorative Sheets

D 1301–91 Test Methods for Chemical Analysis of White Lead Pigments, **06.03**

D 1302 Discontinued 1968; Method for Analysis of Carbureted Water Gas by the Mass Spectrometer

D 1303 Discontinued 1986; Method of Test for Total Chlorine in Vinyl Chloride Polymers and Copolymers

D 1304–93 Test Methods for Adhesives Relative to Their Use as Electrical Insulation, **15.06**

D 1305–87(1998) Specification for Electrical Insulating Paper and Paperboard—Sulfate (Kraft) Layer Type, **10.01**

D 1306–88(1996)$^{\varepsilon 1}$ Test Method for Phthalic Anhydride Content of Alkyd Resins and Esters Containing Other Dibasic Acids (Gravimetric), **06.03**

D 1307 Discontinued 1982; Method of Test for Phthalic Anhydride Content of Alkyd Resins and Esters Containing Other Dibasic Acids (Spectrophotometric)

D 1308–87(1998) Test Method for Effect of Household Chemicals on Clear and Pigmented Organic Finishes, **06.02**

D 1309–93 Test Method for Settling Properties of Traffic Paints During Accelerated Storage, **06.02**

D 1310–86(1997)$^{\varepsilon 1}$ Test Method for Flash Point and Fire Points of Liquids by Tag Open-Cup Apparatus, **06.01**

D 1311 Discontinued 1968; Method of Test for Viscosity Reduction Power of Hydrocarbon Solvents

D 1312–93(1998) Test Methods for Apparent Free Phenols in Synthetic Phenolic Resins or Solutions Used for Coating Purposes, **06.03**

D 1313 Discontinued 1988; Method of Test for Sludge Formation in Mineral Transformer Oil by High-Pressure Oxidation Bomb

D 1314 Discontinued 1965; Method of Test for Sludge Formation in Mineral Transformer Oil by Sludge Accumulation; Replaced by D 2440

D 1315 Discontinued 1981; Method of Test for Water in Insulating Oils by Extraction

D 1316–93(1996) Test Method for Fineness of Grind of Printing Inks by the NPIRI Grindometer, **06.02**

D 1317 Discontinued 1994; Test Method for Chlorine in New and Used Lubricants (Sodium Alcoholate Method)

D 1318 Discontinued 1992; Test Method for Sodium in Residual Fuel Oil (Flame Photometric Method)

D 1319–98 Test Method for Hydrocarbon Types in Liquid Petroleum Products by Fluorescent Indicator Adsorption, **05.01**

D 1320 Discontinued 1991; Test Method for Tensile Strength of Paraffin Wax

D 1321–97 Test Method for Needle Penetration of Petroleum Waxes, **05.01**

D 1322–97 Test Method for Smoke Point of Aviation Turbine Fuels, **05.01**

D 1323 Discontinued 1980; Methods of Test for Mercaptan Sulfur in Aviation Turbine Fuels; Replaced by D 3227

D 1324–83(1993)$^{\varepsilon 1}$ Specification for Modified Wood, **04.10**

D 1325–94 Specification for Ammoniacal Copper Arsenate and Ammoniacal Copper Zinc Arsenate, **04.10**

D 1326–94 Test Method for Chemical Analysis of Ammoniacal Copper Arsenate and Ammoniacal Copper Zinc Arsenate, **04.10**

D 1327–97a Specification for Bitumen-Saturated Woven Burlap Fabrics Used in Roofing and Waterproofing, **04.04**

D 1328 Discontinued 1992; Test Method for Staining Properties of AsphaltReplaced by D 2746

D 1329–88(1998) Test Method for Evaluating Rubber Property—Retraction at Lower Temperatures (TR Test), **09.01**

D 1330–85(1995)$^{\varepsilon 1}$ Specification for Rubber Sheet Gaskets, **09.02**

D 1331–89(1995) Test Methods for Surface and Interfacial Tension of Solutions of Surface-Active Agents, **15.04**

D 1332 Discontinued 1972; Methods of Test for Build-Up and Spread of Glass Yarn As Wrap (Serving) or Braid Over Electrical Conductors; Replaced by D 668

D 1333 Discontinued 1960; Methods of Testing Elastic Fabrics; Replaced by D 1775

D 1334–96 Test Method for Wool Content of Raw Wool—Commercial Scale, **07.01**

D 1335–98 Test Method for Tuft Bind of Pile Yarn Floor Coverings, **07.01**

D 1336–97 Test Method for Distortion of Yarn in Woven Fabrics, **07.01**

D 1337–96 Test Method for Storage Life of Adhesives by Consistency and Bond Strength, **15.06**

D 1338–91 Test Method for Working Life of Liquid or Paste Adhesives by Consistency and Bond Strength, **15.06**

D 1339 Discontinued 1990; Test Methods for Sulfite Ion in Water

D 1340 Discontinued 1971; Method of Test for Oily Matter in Industrial Waste Water

D 1341 Discontinued 1974; Method for Determination of Thickness of Internal Deposits on Tubular Heat Exchange Surfaces

D 1342–92(1996) Test Method for Paraffin-Type Hydrocarbons in Carnauba Wax, **15.04**

D 1343–95 Test Method for Viscosity of Cellulose Derivatives by Ball-Drop Method, **06.03**

D 1739–98 Test Method for Collection and Measurement of Dustfall (Settleable Particulate Matter), **11.03**
D 1740–96 Test Method for Luminometer Numbers of Aviation Turbine Fuels, **05.01**
D 1741 Discontinued 1991; Test Method for Functional Life of Ball Bearing Greases
D 1742–94 Test Method for Oil Separation from Lubricating Grease During Storage, **05.01**
D 1743–94$^{\epsilon 1}$ Test Method for Corrosion Preventive Properties of Lubricating Greases, **05.01**
D 1744–92 Test Method for Water in Liquid Petroleum Products by Karl Fischer Reagent, **05.01**
D 1745 Discontinued 1966; Method for Calculation of Absolute Viscosity; Combined with D 445
D 1746–97 Test Method for Transparency of Plastic Sheeting, **08.01**
D 1747–94 Test Method for Refractive Index of Viscous Materials, **05.01**
D 1748–83(1993)$^{\epsilon 1}$ Test Method for Rust Protection by Metal Preservatives in the Humidity Cabinet, **05.01**
D 1749–93(1997) Practice for Interlaboratory Evaluation of Test Methods Used with Paper and Paper Products, **15.09**
D 1750 Discontinued 1986; Tables for Positive Displacement Meter Prover Tanks
D 1751–97 Specification for Preformed Expansion Joint Filler for Concrete Paving and Structural Construction (Nonextruding and Resilient Bituminous Types), **04.03**
D 1752–84(1996)$^{\epsilon 1}$ Specification for Preformed Sponge Rubber and Cork Expansion Joint Fillers for Concrete Paving and Structural Construction, **04.03**
D 1753 Discontinued 1977; Specification for Hot-Mixed, Hot-Laid Tar Paving Mixtures; Replaced by D 3515
D 1754–97 Test Method for Effects of Heat and Air on Asphaltic Materials (Thin-Film Oven Test), **04.03**
D 1755–92 Specification for Poly(Vinyl Chloride) Resins, **08.01**
D 1756–96 Test Method for Determination as Carbon Dioxide of Carbonate Carbon in Coal, **05.05**
D 1757–96 Test Method for Sulfate Sulfur in Ash from Coal and Coke, **05.05**
D 1758–96 Test Method of Evaluating Wood Preservatives by Field Tests with Stakes, **04.10**
D 1759 Discontinued 1978; Method of Conducting Shear-Block Test for Quality Control of Glue Bonds in Scarf Joints
D 1760–96 Specification for Pressure Treatment of Timber Products, **04.10**
D 1761–88(1995)$^{\epsilon 1}$ Test Methods for Mechanical Fasteners in Wood, **04.10**
D 1762–84(1995)$^{\epsilon 1}$ Method for Chemical Analysis of Wood Charcoal, **04.10**
D 1763–94 Specification for Epoxy Resins, **08.01**
D 1764–97 Specification for Rubber Latex Products for Automotive Applications, **09.02**
D 1765–99 Classification System for Carbon Blacks Used in Rubber Products, **09.01**
D 1766–96 Test Method for Rubber Chemicals—Solubility, **09.01**
D 1767–89(1995)$^{\epsilon 1}$ Test Method for Ethylene Diamine Tetraacetate (EDTA) in Soaps or Synthetic Detergents, **15.04**
D 1768–89(1995)$^{\epsilon 1}$ Test Method for Sodium Alkylbenzene Sulfonate in Synthetic Detergents by Ultraviolet Absorption, **15.04**
D 1769 Discontinued 1989; Test Method for Linear Density of Cotton Fibers (Array Sample)
D 1770–94 Test Method for Neps, Vegetable Matter, and Colored Fiber in Wool Top, **07.01**
D 1771 Discontinued 1981; Method of Sample Reweighing of Lots of Packaged Raw Wool
D 1772 Discontinued 1966; Method of Test for Imperfection Count of Textile Yarns
D 1773 Discontinued 1962; Method of Test for Dimensional Change of Knitted Fabrics in Laundering and Dimensional Restorability of the Laundered Fabric
D 1774–94 Test Methods for Elastic Properties of Textile Fibers, **07.01**
D 1775–94 Test Method for Tension and Elongation of Wide Elastic Fabrics, **07.01**
D 1776–98 Practice for Conditioning Textiles for Testing, **07.01**
D 1777–96 Test Method for Thickness of Textile Materials, **07.01**
D 1778 Discontinued 1966; Method of Test for Colorfastness to Commercial Laundering and to Domestic Washing of Tufted Rugs and Carpets
D 1779–98 Specification for Adhesive for Acoustical Materials, **15.06**
D 1780–94 Practice for Conducting Creep Tests of Metal-to-Metal Adhesives, **15.06**
D 1781–98 Test Method for Climbing Drum Peel for Adhesives, **15.06**
D 1782–95 Test Methods for Operating Performance of Particulate Cation-Exchange Materials, **11.02**
D 1783–91(1995) Test Methods for Phenolic Compounds in Water, **11.02**
D 1784–97 Specification for Rigid Poly(Vinyl Chloride) (PVC) Compounds and Chlorinated Poly(Vinyl Chloride) (CPVC) Compounds, **08.01**
D 1785–96b Specification for Poly(Vinyl Chloride) (PVC) Plastic Pipe, Schedules 40, 80, and 120, **08.04**
D 1786–96 Specification for Toluene Diisocyanate, **08.01**
D 1787 Discontinued 1995; Test Method for Pentosans in Cellulose
D 1788 Discontinued 1989; Specification for Rigid Acrylonitrile-Butadiene-Styrene (ABS) Plastics
D 1789 Discontinued 1984; Test Method for Welding Performance of Poly(Vinyl Chloride) Structures
D 1790–94$^{\epsilon 1}$ Test Method for Brittleness Temperature of Plastic Sheeting by Impact, **08.01**
D 1791–93(1998) Test Method for Accelerated Aging of Liquid Water-Emulsion Floor Polishes, **15.04**
D 1792–82(1997)$^{\epsilon 1}$ Test Method for Long-Term Removability Properties of Emulsion Floor Polishes, **15.04**
D 1793–92(1996)$^{\epsilon 1}$ Test Method for Water Spotting of Emulsion Floor Polishes, **15.04**
D 1794 Discontinued 1993; Test Method for Alcohol-Benzene Soluble Matter in Cellulose
D 1795–96 Test Method for Intrinsic Viscosity of Cellulose, **06.03**
D 1796–97 Test Method for Water and Sediment in Fuel Oils by the Centrifuge Method (Laboratory Procedure), **05.01**
D 1797 Discontinued 1974; Method of Test for Ash in Casein and Isolated Soy Protein
D 1798 Discontinued 1974; Method of Test for Fixed Ash in Casein and Isoiated Soy Protein
D 1799–93(1997) Test Method for Carbon Black—Sampling Packaged Shipments, **09.01**
D 1800 Discontinued 1974; Method of Test for Aikaii Requirement of Casein and Isoiated Soy Protein
D 1801 Discontinued 1974; Method of Test for Free Acidity in Casein and Isolated Soy Protein
D 1802 Discontinued 1974; Method of Test for Moisture in Casein and Isolated Soy Protein
D 1803 Discontinued 1974; Method of Test for Nitrogen in Caseln and Isolated Soy Protein
D 1804 Discontinued 1974; Method of Test for Oil in Casein and Isolated Soy Protein
D 1805 Discontinued 1972; Recommended Practice for Estimating Relative Temperature Limits of Dielectric Liquids
D 1806 Discontinued 1962; Method of Test for Refractive Index of Askarels; Combined with D 1807
D 1807–94 Test Methods for Refractive Index and Specific Optical Dispersion of Electrical Insulating Liquids, **10.03**
D 1808 Discontinued 1980; Method of Test for Volume of Oil in Oil-Contaminated Askarels
D 1809 Discontinued 1967; Method for Sampling Askarels; Combined with D 923
D 1810–94 Test Method for Specific Gravity of Askarels, **10.03**
D 1811 Discontinued 1961; Method of Test for Free Chlorides in Askarels; Replaced by D 1821
D 1812 Discontinued 1981; Method of Test for Plasitc Properties of Coal by Gieseler Plastometer
D 1813–70(1994)$^{\epsilon 1}$ Test Method for Measuring Thickness of Leather Test Specimens, **15.04**
D 1814–70(1994)$^{\epsilon 1}$ Test Method for Measuring Thickness of Leather Units, **15.04**
D 1815–96 Test Method for Water Absorption (Static) of Vegetable Tanned Leather, **15.04**
D 1816–97 Test Method for Dielectric Breakdown Voltage of Insulating Oils of Petroleum Origin Using VDE Electrodes, **10.03**
D 1817–96 Test Method for Rubber Chemicals—Density, **09.01**
D 1818 Discontinued 1990; Specification for Continuity of Quality of Electrical Insulating Oil for Low-Pressure Cable Systems
D 1819 Discontinued 1990; Specification for Continuity of Quality of Electrical Insulating Oil for High-Pressure Cable Systems
D 1820–95 Test Method for Hydrolyzable Chlorine Compounds in Chlorinated Aromatic Hydrocarbons (Askarels), **10.03**
D 1821–95 Test Method for Inorganic Chlorides in Askarels, **10.03**
D 1822–93 Test Method for Tensile-Impact Energy to Break Plastics and Electrical Insulating Materials, **08.01**
D 1823–95 Test Method for Apparent Viscosity of Plastisols and Organosols at High Shear Rates by Extrusion Viscometer, **08.01**
D 1824–95 Test Method for Apparent Viscosity of Plastisols and Organosols at Low Shear Rates by Brookfield Viscometer, **08.01**
D 1825–92(1997) Practice for Etching and Cleaning Copper-Clad Electrical Insulating Materials and Thermosetting Laminates for Electrical Testing, **10.01**
D 1826–94(1998) Test Method for Calorific Value of Gases in Natural Gas Range by Continuous Recording Calorimeter, **05.05**
D 1827–92(1996)$^{\epsilon 1}$ Test Method for Gas Content (Nonacidic) of Insulating Liquids by Displacement with Carbon Dioxide, **10.03**
D 1828–96 Practice for Atmospheric Exposure of Adhesive-Bonded Joints and Structures, **15.06**
D 1829–90(1994)$^{\epsilon 1}$ Test Method for Electrical Resistance of Ceramic Materials at Elevated Temperatures, **15.02**
D 1830–94 Test Method for Thermal Endurance of Flexible Sheet Materials Used for Electrical Insulation by the Curved Electrode Method, **10.01**
D 1831–94$^{\epsilon 1}$ Test Method for Roll Stability of Lubricating Grease, **05.01**
D 1832–87(1993)$^{\epsilon 1}$ Test Method for Peroxide Number of Petroleum Wax, **05.01**
D 1833–87(1993)$^{\epsilon 1}$ Test Method for Odor of Petroleum Wax, **05.01**
D 1834–90(1995)$^{\epsilon 1}$ Test Method for 20° Specular Gloss of Waxed Paper, **05.01**
D 1835–97 Specification for Liquefied Petroleum (LP) Gases, **05.01**
D 1836–91(1994) Specification for Commercial Hexanes, **06.04**
D 1837–94 Test Method for Volatility of Liquefied Petroleum (LP) Gases, **05.01**
D 1838–91(1996)$^{\epsilon 2}$ Test Method for Copper Strip Corrosion by Liquefied Petroleum (LP) Gases, **05.01**
D 1839–91(1995) Test Method for Amyl Nitrate in Diesel Fuels, **05.01**

D 2035–80(1995)$^{\epsilon1}$ Recommended Practice for Coagulation-Flocculation Jar Test of Water, **11.02**
D 2036–98 Test Methods for Cyanides in Water, **11.02**
D 2037 Discontinued 1981; Method of Test for Evaluating Inhibitory Toxicity of Water to Diatoms
D 2038 Discontinued 1989; Method for Radioactive Barium in Water
D 2039 Discontinued 1988; Method of Test for Radioactive Manganese in Industrial Water and Industrial Waste Water
D 2040 Discontinued 1970; Method of Test for Strontium 90 in Industrial Water and Industrial Waste Water
D 2041–95 Test Method for Theoretical Maximum Specific Gravity and Density of Bituminous Paving Mixtures, **04.03**
D 2042–97 Test Method for Solubility of Asphalt Materials in Trichloroethylene, **04.03**
D 2043–94(1998) Test Method for Silver Tarnishing by Paper, **15.09**
D 2044 Discontinued 1980; Method of Test for Moisture in Paper and Paperboard by Toluene Distillation
D 2045 Discontinued 1971; Method of Test for Water Absorptiveness of Nonbibulous Paper and Paperboard (COBB Test)
D 2046 Discontinued 1969; Method of Test for Nonvolatile Matter (Total Solids) in Solvent-Board Waxes; Replaced by D 2834
D 2047–93 Test Method for Static Coefficient of Friction of Polish-Coated Floor Surfaces as Measured by the James Machine, **15.04**
D 2048–92(1996) Test Method for Powdering of Floor Polish Films, **15.04**
D 2049 Discontinued 1984; Test Method for Relative Density of Cohesionless Soils; Replaced by D 4253, D 4254
D 2050–87(1997) Terminology Relating to Zippers, **07.01**
D 2051–86(1997) Test Method for Durability of Finish of Zippers to Laundering, **07.01**
D 2052–85(1996) Test Method for Colorfastness of Zippers to Drycleaning, **07.01**
D 2053–99 Test Method for Colorfastness of Zippers to Light, **07.01**
D 2054–99 Test Method for Colorfastness of Zipper Tapes to Crocking, **07.01**
D 2055 Discontinued 1976; Method of Test for Colorfastness of Zipper Tapes to Perspiration
D 2056 Discontinued 1970; Method of Test for Resistance of Finish of Zippers to Dry Abrasion
D 2057–96 Test Method for Colorfastness of Zippers to Laundering, **07.01**
D 2058–87(1997) Test Method for Durability of Finish of Zippers to Drycleaning, **07.01**
D 2059–87(1997) Test Method for Resistance of Zippers to Salt Spray (Fog), **07.01**
D 2060–95 Test Methods for Measuring Zipper Dimensions, **07.01**
D 2061–93(1998) Test Methods for Strength Tests for Zippers, **07.01**
D 2062–87(1997)$^{\epsilon1}$ Test Methods for Operability of Zippers, **07.01**
D 2063–91(1998) Test Methods for Measurement of Torque Retention for Packages with Continuous Thread Closures, **15.09**
D 2064–91 Test Method for Print Resistance of Architectural Paints, **06.02**
D 2065–96 Test Method for Determination of Edge Performance of Composite Wood Products Under Surfactant Accelerated Moisture Stress, **06.02**
D 2066–97 Test Methods for Relative Tinting Strength of Paste-Type Printing Ink Dispersions, **06.02**
D 2067–97 Test Method for Coarse Particles in Printing Ink Dispersions, **06.02**
D 2068–97 Test Method for Filter Blocking Tendency of Distillate Fuel Oils, **05.01**
D 2069–91(1998) Specification for Marine Fuels, **05.01**
D 2070–91(1996) Test Method for Thermal Stability of Hydraulic Oils, **05.01**
D 2071–87(1998) Test Methods for Fatty Nitrogen Products, **06.03**
D 2072–92(1998)$^{\epsilon1}$ Test Method for Water in Fatty Nitrogen Compounds, **06.03**
D 2073–92(1998)$^{\epsilon1}$ Test Methods for Total, Primary, Secondary, and Tertiary Amine Values of Fatty Amines, Amidoamines, and Diamines by Referee Potentiometric Method, **06.03**
D 2074–92(1998) Test Methods for Total, Primary, Secondary, and Tertiary Amine Values of Fatty Amines by Alternative Indicator Method, **06.03**
D 2075–92 Test Method for Iodine Value of Fatty Amines, Amidoamines, and Diamines, **06.03**
D 2076–92(1998) Test Methods for Acid Value and Amine Value of Fatty Quaternary Ammonium Chlorides, **06.03**
D 2077–92(1998) Test Method for Ash in Fatty Quaternary Ammonium Chlorides, **06.03**
D 2078–86(1995)$^{\epsilon1}$ Test Method for Iodine Value of Fatty Quaternary Ammonium Chlorides, **06.03**
D 2079–92(1998) Test Method for Nonvolatile Matter (Solids) in Fatty Quaternary Ammonium Chlorides, **06.03**
D 2080–92(1998) Test Method for Average Molecular Weight of Fatty Quaternary Ammonium Chlorides, **06.03**
D 2081–92(1998) Test Method for pH of Fatty Quaternary Ammonium Chlorides, **06.03**
D 2082–92(1998) Test Method for Percent of Nonamines in Fatty Nitrogen Compounds, **06.03**
D 2083–92(1998) Method for Calculation of Percent of Primary, Secondary, and Tertiary Amines in Fatty Amines, **06.03**
D 2084–95 Test Method for Rubber Property—Vulcanization Using Oscillating Disk Cure Meter, **09.01**
D 2085–89(1995)$^{\epsilon1}$ Test Method for Determining Chloride Used in Calculating Pentachlorophenol in Solutions or Wood (Lime Ignition Method), **04.10**
D 2086–89(1993)$^{\epsilon1}$ Test Method for Acidity in Vinyl Acetate and Acetaldehyde, **06.04**
D 2087–97 Test Method for Iron in Formaldehyde Solutions, **06.04**
D 2088 Discontinued 1979; Method for Determination of Low Concentrations of Lead in Paint; Replaced by D 3335
D 2089 Discontinued 1984; Method of Test for Water-Soluble Matter in White Pigments by Specific Resistance Method; Combined with D 2448
D 2090–98 Test Method for Clarity and Cleanness of Paint and Ink Liquids, **06.03**
D 2091–96 Test Method for Print Resistance of Lacquers, **06.02**
D 2092–95 Guide for Treatment of Zinc-Coated (Galvanized) Steel Surfaces for Painting, **06.02**
D 2093–97 Practice for Preparation of Surfaces of Plastics Prior to Adhesive Bonding, **15.06**
D 2094–91(1995) Practice for Preparation of Bar and Rod Specimens for Adhesion Tests, **15.06**
D 2095–96$^{\epsilon1}$ Test Method for Tensile Strength of Adhesives by Means of Bar and Rod Specimens, **15.06**
D 2096–93(1998)$^{\epsilon1}$ Test Method for Colorfastness and Transfer of Color in the Washing of Leather, **15.04**
D 2097–95 Method of Flex Testing of Finish on Upholstery Leather, **15.04**
D 2098–91(1997)$^{\epsilon1}$ Test Method for Dynamic Water Resistance of Shoe Upper Leather by the Dow Corning Leather Tester, **15.04**
D 2099–98 Test Method for Dynamic Water Resistance of Shoe Upper Leather by the Maeser Water Penetration Tester, **15.04**
D 2100–95 Specification for Asbestos Textiles Used for Electrical Insulating Purposes, **04.05**
D 2101 Discontinued 1995; Test Method for Tensile Properties of Single Man-Made Textile Fibers Taken from Yarns and Tows
D 2102–96 Test Method for Shrinkage of Textile Fibers, **07.01**
D 2103–97 Specification for Polyethylene Film and Sheeting, **08.01**
D 2104–96 Specification for Polyethylene (PE) Plastic Pipe, Schedule 40, **08.04**
D 2105–97 Test Method for Longitudinal Tensile Properties of "Fiberglass" (Glass-Fiber-Reinforced Thermosetting-Resin) Pipe and Tube, **08.04**
D 2106–95 Test Method for the Determination of Amine Acid Acceptance (Alkalinity) of Halogenated Organic Solvents, **15.05**
D 2107 Discontinued 1975; Method of Test for Nonamine Acid Acceptance of Halogenated Organic Solvent, Decreasing Grade (Reflux Method)
D 2108–97 Test Method for Color of Halogenated Organic Solvents and Their Admixtures (Platinum-Cobalt Scale), **15.05**
D 2109–96 Test Methods for Nonvolatile Matter in Halogenated Organic Solvents and Their Admixtures, **15.05**
D 2110–96 Test Method for pH of Water Extractions of Halogenated Organic Solvents and Their Admixtures, **15.05**
D 2111–95 Test Methods for Specific Gravity of Halogenated Organic Solvents and Their Admixtures, **15.05**
D 2112–95 Test Method for Oxidation Stability of Inhibited Mineral Insulating Oil by Rotating Bomb, **10.03**
D 2113–83(1993)$^{\epsilon1}$ Practice for Diamond Core Drilling for Site Investigation, **04.08**
D 2114 Discontinued 1970; Specification for Rigid Poly(Vinyl Chloride-Vinyl Acetate) Compounds; Replaced by D 1784
D 2115–92(1997) Practice for Oven Heat Stability of Poly(Vinyl Chloride) Compositions, **08.01**
D 2116–97 Specification for FEP-Fluorocarbon Molding and Extrusion Materials, **08.01**
D 2117 Discontinued 1994; Test Method for Melting Point of Semicrystalline Polymers by the Hot Stage Microscopy Method
D 2118–96 Practice for Assigning a Standard Commercial Moisture Content for Wool and Its Products, **07.01**
D 2119–96 Test Method for Aldehydes in Styrene Monomer, **06.04**
D 2120 Discontinued 1992; Test Method for Inhibitor, p-tert-Butylcatechol, in Styrene Monomer
D 2121–95 Test Methods for Polymer Content of Styrene Monomer and α–Methylstyrene, **06.04**
D 2122–98 Test Method for Determining Dimensions of Thermoplastic Pipe and Fittings, **08.04**
D 2123 Discontinued 1989; Specification for Rigid Poly(Vinyl Chloride-Vinyl Acetate) Plastic Sheet
D 2124–70(1994) Test Method for Analysis of Components in Poly(Vinyl Chloride) Compounds Using an Infrared Spectrophotometric Technique, **08.01**
D 2125 Discontinued 1971; Specification for Cellular Polystyrene
D 2126–94 Test Method for Response of Rigid Cellular Plastics to Thermal and Humid Aging, **08.01**
D 2127 Discontinued 1970; Method of Test for Water Absorption of Rigid Cellular Plastics; Replaced by D 2842
D 2128 Discontinued 1986; Specification for Rubberized Curled HairAcetal Resin Injection Molding and Extrusion Materials
D 2129–97 Test Method for Color of Water White Electrical Insulating Liquids, **10.03**
D 2130–90(1995)$^{\epsilon1}$ Test Method for Diameter of Wool and Other Animal Fibers by Microprojection, **07.01**
D 2131–97 Specification for Natural Muscovite Mica Splittings, **10.01**
D 2132–89 Test Method for Dust-and-Fog Tracking and Erosion Resistance of Electrical Insulating Materials, **10.01**
D 2133 Discontinued 1986; Specification for Acetal Resin Injection Molding and Extrusion Materials
D 2134–93 Test Method For Determining the Hardness of Organic Coatings

with a Sward-Type Hardness Rocker, **06.01**

D 2135 Discontinued 1989; Classification of Hard Rubbers

D 2136–94(1998) Test Method for Coated Fabrics—Low-Temperature Bend Test, **09.01**

D 2137–94$^{\varepsilon 1}$ Test Methods for Rubber Property—Brittleness Point of Flexible Polymers and Coated Fabrics, **09.01**

D 2138 Discontinued 1990; Test Method for Rubber Property—Adhesion to Textile Cord; Replaced by D 4776, D 4777

D 2139 Redesignated F 38

D 2140–97 Test Method for Carbon-Type Composition of Insulating Oils of Petroleum Origin, **10.03**

D 2141 Discontinued 1982; Method of Test for Adhesion Ratio of Polyethylene Film

D 2142 Discontinued 1967; Method of Test for Rapid Estimation of Staple Length of Wool Tops

D 2143–94 Test Method for Cyclic Pressure Strength of Reinforced, Thermosetting Plastic Pipe, **08.04**

D 2144–94 Test Methods for Examination of Electrical Insulating Oils by Infrared, **10.03**

D 2145 Discontinued 1979; Method of Test for Phenol Content of Phenol-Water Mixtures

D 2146 Discontinued 1986; Specification for Propylene Plastic Molding and Extrusion Materials; Replaced by D 4101

D 2147 Discontinued 1979; Method of Test for Detection and Estimation of Water-Insoluble Impurities in Refined Phenol by Cloud Point Depression

D 2148–95 Test Methods for Bondable Silicone Rubber Tapes Used for Electrical Insulation, **10.01**

D 2149–97 Test Method for Permittivity (Dielectric Constant) and Dissipation Factor of Solid Dielectrics at Frequencies to 10 MHz and Temperature to 500°C, **10.01**

D 2150 Discontinued 1987; Specification for Woven Roving Glass Fabric for Polyester-Glass Laminates; Replaced by D 4357

D 2151–95 Test Method for Staining of Poly(Vinyl Chloride) Compositions by Rubber Compounding Ingredients, **08.01**

D 2152–95 Test Method for Adequacy of Fusion of Extruded Poly (Vinyl Chloride)(PVC) Pipe and Molded Fittings by Acetone Immersion, **08.04**

D 2153 Discontinued 1976; Recommended Practice for Calculating Stress in Plastic Pipe Under Internal Pressure

D 2154 Discontinued 1975; Specification for Special Duty Propane; Replaced by D 1835

D 2155 Discontinued 1981; Method of Test for Autoignition Temperature of Liquid Petroleum Products; Replaced by E 659

D 2156–94 Test Method for Smoke Density in Flue Gases from Burning Distillate Fuels, **05.01**

D 2157–94 Test Method for Effect of Air Supply on Smoke Density in Flue Gases from Burning Distillate Fuels, **05.01**

D 2158–97 Test Method for Residues in Liquefied Petroleum (LP) Gases, **05.01**

D 2159 Discontinued 1998; Test Method for Naphthenes in Saturates Fractions by Refractivity Intercept

D 2160 Discontinued 1997; Test Method for Thermal Stability of Hydraulic Fluids

D 2162–93(1998) Test Method for Basic Calibration of Master Viscometers and Viscosity Oil Standards, **05.01**

D 2163–91(1996) Test Method for Analysis of Liquefied Petroleum (LP) Gases and Propene Concentrates by Gas Chromatography, **05.01**

D 2164–83(1994)$^{\varepsilon 1}$ Methods of Testing Structural Insulating Roof Deck, **04.10**

D 2165–94 Test Method for pH of Aqueous Extracts of Wool and Similar Animal Fibers, **07.01**

D 2166–98a Test Method for Unconfined Compressive Strength of Cohesive Soil, **04.08**

D 2167–94 Test Method for Density and Unit Weight of Soil in Place by the Rubber Balloon Method, **04.08**

D 2168–90(1996)$^{\varepsilon 1}$ Test Methods for Calibration of Laboratory Mechanical-Rammer Soil Compactors, **04.08**

D 2169 Discontinued 1975; Method of Test for Odor in Casein

D 2170–95 Test Method for Kinematic Viscosity of Asphalts (Bitumens), **04.03**

D 2171–94 Test Method for Viscosity of Asphalts by Vacuum Capillary Viscometer, **04.03**

D 2172–95 Test Methods for Quantitative Extraction of Bitumen From Bituminous Paving Mixtures, **04.03**

D 2173 Discontinued 1984; Method of Test for Arsenic in Paper and Paperboard

D 2174 Discontinued 1972; Method of Test for Tensile Energy Absorption of Paper

D 2175–97 Test Method for Book Bulk and Book Bulking Number of Paper, **15.09**

D 2176–97a Test Method for Folding Endurance of Paper by the M.I.T. Tester, **15.09**

D 2177–87(1994) Test Method for Ink Absorption of Blotting Paper, **15.09**

D 2178–97a Specification for Asphalt Glass Felt Used in Roofing and Waterproofing, **04.04**

D 2179–65(1995) Specification for Combination Bar Soap, **15.04**

D 2180–89(1995)$^{\varepsilon 1}$ Test Method for Active Oxygen in Bleaching Compounds, **15.04**

D 2181 Discontinued 1969; Specification for Vinyl Acetate Resin Emulsion Adhesive

D 2182 Discontinued 1984; Method of Test for Strength Properties of Metal-to-Metal Adhesives by Compression Loading (Disk Shear)

D 2183 Discontinued 1991; Test Method for Flow Properties of Adhesives

D 2184 Discontinued 1987; Method of Testing Deuterium Oxide

D 2185 Discontinued 1970; Method of Test for Radioactive Cobalt in Industrial Water and Industrial Waste Water

D 2186–84(1995)$^{\varepsilon 1}$ Test Methods for Deposit-Forming Impurities in Steam, **11.02**

D 2187–94 Test Methods for Physical and Chemical Properties of Particulate Ion-Exchange Resins, **11.02**

D 2188 Discontinued 1984; Recommended Practice for Statistical Design in Interlaboratory Testing of Plastics; Replaced by E 691

D 2189 Discontinued 1975; Specification for Acetaldehyde

D 2190–97 Specification for Vinyl Acetate, **06.04**

D 2191–97 Test Method for Acetaldehyde Content of Vinyl Acetate, **06.04**

D 2192–96 Test Method for Purity of Aldehydes and Ketones, **06.04**

D 2193–97 Test Method for Hydroquinone in Vinyl Acetate, **06.04**

D 2194–93 Test Method for Concentration of Formaldehyde Solutions, **06.04**

D 2195–95 Test Methods for Pentaerythritol, **06.04**

D 2196–86(1991)$^{\varepsilon 1}$ Test Methods for Rheological Properties of Non-Newtonian Materials by Rotational (Brookfield) Viscometer, **06.01**

D 2197–98 Test Methods for Adhesion of Organic Coatings by Scrape Adhesion, **06.01**

D 2198–84(1996)$^{\varepsilon 1}$ Test Method for Stain Removal from Multicolor Lacquers, **06.02**

D 2199–82(1995)$^{\varepsilon 1}$ Method for Measurement of Plasticizer Migration from Vinyl Fabrics to Lacquers, **06.02**

D 2200–95 Pictorial Surface Preparation Standards for Painting Steel Surfaces, **06.02**

D 2201–92 Practice for Preparation of Zinc-Coated and Zinc-Alloy-Coated Steel Panels for Testing Paint and Related Coating Products, **06.01**

D 2202–93a Test Method for Slump of Sealants, **04.07**

D 2203–93 Test Method for Staining from Sealants, **04.07**

D 2204 Discontinued 1976; Method of Test for Perspiration Resistance of Organic Coatings

D 2205–85(1994)$^{\varepsilon 1}$ Guide for Selection of Tests for Traffic Paints, **06.02**

D 2206 Discontinued 1980; Test Method for Low Quantities of Mercury in Paint; Replaced by D 3624

D 2207–95 Test Method for Bursting Strength of Leather by the Ball Method, **15.04**

D 2208–95 Test Method for Breaking Strength of Leather by the Grab Method, **15.04**

D 2209–95 Test Method for Tensile Strength of Leather, **15.04**

D 2210–93(1997) Test Method for Grain Crack and Extension of Leather by the Mullen Test, **15.04**

D 2211–94 Test Method for Elongation of Leather, **15.04**

D 2212–94$^{\varepsilon 1}$ Test Method for Slit Tear Resistance of Leather, **15.04**

D 2213–70(1998) Test Method for Compressibility of Leather, **15.04**

D 2214–70(1997) Test Method for Estimating the Thermal Conductivity of Leather with the Cenco-Fitch Apparatus, **15.04**

D 2215 Discontinued 1975; Method of Test for Total Fat in Casein and Isolated Soy Protein

D 2216–98 Test Method for Laboratory Determination of Water (Moisture) Content of Soil and Rock, **04.08**

D 2217–85(1998) Practice for Wet Preparation of Soil Samples for Particle-Size Analysis and Determination of Soil Constants, **04.08**

D 2218–67(1996)$^{\varepsilon 1}$ Specification for Molybdate Orange Pigments, **06.03**

D 2219–97 Specification for Poly(Vinyl Chloride) Insulation for Wire and Cable, 60°C Operation, **10.01**

D 2220–97 Specification for Poly(Vinyl Chloride) Insulation for Wire and Cable, 75°C Operation, **10.01**

D 2221–94 Test Method for Creep Properties of Package Cushioning Materials, **15.09**

D 2222–94 Test Method for Methanol Extract of Vinyl Chloride Resins, **08.01**

D 2223 Discontinued 1993; Test Method for Oxygen Impurity in Nitrogen (Electrochemical Method)

D 2224 Discontinued 1989; Test Method for Mean Molecular Weight of Mineral Insulating Oils by the Cryoscopic Method

D 2225–92(1997) Test Methods for Silicone Fluids Used for Electrical Insulation, **10.03**

D 2226–93(1998) Classification for Various Types of Petroleum Oils for Rubber Compounding Use, **09.01**

D 2227–96 Specification for Natural Rubber (NR) Technical Grades, **09.01**

D 2228–88(1994)$^{\varepsilon 1}$ Test Method for Rubber Property—Abrasion Resistance (Pico Abrader), **09.01**

D 2229–98 Test Method for Adhesion Between Steel Tire Cords and Rubber, **07.01**

D 2230–96 Test Method for Rubber Property—Extrudability of Unvulcanized Compounds, **09.01**

D 2231 Discontinued 1998; Practice for Rubber Properties in Forced Vibration; Replaced by D 5992

D 2232 Discontinued 1995; Test Method for Evaporation Residue of Naphthalene

D 2233–86(1997) Specification for Chlorinated Aromatic Hydrocarbons (Askarels) for Capacitors, **10.03**

D 2234–98 Test Methods for Collection of a Gross Sample of Coal, **05.05**

D 2235–96a Specification for Solvent Cement for Acrylonitrile-Butadiene-Styrene (ABS) Plastic Pipe and Fittings, **08.04**

D 2236 Discontinued 1985; Method of Test for Dynamic Mechanical Properties of Plastics by Means of a Torsional Pendulum; Replaced by D 4065

D 2237 Discontinued 1989; Method of Test for Rate-of-Rise (Volume Increase)

D 2536 Redesignated F 305
D 2537 Redesignated F 306
D 2538–95 Practice for Fusion of Poly(Vinyl Chloride) (PVC) Resins Using a Torque Rheometer, **08.02**
D 2539–93 Test Method for Shock Sensitivity of Liquid Monopropellants by the Card-Gap Test, **15.03**
D 2540–93 Test Method for Drop-Weight Sensitivity of Liquid Monopropellants, **15.03**
D 2541–93 Test Method for Critical Diameter and Detonation Velocity of Liquid Monopropellants, **15.03**
D 2542 Redesignated F 309
D 2543 Redesignated F 310
D 2544 Redesignated F 307
D 2545 Redesignated F 308
D 2546 Redesignated F 315
D 2547 Discontinued 1991; Test Method for Lead in Gasoline
D 2548 Discontinued 1979; Method of Test for Analysis of Oil Soluble Petroleum Sulfonates by Liquid Chromatography; Replaced by D 3712
D 2549–91(1995) Test Method for Separation of Representative Aromatics and Nonaromatics Fractions of High-Boiling Oils by Elution Chromatography, **05.01**
D 2550 Discontinued 1991; Test Method for Water Separation Characteristics of Aviation Turbine Fuels
D 2551 Discontinued 1989; Test Method for Vapor Pressure of Petroleum Products
D 2552 Discontinued 1987; Method of Test for Environmental Stress Rupture of Type III Polyethylenes Under Constant Tensile Load
D 2553 Discontinued 1992; Test Method for Detecting Odor of Drycleaning Detergent on a Drycleaned Garment
D 2554 Discontinued 1992; Test Method for Flash Point of Drycleaning Detergents in the Drycleaning Bath
D 2555–98 Test Methods for Establishing Clear Wood Strength Values, **04.10**
D 2556–93a(1997) Test Method for Apparent Viscosity of Adhesives Having Shear-Rate-Dependent Flow Properties, **15.06**
D 2557–98 Test Method for Tensile-Shear Strength of Adhesives in the Subzero Temperature Range from −267.8 to −55°C (−450 to −67°F), **15.06**
D 2558 Discontinued 1992; Test Method for Evaluating Peel Strength of Shoe Sole-Attaching Adhesives
D 2559–97a Specification for Adhesives for Structural Laminated Wood Products for Use Under Exterior (Wet Use) Exposure Conditions, **15.06**
D 2560 Discontinued 1987; Specification for Solvent Cements for Cellulose Acetate Butyrate (CAB) Plastic Pipe, Tubing, and Fittings
D 2561–95 Test Method for Environmental Stress-Crack Resistance of Blow-Molded Polyethylene Containers, **08.02**
D 2562–94 Practice for Classifying Visual Defects in Parts Molded from Reinforced Thermosetting Plastics, **08.02**
D 2563–94 Practice for Classifying Visual Defects in Glass-Reinforced Plastic Laminate Parts, **08.02**
D 2564–96a Specification for Solvent Cements for Poly(Vinyl Chloride) (PVC) Plastic Piping Systems, **08.04**
D 2565–99 Practice for Operating Xenon Arc-Type Light-Exposure Apparatus With and Without Water for Exposure of Plastics, **08.02**
D 2566 Discontinued 1993; Test Method for Linear Shrinkage of Cured Thermosetting Casting Resins During Cure
D 2567 Discontinued 1984; Molecular Distribution Analysis for Monoalkylbenzenes by Mass Spectrometry
D 2568 Discontinued 1980; Recommended Practice for Calculation of Absorbed Dose from Gamma Radiation; Replaced by E 665
D 2569–97 Test Method for Distillation of Pitch, **05.01**
D 2570–96 Test Method for Simulated Service Corrosion Testing of Engine Coolants, **15.05**
D 2571–95 Guide for Testing Wood Furniture Lacquers, **06.02**
D 2572–97 Test Method for Isocyanate Groups in Urethane Materials or Prepolymers, **06.03**
D 2573–94 Test Method for Field Vane Shear Test in Cohesive Soil, **04.08**
D 2574–97 Test Method for Resistance of Emulsion Paints in the Container to Attack by Microorganisms, **06.01**
D 2575–70(1991)$^{\epsilon 1}$ Method for Testing Polymerized Fatty Acids, **06.03**
D 2576 Discontinued 1981; Method of Test for Metals in Water and Waste Water by Atomic Absorption Spectrophotometry
D 2577 Discontinued 1989; Test Method for Radioactive Cesium in Water
D 2578–94 Test Method for Wetting Tension of Polyethylene and Polypropylene Films, **08.02**
D 2579–93$^{\epsilon 1}$ Test Methods for Total and Organic Carbon in Water, **11.02**
D 2580–94 Test Method for Phenols in Water by Gas-Liquid Chromatography, **11.02**
D 2581–96 Specification for Polybutylene (PB) Plastics Molding and Extrusion Materials, **08.02**
D 2582–93 Test Method for Puncture-Propagation Tear Resistance of Plastic Film and Thin Sheeting, **08.02**
D 2583–95 Test Method for Indentation Hardness of Rigid Plastics by Means of a Barcol Impressor, **08.02**
D 2584–94 Test Method for Ignition Loss of Cured Reinforced Resins, **08.02**
D 2585 Discontinued 1996; Test Method for Preparation and Tension Testing of Filament-Wound Pressure Vesseis
D 2586 Discontinued 1996; Test Method for Hydrostatic Compressive Strength of Glass-Reinforced Plastic Cylinders
D 2587 Discontinued 1990; Test Method for Acetone Extraction and Ignition of Glass Fiber Strands
D 2588 Discontinued 1972; Method of Test for Standard Plate Count of Casein and Isolated Soy Protein
D 2589–88(1997) Test Method for McNett Wet Classification of Asbestos Fiber, **04.05**
D 2590–98 Test Method for Sampling Chrysotile Asbestos, **04.05**
D 2591 Discontinued 1980; Method of Test for Linear Density of Elastomeric Yarn
D 2592 Discontinued 1972; Method of Test for Sieve Analysis of Casein and Isolated Soy Protein
D 2593–93(1998) Test Method for Butadiene Purity and Hydrocarbon Impurities by Gas Chromatography, **05.01**
D 2595–96 Test Method for Evaporation Loss of Lubricating Greases Over Wide Temperature Range, **05.01**
D 2596–97 Test Method for Measurement of Extreme-Pressure Properties of Lubricating Grease (Four-Ball Method), **05.01**
D 2597–94 Test Method for Analysis of Demethanized Hydrocarbon Liquid Mixtures Containing Nitrogen and Carbon Dioxide by Gas Chromatography, **05.02**
D 2598–96 Practice for Calculation of Certain Physical Properties of Liquefied Petroleum (LP) Gases from Compositional Analysis, **05.02**
D 2599 Discontinued 1993; Methods of Test for Lead in Gasoline by X-ray Spectrometry
D 2600 Discontinued 1992; Test Method for Aromatic Traces in Light Saturated Hydrocarbons by Gas Chromatography; Replaced by D 4420
D 2601 Discontinued 1985; Test Method for Hydrocarbon Types in Propylene Tetramer by Low Ionizing Voltage Mass Spectrometry
D 2602 Discontinued 1993; Apparent Viscosity of Engine Oils at Low Temperature Using the Cold-Cranking Simulator; Replaced by D 5293
D 2603–91 Test Method for Sonic Shear Stability of Polymer-Containing Oils, **05.02**
D 2604–86(1997)$^{\epsilon 1}$ Specification for High-Boiling Hydrocarbon Solvent for Preparing Oil-Borne Preservative Solutions, **04.10**
D 2605 Discontinued 1993; Specification for Volatile Petroleum Solvent (LPG) for Preparing Pentachlorophenol Solutions
D 2606–94 Test Method for Solubility of Pentachlorophenol in Heavy Hydrocarbon Solvents, **04.10**
D 2607 Discontinued 1992; Classification of Peats, Mosses, Humus, and Related Products
D 2608 Discontinued 1990; Test Method for Copper in Electrical Insulating Oils by Photometric Analysis
D 2610 Discontinued 1979; Specification for Butt Fusion Polyethylene (PE) Plastic Pipe Fittings, Schedule 40; Replaced by D 3261
D 2611 Discontinued 1979; Specification for Butt Fusion Polyethylene (PE) Plastic Pipe Fittings, Schedule 80; Replaced by D 3261
D 2612–99 Test Method for Fiber Cohesion in Sliver and Top in Static Tests, **07.01**
D 2613–85(1994)$^{\epsilon 1}$ Test Method for Calcium or Zinc in Paint Driers by EDTA Method, **06.01**
D 2614 Discontinued 1971; Method of Test for Giding Poer of Chromatic Paints; Replaced by D 2805
D 2615 Discontinued 1981; Method of Test for Free Yoluene Diisocyanate in Urethane Polymers by Distillation; Replaced by D 3432
D 2616–96 Test Method for Evaluation of Visual Color Difference with a Gray Scale, **06.01**
D 2617–96 Test Method for Total Ash in Leather, **15.04**
D 2618 Discontinued 1984; Method of Test for Pressure Blocking and Picking Points of Petroleum Wax
D 2619–95 Test Method for Hydrolytic Stability of Hydraulic Fluids (Beverage Bottle Method), **05.02**
D 2620–87(1995)$^{\epsilon 1}$ Test Method for Light Stability of Clear Coatings, **06.02**
D 2621–87(1995)$^{\epsilon 1}$ Test Method for Infrared Identification of Vehicle Solids from Solvent-Reducible Paints, **06.01**
D 2622–98 Test Method for Sulfur in Petroleum Products by X-Ray Spectrometry, **05.02**
D 2623 Discontinued 1991; Test Method for Knock Characteristics of Liquified Petroleum (LP) Gases by the Motor (LP) Method
D 2624–98 Test Methods for Electrical Conductivity of Aviation And Distillate Fuels, **05.02**
D 2625–94$^{\epsilon 1}$ Test Method for Endurance (Wear) Life and Load-Carrying Capacity of Solid Film Lubricants (Falex Pin and Vee Method), **05.02**
D 2626–97b Specification for Asphalt-Saturated and Coated Organic Felt Base Sheet Used in Roofing, **04.04**
D 2627–97 Specification for Diacetone Alcohol, **06.04**
D 2628–91(1998) Specification for Preformed Polychloroprene Elastomeric Joint Seals for Concrete Pavements, **04.03**
D 2629 Discontinued 1977; Specification for Hot Mixed, Hot Laid Emulsified Asphalt Paving Mixtures; Replaced by D 3515
D 2630 Discontinued 1990; Test Method for Rubber Property—Adhesion to Fabrics (Strap Peel Test); Replaced by D 4393, D 4776, D 4777
D 2631 Discontinued 1985; Methods for Testing Paper by Direct-Voltage Life Testing of Capacitors
D 2632–96 Test Method for Rubber Property—Resilience by Vertical Rebound, **09.01**
D 2633–96 Test Methods for Thermoplastic Insulations and Jackets for Wire and Cable, **10.02**
D 2634–86(1998) Specification for Methyl Amyl Acetate, **06.04**
D 2635–91(1996)$^{\epsilon 1}$ Specification for Methyl Isobutyl Carbinol, **06.04**
D 2636–91(1996) Specification for Hexylene Glycol, **06.04**

D 2736 Discontinued 1985; Practice for Determination of Hydrostatic CompreSsive strength of Syntactic Foam
D 2737–96a Specification for Polyethylene (PE) Plastic Tubing, **08.04**
D 2738 Discontinued 1982; Test Method for Bursting Strength of Corrugated and Solid Fiberboard; Replaced by TAPPI T 810
D 2739–97 Test Method for Volume Resistivity of Conductive Adhesives, **15.06**
D 2740 Discontinued 1991; Specification for Poly(Vinyl Chloride)(PVC) Plastic Tubing
D 2741–95 Test Method for Susceptibility of Polyethylene Bottles to Soot Accumulation, **08.02**
D 2742 Discontinued 1990; Methods for Chemical Analysis of Tribasis Lead Phosphosilicate
D 2743–68(1993)$^{\epsilon 1}$ Practices for Uniformity of Traffic Paint Vehicle Solids by Spectroscopy and Gas Chromatography, **06.02**
D 2744 Discontinued 1987; Specification for Tribasic Lead Phosphosilicate
D 2745–93 Test Method for Relative Tinting Strength of White Pigments by Reflectance Measurements, **06.01**
D 2746–97 Test Method for Staining Tendency of Asphalt (Stain Index), **04.04**
D 2747 Discontinued 1986; Method of Test for Trace Quantities of Total Sulfur in Volatile Organic Liquids (Oxy-Hydrogen Combustion Method)
D 2748 Discontinued 1987; Method of Test for Pyridine Bases in Tar Acids; Replaced by D 4471
D 2749–92 Symbols for Dimensions of Plastic Pipe Fittings, **08.04**
D 2750 Discontinued 1997; Specification for Acrylonitrile-Butadiene-Styrene (ABS) Plastics Utilities Conduit and Fittings
D 2751–96a Specification for Acrylonitrile-Butadiene-Styrene (ABS) Sewer Pipe and Fittings, **08.04**
D 2752–88(1997) Test Methods for Air Permeability of Asbestos Fibers, **04.05**
D 2753 Discontinued 1993; Specification for Electrolytic Capacitor Paper
D 2754–89(1993)$^{\epsilon 1}$ Specification for High-Temperature Glass Cloth Pressure-Sensitive Electrical Tape, **10.02**
D 2755–90(1997)$^{\epsilon 1}$ Test Method for Sampling and Reduction to Test Weight of Electrical Grade Magnesium Oxide, **10.02**
D 2756–85(1998) Test Method for Weight Loss of Electrical Insulating Varnishes, **10.02**
D 2757–86(1994)$^{\epsilon 1}$ Specification for Impervious Steatite Ceramics for Electrical and Electronic Applications, **15.02**
D 2758–94(1998)$^{\epsilon 1}$ Test Method for Engine Coolants by Engine Dynamometer, **15.05**
D 2760–70(1997) Test Method for Analysis of Sodium Triphosphate by the Simplified Paper Chromatographic Method, **15.04**
D 2761–89(1998) Test Method for Analysis of Sodium Triphosphate by the Simplified Ion Exchange Method, **15.04**
D 2762 Discontinued 1992; Specification for Drycleaning Detergent, Non-Charge Type
D 2763 Discontinued 1993; Specification for Drycleaning Detergent, Liquid Charge Type
D 2764–97 Test Method for Dimethylformamide-Insoluble (DMF-I) Content of Tar and Pitch, **05.02**
D 2765–95 Test Methods for Determination of Gel Content and Swell Ratio of Crosslinked Ethylene Plastics, **08.02**
D 2766–95 Test Method for Specific Heat of Liquids and Solids, **05.02**
D 2767 Redesignated F 317
D 2768–95 Specification for General-Purpose Ethylene-Propylene Rubber Jacket for Wire and Cable, **10.02**
D 2769 Discontinued 1987; Method of Testing Rubber Hose Used for Liquefied Petroleum Gas Extractable Material
D 2770–93 Specification for Ozone-Resisting Ethylene-Propylene Rubber Integral Insulation and Jacket for Wire and Cable, **10.02**
D 2771–90(1997)$^{\epsilon 1}$ Test Methods for Compaction Density of Electrical Grade Magnesium Oxide, **10.02**
D 2772–90(1997)$^{\epsilon 1}$ Test Method for Sieve Analysis of Electrical Grade Magnesium Oxide, **10.02**
D 2773–94 Test Method for Loss on Ignition of Electrical Grade Magnesium Oxide, **10.02**
D 2774–94 Practice for Underground Installation of Thermoplastic Pressure Piping, **08.04**
D 2775 Discontinued 1975; Method of Test for Insolubles in Casein
D 2776 Discontinued 1991; Test Methods for Corrosivity of Water in the Absence of Heat Transfer (Electrical Methods); Replaced by G 96
D 2777–98 Practice for Determination of Precision and Bias of Applicable Test Methods of Committee D-19 on Water, **11.01**
D 2778 Discontinued 1982; Method of Test for Solvent Extraction of Organic Matter from Water
D 2779–92(1997) Test Method for Estimation of Solubility of Gases in Petroleum Liquids, **05.02**
D 2780–92(1997) Test Method for Solubility of Fixed Gases in Liquids, **05.02**
D 2781 Discontinued 1992; Test Method for Compatibility of Fuel Oil Blends by Spot Test; Replaced by D 4740
D 2782–94(1996) Test Method for Measurement of Extreme-Pressure Properties of Lubricating Fluids (Timken Method), **05.02**
D 2783–88(1998) Test Method for Measurement of Extreme-Pressure Properties of Lubricating Fluids (Four-Ball Method), **05.02**
D 2784–98a Test Method for Sulfur in Liquefied Petroleum Gases (Oxy-Hydrogen Burner or Lamp), **05.02**
D 2785 Discontinued 1989; Test Method for Trace Quantities of Total Sulfur (Wickbold and Beckman Combustion Apparatus)
D 2786–91(1996) Test Method for Hydrocarbon Types Analysis of Gas-Oil Saturates Fractions by High Ionizing Voltage Mass Spectrometry, **05.02**
D 2787 Discontinued 1985; Method of Test for Lead and Vanadium in Gas Turbine Fuels
D 2788 Discontinued 1994; Method of Test for Trace Metals in Gas Turbine Fuels (Atomic Absorption Method)
D 2789–95 Test Method for Hydrocarbon Types in Low Olefinic Gasoline by Mass Spectrometry, **05.02**
D 2790 Discontinued 1993; Methods of Analysis of Solvent Systems Used for Removal of Water-Formed Deposits
D 2791–93(1997) Test Methods for Continuous Determination of Sodium in Water, **11.01**
D 2792–69(1993)$^{\epsilon 1}$ Test Method for Solvent and Fuel Resistance of Traffic Paint, **06.02**
D 2793–93a Test Method for Block Resistance of Organic Coatings on Wood Panel Substrates, **06.02**
D 2794–93 Test Method for Resistance of Organic Coatings to the Effects of Rapid Deformation (Impact), **06.01**
D 2795–95 Test Method for Analysis of Coal and Coke Ash, **05.05**
D 2796 Discontinued 1995; Terminology Relating to Megascopic Description of Coal and Coal Seams and Microscopical Description and Analysis of Coal
D 2797–85(1994) Practice for Preparing Coal Samples for Microscopal Analysis by Reflected Light, **05.05**
D 2798–97 Test Method for Microscopical Determination of the Reflectance of Vitrinite in a Polished Specimen of Coal, **05.05**
D 2799–98a Test Method for Microscopical Determination of Volume Percent of Physical Components of Coal, **05.05**
D 2800–92 Test Method for Preparation of Methyl Esters from Oils for Determination of Fatty Acid Composition by Gas Chromatography, **06.03**
D 2801 Discontinued 1990; Test Method for Leveling Characteristics of Paints by Draw-Down Method
D 2802–97 Specification for Ozone-Resistant Ethylene-Propylene Rubber Insulation for Wire and Cable, **10.02**
D 2803–93 Guide for Testing Filiform Corrosion Resistance of Organic Coatings on Metal, **06.01**
D 2804–98 Test Method for Purity of Methyl Ethyl Ketone by Gas Chromatography, **06.04**
D 2805–96a Test Method for Hiding Power of Paints by Reflectometry, **06.01**
D 2806 Discontinued 1982; Test Method for Flat Crush of Corrugating Medium; Replaced by TAPPI T 810
D 2807–93(1998) Test Method for Chromic Oxide in Leather (Perchloric Acid Oxidation), **15.04**
D 2808 Discontinued 1991; Test Method for Compressive Strength of Corrugated Fiberboard (Short Column Test)
D 2809–94 Test Method for Cavitation Corrosion and Erosion-Corrosion Characteristics of Aluminum Pumps With Engine Coolants, **15.05**
D 2810–72(1996) Test Method for pH of Leather, **15.04**
D 2811 Discontinued 1991; Methods for Spinning Tests on the Cotton System for Measurement of Spinning Performance
D 2812–95 Test Method for Non-Lint Content of Cotton, **07.01**
D 2813–97 Practice for Sampling Leather for Physical and Chemical Tests, **15.04**
D 2814 Discontinued 1978; Method of Test for Color Change Due to Flat Abrasion (Frosting)
D 2815 Discontinued 1976; Specification for Cleaning Compound, General Purpose
D 2816–95 Test Method for Cashmere Coarse-Hair Content in Cashmere, **07.01**
D 2817–91(1995) Specification for Maximum Cashmere Coarse-Hair Content in Cashmere, **07.01**
D 2818 Discontinued 1992; Specification for Homogeneous Bituminized Fiber Pipe for Airport and Highway Drainage
D 2819 Discontinued 1984; Specification for Extra-Heavy-Duty Black Polychloroprene Jacket for Wire and Cable; Replaced by D 4247
D 2820 Discontinued 1993; Test Method for C_1 Through C_5 Hydrocarbons in the Atmosphere By Gas Chromatography
D 2821–79(1998)$^{\epsilon 1}$ Test Method for Measuring the Relative Stiffness of Leather by Means of a Torsional Wire Apparatus, **15.04**
D 2822–91(1997)$^{\epsilon 1}$ Specification for Asphalt Roof Cement, **04.04**
D 2823–90(1997)$^{\epsilon 1}$ Specification for Asphalt Roof Coatings, **04.04**
D 2824–94 Specification for Aluminum-Pigmented Asphalt Roof Coatings, Non-Fibered, Asbestos Fibered, and Fibered without Asbestos, **04.04**
D 2825–96 Terminology Relating to Polishes and Related Materials, **15.04**
D 2826 Discontinued 1979; Specification for Styrene Monomer 993
D 2827–95 Specification for Styrene Monomer, **06.04**
D 2828–96 Specification for Nonbituminous Inserts for Contraction Joints in Portland Cement Concrete Airfield Pavements, **04.03**
D 2829–97 Practice for Sampling and Analysis of Built-Up Roofs, **04.04**
D 2830–96 Test Method for Exterior Durability of Factory-Primed Wood Products, **06.02**
D 2831 Discontinued 1981; Method of Test for Evaluating the Ability of a Latex Paint to Resist Efflorescence from the Substrate
D 2832–92(1994) Guide for Determining Volatile and Nonvolatile Content of Paint and Related Coatings, **06.01**
D 2834–95 Test Method for Nonvolatile Matter (Total Solids) in Water-Emulsion Floor Polishes, Solvent-Based Floor Polishes, and Polymer-Emulsion Floor Polishes, **15.04**
D 2835–89(1998) Specification for Lubricant for Installation of Preformed Compression Seals in Concrete Pavements, **04.03**

Changes of Textile Fabrics: Brush Pilling Tester, **07.02**
D 3512–99 Test Method for Pilling Resistance and Other Related Surface Changes of Textile Fabrics: Random Tumble Pilling Tester, **07.02**
D 3513–96 Test Method for Overlength Fiber Content of Man-Made Staple Fiber, **07.02**
D 3514–96 Test Method for Pilling Resistance and Other Related Surface Changes of Textile Fabrics: Elastomeric Pad Method, **07.02**
D 3515–96 Specification for Hot-Mixed, Hot-Laid Bituminous Paving Mixtures, **04.03**
D 3516–89(1995)$^{\epsilon 1}$ Test Methods for Ashing Cellulose, **06.03**
D 3517–96 Specification for "Fiberglass" (Glass-Fiber-Reinforced Thermosetting-Resin) Pressure Pipe, **08.04**
D 3518/D3518M–94$^{\epsilon 1}$ Practice for In-Plane Shear Stress-Strain Response of Unidirectional Polymer Matrix Composite Materials by Tensile Test of ±45° Laminate, **15.03**
D 3519–88(1997) Test Method for Foam in Aqueous Media (Blender Test), **05.02**
D 3520–88(1993)$^{\epsilon 1}$ Test Method for Quenching Time of Heat Treating Fluids (Magnetic Quenchometer Method), **05.02**
D 3521–86(1997) Test Method for Surface Wax Coating on Corrugated Board, **05.02**
D 3522–86(1997) Test Method for Applied Coating Wax and Impregnating (Saturating) Wax in Corrugated Board Facing, **05.02**
D 3523–92(1997) Test Method for Spontaneous Heating Values of Liquids and Solids (Differential Mackey Test), **05.02**
D 3524–90(1994) Test Method for Diesel Fuel Diluent in Used Diesel Engine Oils by Gas Chromatography, **05.02**
D 3525–93(1997) Test Method for Gasoline Diluent in Used Gasoline Engine Oils by Gas Chromatography, **05.02**
D 3526 Not yet assigned
D 3527–95 Test Method for Life Performance of Automotive Wheel Bearing Grease, **05.02**
D 3528–96 Test Method for Strength Properties of Double Lap Shear Adhesive Joints by Tension Loading, **15.06**
D 3529/D3529M–97 Test Method for Resin Solids Content of Epoxy-Matrix Prepreg by Matrix Dissolution, **15.03**
D 3530/D3530M–97 Test Method for Volatiles Content of Epoxy Matrix Prepreg, **15.03**
D 3531–76(1995) Test Method for Resin Flow of Carbon Fiber-Epoxy Prepreg, **15.03**
D 3532–76(1995) Test Method for Gel Time of Carbon Fiber-Epoxy Prepreg, **15.03**
D 3533–90(1995)$^{\epsilon 1}$ Method of Testing Rubber— Nitrogen Content, **09.01**
D 3534–85(1995)$^{\epsilon 1}$ Test Method for Polychlorinated Biphenyls (PCBs) in Water, **11.02**
D 3535–92(1996) Test Method for Resistance to Deformation Under Static Loading for Structural Wood Laminating Adhesives Used Under Exterior (Wet Use) Exposure Conditions, **15.06**
D 3536 Discontinued 1996; Test Method for Molecular Weight Averages and Molecular Weight Distribution of Polystyrene by Liquid Exclusion Chromatography (Gel Permeation Chromatography—GPC); Replaced by D 5296
D 3537 Discontinued 1985; Test Method for Tensile Adhesion of Spray-Applied Rigid Urethane Foam in the Field
D 3538 Discontinued 1981; Recommended Practices for Sampling and Handling Cresylic Acid; Replaced by D 3852
D 3539–87(1996) Test Methods for Evaporation Rates of Volatile Liquids by Shell Thin-Film Evaporometer, **06.01**
D 3540–90(1998) Specification for Primary Amyl Acetate, Synthetic (98 % Grade), **06.04**
D 3541–91(1996)$^{\epsilon 1}$ Specification for 2-Ethylhexyl Acrylate, **06.04**
D 3542–92(1998) Specification for Preformed Polychloroprene Elastomeric Joint Seals for Bridges, **04.03**
D 3543–93(1997) Test Method for Metal Glide Adhesion, **15.04**
D 3544–76(1996) Guide for Reporting Test Methods and Results on High Modulus Fibers, **15.03**
D 3545–95 Test Method for Alcohol Content and Purity of Acetate Esters by Gas Chromatography, **06.04**
D 3546–90(1994) Test Method for Formic Acid in Glacial Acetic Acid, **06.04**
D 3547–91(1996)$^{\epsilon 1}$ Specification for n–Butyl Acrylate, **06.04**
D 3548–93 Specification for Ethyl Acrylate, **06.04**
D 3549–93a Test Method for Thickness or Height of Compacted Bituminous Paving Mixture Specimens, **04.03**
D 3550–84(1995)$^{\epsilon 1}$ Practice for Ring-Lined Barrel Sampling of Soils, **04.08**
D 3551–90(1996)$^{\epsilon 1}$ Practice for Laboratory Preparation of Soil-Lime Mixtures Using a Mechanical Mixer, **04.08**
D 3552/D3552M–96 Test Method for Tensile Properties of Fiber-Reinforced Metal Matrix Composites, **15.03**
D 3553–76(1996) Test Method for Fiber Content by Digestion of Reinforced Metal Matrix Composites, **15.03**
D 3554–98 Specification for Track-Resistant Black Thermoplastic High-Density Polyethylene Insulation for Wire and Cable, **10.02**
D 3555–98 Specification for Track-Resistant Black Crosslinked Thermosetting Polyethylene Insulation for Wire and Cable, **10.02**
D 3556–85(1995) Test Method for Deposition on Glassware During Mechanical Dishwashing, **15.04**
D 3557–95 Test Methods for Cadmium in Water, **11.01**
D 3558–94 Test Methods for Cobalt in Water, **11.01**
D 3559–96 Test Method for Lead in Water, **11.01**
D 3560 Discontinued 1991; Test Method for Oxygen Demand in Water by Combustion-Infrared Analysis
D 3561–96 Test Method for Lithium, Potassium, and Sodium Ions in Brackish Water, Seawater, and Brines by Atomic Absorption Spectrophotometry, **11.02**
D 3562–95a Performance Specification for Men's and Boys' Woven Dress Topcoat and Dress Overcoat Fabrics, **07.02**
D 3563 Discontinued 1986; Test Method for Concentration and Particle Size Distribution of Particulate Collected in the Alundum Thimble Using a Liquid Media Electronic Counter
D 3564–95 Practice for Application of Floor Polishes to Maintain Vinyl Composition Tile or Flooring, **15.04**
D 3565–89(1996)$^{\epsilon 1}$ Test Method for Tableware Pattern Removal by Mechanical Dishwasher Detergents, **15.04**
D 3566–96 Practice for Rubber— Determination of Bromine in the Presence of Chlorine by Oxygen Combustion, **09.01**
D 3567–97 Practice for Determining Dimensions of"Fiberglass" (Glass-Fiber-Reinforced Thermosetting Resin) Pipe and Fittings, **08.04**
D 3568–98 Test Method for Rubber—Evaluation of EPDM (Ethylene Propylene Diene Terpolymers) Including Mixtures with Oil, **09.01**
D 3569–95 Specification for Joint-Sealant, Hot-Applied, Elastomeric, Jet-Fuel-Resistant-Type for Portland Cement Concrete Pavements, **04.03**
D 3570 Discontinued 1986; Test Method for Viscosity of Bituminous Materials With a Sliding Plate Microviscometer
D 3571–86(1991)$^{\epsilon 1}$ Consumer Product Specification for Household Laundry and Dishwasher Water Inlet Hose, **09.02**
D 3572 Discontinued 1997; Consumer Product Specification for Household Laundry and Dishwasher Drain Hose/
D 3573 Discontinued 1997; Consumer Product Specification for Sink Spray Hose
D 3574–95 Test Methods for Flexible Cellular Materials—Slab, Bonded, and Molded Urethane Foams, **08.02**
D 3575–93 Test Methods for Flexible Cellular Materials Made from Olefin Polymers, **08.02**
D 3576–98 Test Method for Cell Size of Rigid Cellular Plastics, **08.02**
D 3577–99 Specification for Rubber Surgical Gloves, **09.02**
D 3578–99 Specification for Rubber Examination Gloves, **09.02**
D 3579–77(1993)$^{\epsilon 1}$ Specification for Rubber Surgical Drainage Tubes, Penrose-Type, **09.02**
D 3580–95$^{\epsilon 1}$ Test Method for Vibration (Vertical Linear Motion) Test of Products, **15.09**
D 3581–96 Specification for Joint Sealant, Hot-Applied, Jet-Fuel-Resistant Type, for Portland Cement Concrete and Tar-Concrete Pavements, **04.03**
D 3582 Discontinued 1996; Test Methods for Joint Sealant, Hot-Poured, Jet-Fuel-Resistant Type, for Portland Cement Concrete and Tar-Concrete Pavements; Replaced by D 5329
D 3583 Discontinued 1995; Methods of Testing Joint Sealant, Hot-Applied, Elastomeric-Type, for Portland Cement Concrete Pavements, or Joint Sealant, Hot-Applied, Elastomeric, Jet-Fuel-Resistant-Type, for Portland Cement Concrete Pavements; Replaced by D 3569, D 5329
D 3584 Discontinued 1996; Practice for Indexing Papers and Reports on Soil and Rock for Engineering Purposes
D 3585–98 Specification for ASTM Reference Fluid for Coolant Tests, **15.05**
D 3586 Discontinued 1991; Test Method for Chromium in Workplace Atmospheres (Colorimetric Method)
D 3587 Discontinued 1981; Test Method for Tin (Inorganic) in Workplace Atmospheres (Colorimetric Method)
D 3588–98 Method for Calculating Calorific Value and Specific Gravity (Relative Density) of Gaseous Fuels, **05.05**
D 3589 Discontinued 1991; Test Method for Total Nitrogen in Water by Microcoulometry
D 3590–89(1994)$^{\epsilon 1}$ Test Methods for Total Kjeldahl Nitrogen in Water, **11.01**
D 3591–97 Practice for Determining Logarithmic Viscosity Number of Poly(Vinyl Chloride) (PVC) in Formulated Compounds, **08.02**
D 3592 Discontinued 1989; Recommended Practice for Determining Molecular Weight by Vapor Pressure Osmometry
D 3593 Discontinued 1993; Test Method for Molecular Weight Averages/ Distribution of Certain Polymers by Liquid Size-Exclusion Chromatography (Gel Permeation Chromatography GPC) Using Universal Calibration; Replaced by D 5296
D 3594–93 Test Method for Copolymerized Ethyl Acrylate in Ethylene-Ethyl Acrylate Copolymers, **08.02**
D 3595–97 Specification for Polychlorotrifluoroethylene (PCTFE) Extruded Plastic Sheet and Film, **08.02**
D 3596–92 Practice for Determination of Gels (Fisheyes) in General-Purpose Poly(Vinyl Chloride) (PVC) Resins, **08.02**
D 3597–95a Performance Specification for Woven Upholstery Fabrics—Plain, Tufted, or Flocked, **07.02**
D 3598–89(1995)$^{\epsilon 1}$ Test Method for Citrate in Synthetic Detergents, **15.04**
D 3599 Discontinued 1989; Test Method for Feltability of Wool
D 3600 Discontinued 1989; Performance Specification for Men's and Boy's Woven Rainwear and All-Purpose, Water-Repellent Coat Fabrics; Replaced by D 3779
D 3601–88(1997) Test Method for Foam in Aqueous Media (Bottle Test), **05.02**
D 3602 Discontinued 1994; Test Method for Water Separation Characteristics of Aviation Turbine Fuels; Replaced by D 3948
D 3603–93(1997) Test Method for Rust-Preventing Characteristics of Steam

D 4263–83(1993)$^{\epsilon 1}$ Test Method for Indicating Moisture in Concrete by The Plastic Sheet Method, **06.02**
D 4265–98 Guide for Evaluating Stain Removal Performance in Home Laundering, **15.04**
D 4266–96 Method for Precoat Capacity of Powdered Ion Exchange Resins, **11.02**
D 4267–95 Specification for Labels for Small-Volume (100 mL or Less) Parenteral Drug Containers, **15.09**
D 4268–93 Test Methods for Testing Fiber Ropes, **07.02**
D 4269 Discontinued 1992; Test Method for Shorn Pile Mass of Finished Tufted Pile Yarn Floor Covering
D 4270–95 Guide for Using Existing Practices in Developing and Writing Test Methods, **07.02**
D 4271–88(1994) Practice for Writing Statements on Sampling in Test Methods for Textiles, **07.02**
D 4272–96 Test Method for Total Energy Impact of Plastic Films by Dart Drop, **08.02**
D 4273–94 Test Method for Polyurethane Raw Materials: Determination of Primary Hydroxyl Content of Polyether Polyols, **08.02**
D 4274–94 Test Method for Testing Polyurethane Raw Materials: Determination of Hydroxyl Numbers of Polyols, **08.02**
D 4275–96 Test Method for Determination of Butylated Hydroxy Toluene (BHT) in Polymers of Ethylene and Ethylene—Vinyl Acetate (EVA) Copolymers by Gas Chromatography, **08.02**
D 4276–95 Practice for Confined Area Entry, **15.05**
D 4277–83(1998) Guide for Testing Amino Resins, **06.03**
D 4278–95 Test Method for Wet Ashing Procedure for Preparing Wood Samples for Inorganic Chemical Analysis, **04.10**
D 4279–95 Test Methods for Water Vapor Transmission of Shipping Containers—Constant and Cycle Methods, **15.09**
D 4280–96 Specification for Extended Life Type, Nonplowable, Prismatic, Raised, Retroreflective Pavement Markers, **04.03**
D 4281–95 Test Method for Oil and Grease (Fluorocarbon Extractable Substances) by Gravimetric Determination, **11.02**
D 4282–95 Test Method for Determination of Free Cyanide in Water and Wastewater by Microdiffusion, **11.02**
D 4283–98 Test Method for Viscosity of Silicone Fluids, **15.04**
D 4284–92 Test Method for Determining Pore Volume Distribution of Catalysts by Mercury Intrusion Porosimetry, **05.04**
D 4285–83(1993)$^{\epsilon 1}$ Test Method for Indicating Oil or Water in Compressed Air, **06.02**
D 4286–90(1996)$^{\epsilon 1}$ Practice for Determining Coating Contractor Qualifications for Nuclear Powered Electric Generation Facilities, **06.02**
D 4287–94 Test Method for High-Shear Viscosity Using the ICI Cone/Plate Viscometer, **06.01**
D 4288–83(1996)$^{\epsilon 1}$ Specification for Calcium Borosilicate Pigments, **06.03**
D 4289–97 Test Method for Compatibility of Lubricating Grease with Elastomers, **05.02**
D 4290–94 Test Method for Determining the Leakage Tendencies of Automotive Wheel Bearing Grease Under Accelerated Conditions, **05.02**
D 4291–93(1998) Test Method for Trace Ethylene Glycol in Used Engine Oil, **05.02**
D 4292–92(1997) Test Method for Vibrated Bulk Density of Calcined Petroleum Coke, **05.02**
D 4293–83(1993) Specification for Phosphate Ester Based Fluids for Turbine Lubrication, **05.02**
D 4294–98 Test Method for Sulfur in Petroleum Products by Energy-Dispersive X-Ray Fluorescence Spectroscopy, **05.02**
D 4295–89(1994) Classification for Rubber Compounding Materials—Zinc Oxide, **09.01**
D 4296–83(1994)$^{\epsilon 1}$ Practice for Sampling Pitch, **05.02**
D 4297–89(1994)$^{\epsilon 1}$ Practice for Sampling and Handling 4,4′–Isopropylidine Diphenol (Bisphenol-A), **06.04**
D 4298–95 Guide for Intercomparing Permeation Tubes to Establish Traceability, **11.03**
D 4299 Discontinued 1990; Test Methods for Effect of Bacterial Contamination on Permeance of Adhesive Preparations and Adhesives Films; Replaced by D 4300, D 4783
D 4300–98a Test Methods for Ability of Adhesive Films to Support or Resist the Growth of Fungi, **15.06**
D 4301–84(1996) Test Method for Total Chlorine in Epoxy Resins and Compounds, **06.03**
D 4302–98 Specification for Artists' Oil, Resin-Oil, and Alkyd Paints, **06.02**
D 4303–98 Test Methods for Lightfastness of Pigments Used in Artists' Paints, **06.02**
D 4304–93 Specification for Mineral Lubricating Oil Used in Steam or Gas Turbines, **05.02**
D 4305–98a Test Method for Filter Flow of Aviation Fuels at Low Temperatures, **05.02**
D 4306–97 Practice for Aviation Fuel Sample Containers for Tests Affected by Trace Contamination, **05.02**
D 4307–94 Practice for Preparation of Liquid Blends for Use as Analytical Standards, **05.02**
D 4308–95 Test Method for Electrical Conductivity of Liquid Hydrocarbons by Precision Meter, **05.02**
D 4309–96 Practice for Sample Digestion Using Closed Vessel Microwave Heating Technique for the Determination of Total Metals in Water, **11.01**
D 4310–98 Test Method for Determination of the Sludging and Corrosion Tendencies of Inhibited Mineral Oils, **05.02**
D 4311–96 Practice for Determining Asphalt Volume Correction to a Base Temperature, **04.03**
D 4312–95a Test Method for Toluene-Insoluble (TI) Content of Tar and Pitch (Short Method), **05.02**
D 4313–98 Specification for General-Purpose, Heavy-Duty, and Extra-Heavy-Duty Crosslinked Chlorinated Polyethylene (CM) Jackets for Wire and Cable, **10.02**
D 4314–95 Specification for General Purpose, Heavy-Duty, and Extra-Heavy-Duty Crosslinked Chlorosulfonated Polyethylene Jackets for Wire and Cable, **10.02**
D 4315–94 Test Methods for Rubber Compounding Material—Zinc Oxide, **09.01**
D 4316–95 Test Method for Elastomeric Water Bottles, **09.02**
D 4317–98 Specification for Polyvinyl Acetate-Based Emulsion Adhesives, **15.06**
D 4318–98 Test Method for Liquid Limit, Plastic Limit, and Plasticity Index of Soils, **04.08**
D 4319–93 Test Method for Distribution Ratios by the Short-Term Batch Method, **04.08**
D 4320–93 Test Method for Laboratory Preparation of Chemically Grouted Soil Specimens for Obtaining Design Strength Parameters, **04.08**
D 4321–95 Test Method for Package Yield of Plastic Film, **08.02**
D 4322–96 Test Method for Residual Acrylonitrile Monomer Styrene-Acrylonitrile Copolymers and Nitrile Rubber by Headspace Gas Chromatography, **08.02**
D 4323–84(1997)$^{\epsilon 1}$ Test Method for Hydrogen Sulfide in the Atmosphere by Rate of Change of Reflectance, **11.03**
D 4325–97 Test Methods for Nonmetallic Semi-Conducting and Electrically Insulating Rubber Tapes, **10.02**
D 4326–97 Test Method for Major and Minor Elements in Coal and Coke Ash by X-Ray Fluorescence, **05.05**
D 4327–97 Test Method for Anions in Water by Chemically-Suppressed Ion Chromatography, **11.01**
D 4328–97 Practice for Calculation of Supersaturation of Barium Sulfate, Strontium Sulfate, and Calcium Sulfate Dihydrate (Gypsum) in Brackish Water, Seawater, and Brines, **11.02**
D 4329–99 Practice for Operating Light and Water Apparatus (Fluorescent UV Condensation Type) for Exposure of Plastics, **08.03**
D 4330–94(1997) Practice for Evaluation of Fiberglas Boat Polish and Wax, **15.04**
D 4331 Discontinued 1989; Practice for Measuring Effectiveness of Dedusting Agents for Powdered Chemicals
D 4332–89(1994)$^{\epsilon 1}$ Practice for Conditioning Containers, Packages, or Packaging Components for Testing, **15.09**
D 4333 Discontinued 1995; Test Method for Resistance of Mechanical Pump Dispensers to Commercial Products
D 4334 Discontinued 1991; Method for Measurement of Dip Tube Retention of Mechanical Pump Dispensers
D 4335 Discontinued 1991; Test Method for Pump/Valve Component Pull-Off Procedure
D 4336 Discontinued 1995; Test Method for Determination of Output per Stroke of a Mechanical Pump Dispenser
D 4337–89(1995)$^{\epsilon 1}$ Test Methods for Analysis of Linear Detergent Alkylates, **15.04**
D 4338–97 Test Method for Flexibility Determination of Supported Adhesive Films by Mandrel Bend Test Method, **15.06**
D 4339–95 Test Method for Determination of the Odor of Adhesives, **15.06**
D 4340–96 Test Method for Corrosion of Cast Aluminum Alloys in Engine Coolants under Heat-Rejecting Conditions, **15.05**
D 4341–93 Test Method for Creep of Cylindrical Hard Rock Core Specimens in Uniaxial Compression, **04.08**
D 4342–84(1998) Practice for Collecting of Benthic Macroinvertebrates with Ponar Grab Sampler, **11.05**
D 4343–84(1998) Practice for Collecting Benthic Macroinvertebrates with Ekman Grab Sampler, **11.05**
D 4344–84(1998) Practice for Collecting Benthic Macroinvertebrates with Smith-McIntyre Grab Sampler, **11.05**
D 4345–84(1998) Practice for Collecting Benthic Macroinvertebrates with Van Veen Grab Sampler, **11.05**
D 4346–84(1997) Practice for Collecting Benthic Macroinvertebrates with Okean 50 Grab Sampler, **11.05**
D 4347–84(1995) Practice for Collecting Benthic Macroinvertebrates with Shipek (Scoop) Grab Sampler, **11.05**
D 4348–84(1995) Practice for Collecting Benthic Macroinvertebrates with Holme (Scoop) Grab Sampler, **11.05**
D 4349–96 Specification for Polyphenylene Ether (PPE) Materials, **08.03**
D 4350–95 Test Method for Corrositivity Index of Plastics and Fillers, **08.03**
D 4351 Discontinued 1992; Test Method for Measuring the Thermal Conductivity of Plastics by the Evaporation-Calorimetric Method
D 4352–90(1997)$^{\epsilon 1}$ Test Method for Determination of Magnetic Material Impurities in Electrical Grade Magnesium Oxide, **10.02**
D 4353 Discontinued 1995; Test Method for Basic Stability of a Mechanical Pump Dispenser and Product
D 4354–96 Practice for Sampling of Geosynthetics for Testing, **04.09**
D 4355–92 Test Method for Deterioration of Geotextiles from Exposure to Ultraviolet Light and Water (Xenon-Arc Type Apparatus), **04.09**
D 4356–84(1996) Practice for Establishing Consistent Test Method Tolerances, **14.02**
D 4357–96 Specification for Plastic Laminates Made from Woven-Roving and Woven-Yarn Glass Fabrics, **08.03**

D 4922–94$^{\varepsilon 1}$ Test Method for Determination of Radioactive Iron in Water, **11.02**
D 4923–92 Specification for Reinforced Thermosetting Plastic Poles, **08.03**
D 4924–89(1994) Classification for Petroleum Waxes for Use in Rubber Compounding, **09.01**
D 4925 Discontinued 1997; Test Method for Flexibility and Adhesion of Finish on Leather; Replaced by D 6182
D 4926–89(1994)$^{\varepsilon 1}$ Test Method for Gamma Alumina Content in Catalysts Containing Silica and Alumina by X-Ray Powder Diffraction, **05.04**
D 4927–96 Test Methods for Elemental Analysis of Lubricant and Additive Components—Barium, Calcium, Phosphorus, Sulfur, and Zinc by Wavelength-Dispersive X-Ray Fluorescence Spectroscopy, **05.02**
D 4928–96 Test Method for Water In Crude Oils by Coulometric Karl Fischer Titration, **05.03**
D 4929–94 Test Methods for Determination of Organic Chloride Content in Crude Oil, **05.03**
D 4930–94 Test Method for Dust Control Material on Calcined Petroleum Coke, **05.03**
D 4931–92(1997) Test Method for Gross Moisture in Green Petroleum Coke, **05.03**
D 4932–89(1995)$^{\varepsilon 1}$ Test Methods for Fastener Rupture and Tear Resistance of Roofing and Waterproofing Sheets, Roll Roofing, and Shingles, **04.04**
D 4933–91(1997)$^{\varepsilon 1}$ Guide for Moisture Conditioning of Wood and Wood-Base Materials, **04.10**
D 4934–94(1998)$^{\varepsilon 1}$ Test Method for Rubber Compounding Materials: 2-Benzothiazyl Sulfenamide Accelerators—Insolubles, **09.01**
D 4935–89(1994)$^{\varepsilon 1}$ Test Method for Measuring the Electromagnetic Shielding Effectiveness of Planar Materials, **10.02**
D 4936–96 Test Method for Mercaptobenzothiazole Sulfenamide Assay by Reduction/Titration, **09.01**
D 4937–96$^{\varepsilon 1}$ Test Method for p-Phenylenediamine Antidegradants Purity by Gas Chromatography, **09.01**
D 4938–89(1996) Test Method for Erosion Testing of Antifouling Paints Using High Velocity Water, **06.02**
D 4939–89(1996) Test Method for Subjecting Marine Antifouling Coating to Biofouling and Fluid Shear Forces in Natural Seawater, **06.02**
D 4940–98 Test Method for Conductimetric Analysis of Water-Soluble Ionic Contamination of Blasting Abrasives, **06.02**
D 4941–89(1994)$^{\varepsilon 1}$ Practice for Preparing Drawdowns of Artists' Paste Paints, **06.02**
D 4942–89(1996) Test Methods for Water Pickup of Lithographic Printing Inks and Vehicles in a Laboratory Mixer, **06.02**
D 4943–95 Test Method for Shrinkage Factors of Soils by the Wax Method, **04.09**
D 4944–98 Test Method for Field Determination of Water (Moisture) Content of Soil by the Calcium Carbide Gas Pressure Tester Method, **04.09**
D 4945–96 Test Method for High-Strain Dynamic Testing of Piles, **04.09**
D 4946–89(1994) Test Method for Blocking Resistance of Architectural Paints, **06.02**
D 4947–94 Practice for Chlordane and Heptachlor Residues in Indoor Air, **11.03**
D 4948–89(1993) Test Method for Determination of the Upper Layer Separated from a Viscous Liquid, **06.01**
D 4949–94 Test Method for Determination of D-C Resistivity of Written Paper (Keithley Method), **15.09**
D 4950–95 Classification and Specification for Automotive Service Greases, **05.03**
D 4951–96 Test Method for Determination of Additive Elements in Lubricating Oils by Inductively Coupled Plasma Atomic Emission Spectrometry, **05.03**
D 4952–97 Test Method for Qualitative Analysis for Active Sulfur Species in Fuels and Solvents (Doctor Test), **05.03**
D 4953–93 Test Method for Vapor Pressure of Gasoline and Gasoline-Oxygenate Blends (Dry Method), **05.03**
D 4954–89(1995)$^{\varepsilon 1}$ Test Method for Determination of Nitrilotriacetates in Detergents, **15.04**
D 4955–89(1997) Practice for Field Evaluation of Automotive Polish, **15.04**
D 4956–95 Specification for Retroreflective Sheeting for Traffic Control, **04.03**
D 4957–95 Test Method for Apparent Viscosity of Asphalt Emulsion Residues and Non-Newtonian Bitumens by Vacuum Capillary Viscometer, **04.03**
D 4958–97 Test Method for Comparison of the Brush Drag of Latex Paints, **06.02**
D 4959–89(1994) Test Method for Determination of Water (Moisture) Content of Soil by Direct Heating Method, **04.09**
D 4960–89(1994)$^{\varepsilon 1}$ Test Method for Evaluation of Color for Thermoplastic Traffic Marking Materials, **06.02**
D 4961–93 Test Methods for Gas Chromatographic Analysis of Major Organic Impurities in Phenol Produced by the Cumene Process, **06.04**
D 4962–95$^{\varepsilon 1}$ Practice for NaI (Tl) Gamma-Ray Spectrometry of Water, **11.02**
D 4963–99 Test Method for Ignition Loss of Glass Strands and Fabrics, **07.02**
D 4964–96 Test Method for Tension and Elongation of Elastic Fabrics (Constant-Rate-of-Extension Type Tensile Testing Machine), **07.02**
D 4965–96 Terminology of Seams and Seam Finishes in Home Sewing, **07.02**
D 4966–98 Test Method for Abrasion Resistance of Textile Fabrics (Martindale Abrasion Tester Method), **07.02**
D 4967–95 Guide for Selecting Materials to Be Used for Insulation, Jacketing and Strength Components in Fiber-Optic Cables, **10.02**
D 4968–98 Guide To Using the Flow Chart for Annual Review of Standards Including the Model Precision and Bias Statement for Plastics, **08.03**
D 4969–97 Specification for PTFE Coated Glass Fabric, **08.03**
D 4970–98 Test Method for Pilling Resistance and Other Related Surface Changes of Textile Fabrics (Martindale Pressure Tester Method), **07.02**
D 4971–89(1994) Test Method for Determining the In Situ Modulus of Deformation of Rock Using the Diametrically Loaded 76-mm (3.0-in.) Borehole Jack, **04.09**
D 4972–95a Test Method for pH of Soils, **04.09**
D 4973 Discontinued 1998; Specification for White Rigid Poly(Vinyl Chloride)(PVC) Insulating Storm Windows
D 4974–93 Test Method for Thermal Shrinkage of Yarn and Cord Using the Testrite Thermal Shrinkage Oven, **07.02**
D 4975–96a Test Methods for Single-Filament Tire Bead Wire Made from Steel, **07.02**
D 4976–98 Specification for Polyethylene Plastics Molding and Extrusion Materials, **08.03**
D 4977–98b Test Method for Granule Adhesion to Mineral Surfaced Roofing by Abrasion, **04.04**
D 4978–95 Test Method for Screening of Reactive Sulfides in Waste, **11.04**
D 4979–95 Test Method for Physical Description Screening Analysis in Waste, **11.04**
D 4980–89 Test Method for Screening of pH in Waste, **11.04**
D 4981–95 Test Method for Screening of Oxidizers in Waste, **11.04**
D 4982–95 Test Methods for Flammability Potential Screening Analysis of Waste, **11.04**
D 4983–89(1996) Test Method for Cyclohexylamine, Morpholine, and Diethylaminoethanol in Water and Condensed Steam by Direct Aqueous Injection Gas Chromatography, **11.02**
D 4984–89(1994)$^{\varepsilon 1}$ Test Method for Carbon Dioxide in Natural Gas Using Length-of-Stain Detector Tubes, **05.05**
D 4985–98 Specification for Low Silicate Ethylene Glycol Base Engine Coolant for Heavy Duty Engines Requiring a Pre-Charge of Supplemental Coolant Additive (SCA), **15.05**
D 4986–98 Test Method for Horizontal Burning Characteristics of Cellular Polymeric Materials, **08.03**
D 4987–94 Test Method for Tensile Breaking Strength of Perforations in One-Part Continuous Forms Paper, **15.09**
D 4988–96 Test Method for Determination of Calcium Carbonate Content (Alkaline Reserve of Paper), **15.09**
D 4989–90a(1994)$^{\varepsilon 1}$ Test Method for the Apparent Viscosity (Flow) of Roofing Bitumens Using the Parallel Plate Plastometer, **04.04**
D 4990–97a Specification for Coal Tar Glass Felt Used in Roofing and Waterproofing, **04.04**
D 4991–94 Test Method for Leakage Testing of Empty Rigid Containers by Vacuum Method, **15.09**
D 4992–94$^{\varepsilon 1}$ Practice for Evaluation of Rock to Be Used for Erosion Control, **04.09**
D 4993–89(1994) Practice for Calculation and Adjustment of Silica (SiO_2) Scaling for Reverse Osmosis, **11.02**
D 4994–89(1996) Practice for Recovery of Viruses from Wastewater Sludges, **11.02**
D 4995–89(1995)$^{\varepsilon 1}$ Specifications for Electronic and Degreasing Grades of 1,1,2-Trichloro 1,2,2-Trifluoroethane Solvent, **15.05**
D 4996 Discontinued 1995; Test Method for Evaluation of Fluids for Effects on Wear of Tractor Final Drives
D 4997 Discontinued 1995; Test Method for Evaluation of Water Sensitivity of Multi-Purpose Power Transmission Fluids
D 4998–95 Test Method for Evaluating Wear Characteristics of Tractor Hydraulic Fluids, **05.03**
D 4999 Discontinued 1995; Test Method for Evaluation of Fluids for Effects on Friction of Wet, Bronze-Faced, Friction Brakes
D 5000–89(1995)$^{\varepsilon 1}$ Practice for Evaluating Activity of Clay Elements Using a Side-Stream Sensor, **05.03**
D 5001–90a(1995)$^{\varepsilon 1}$ Test Method for Measurement of Lubricity of Aviation Turbine Fuels by the Ball-On-Cylinder Lubricity Evaluator (BOCLE), **05.03**
D 5002–94 Test Method for Density and Relative Density of Crude Oils by Digital Density Analyzer, **05.03**
D 5003–95 Test Method for Hardgrove Grindability Index (HGI) of Petroleum Coke, **05.03**
D 5004–89(1994)$^{\varepsilon 1}$ Test Method for Real Density of Calcined Petroleum Coke by Xylene Displacement, **05.03**
D 5005 Discontinued 1995; Test Method for Evaluation of Fluids for Effects on Friction and Wear of Wet Clutches
D 5006–96 Test Method for Determination of Fuel System Icing Inhibitors (Ether Type) in Aviation Fuels, **05.03**
D 5007–89(1993) Test Method for Wet-to-Dry Hiding Change, **06.02**
D 5008–97 Test Method for Ethyl Methyl Pentanol Content and Purity Value of 2-Ethylhexanol by Gas Chromatography, **06.04**
D 5009–96 Test Method for Evaluating and Comparing Transfer Efficiency Under Laboratory Conditions, **06.02**
D 5010–97 Guide for Testing Printing Inks and Related Materials, **06.02**
D 5011–92(1997)$^{\varepsilon 1}$ Practices for Calibration of Ozone Monitors Using Transfer Standards, **11.03**
D 5012–89(1994)$^{\varepsilon 1}$ Guide for Preparation of Materials Used for the Collection and Preservation of Atmospheric Wet Deposition, **11.03**
D 5013–89(1998) Practices for Sampling Wastes from Pipes and Other Point Discharges, **11.04**
D 5014–94 Test Method for Measurement of Formaldehyde in Indoor Air

D 5196–91 Guide for Biomedical Grade Water, **11.01**
D 5197–97 Test Method for Determination of Formaldehyde and Other Carbonyl Compounds in Air (Active Sampler Methodology), **11.03**
D 5198–92(1997) Practice for Nitric Acid Digestion of Solid Waste, **11.04**
D 5199–98 Test Method for Measuring Nominal Thickness of Geotextiles and Geomembranes, **04.09**
D 5200–92(1997)ε1 Test Method for Determination of Weight Percent Volatile Content of Solvent-Borne Paints in Aerosol Cans, **06.01**
D 5201–97 Practice for Calculating Formulation Physical Constants of Paints and Coatings, **06.01**
D 5202–91(1997) Test Method for Determining Triaxial Compression Creep Strength of Chemical Grouted Soils, **04.09**
D 5203–98 Specification for Polyethylene Plastics Molding and Extrusion Materials from Recycled Post-Consumer HDPE Sources, **08.03**
D 5204–91 Specification for Polyamide-Imide (PAI) Molding and Extrusion Materials, **08.03**
D 5205–96 Specification for Polyetherimide (PEI) Materials, **08.03**
D 5206–96 Test Method for Windload Resistance of Rigid Poly(Vinyl Chloride) (PVC) Siding, **08.04**
D 5207–98 Practice for Calibration of 20 and 125 mm Test Flames for Small-Scale Burning Tests on Plastic Materials, **08.03**
D 5208–91 Practice for Operating Fluorescent UV and Condensation Apparatus for Exposure of Photodegradable Plastics, **08.03**
D 5209–92 Test Method for Determining the Aerobic Biodegradation of Plastic Materials in the Presence of Municipal Sewer Sludge, **08.03**
D 5210–92 Test Method for Determining the Anaerobic Biodegradation of Plastic Materials in the Presence of Municipal Sewer Sludge, **08.03**
D 5211–97 Specification for Xylenes for p–Xylene Feedstock, **06.04**
D 5212–91(1997) Specification for High Load Rotational Confined Elastomeric Bearings for Bridges and Structures, **04.03**
D 5213–95 Specification for Polymeric Resin Film for Electrical Insulation and Dielectric Applications, **10.02**
D 5214 Discontinued 1995; Test Method for Polyimide Resin Film for Electrical Insulation and Dielectric Application; Replaced by D 2305
D 5215–93 Test Method for Instrumental Evaluation of Staining of Vinyl Flooring by Adhesives, **15.06**
D 5216–98 Specification for Propylene Glycol Base Engine Coolant for Automobile and Light Duty Service, **15.05**
D 5217–91(1994) Guide for Detection of Fouling and Degradation of Particulate Ion Exchange Materials, **11.02**
D 5218 Not yet assigned
D 5219–99 Terminology Relating to Body Dimensions for Apparel Sizing, **07.02**
D 5220–92(1997) Test Method for Water Content of Soil and Rock In-Place by the Neutron Depth Probe Method, **04.09**
D 5221 Discontinued 1997; Test Method for Continuous Measurement of Formaldehyde in Air
D 5222–98 Guide for High Fire-Point Electrical Mineral Insulating Oils, **10.03**
D 5223–98 Specification for Engine Coolant Grade Propylene Glycol, **15.05**
D 5224–93 Practice for Compression Molding Test Specimens of Thermosetting Molding Compounds, **08.03**
D 5225–98 Test Method for Measuring Solution Viscosity of Polymers with a Differential Viscometer, **08.03**
D 5226–98 Practice for Dissolving Polymer Materials, **08.03**
D 5227–95 Test Method for the Measurement of Hexane Extractable Content of Polyolefins, **08.03**
D 5228–92(1996) Test Method for Determination of the Butane Working Capacity of Activated Carbon, **15.01**
D 5229/D5229M–92(1998)ε1 Test Method for Moisture Absorption Properties and Equilibrium Conditioning of Polymer Matrix Composite Materials, **15.03**
D 5230/D5230M–99 Test Method for Carbon Black—Automated Individual Pellet Crush Strength, **09.01**
D 5231–92(1998) Test Method for Determination of the Composition of Unprocessed Municipal Solid Waste, **11.04**
D 5232–92(1997) Test Method for Determining the Stability and Miscibility of a Solid, Semi-Solid, or Liquid Waste Material, **11.04**
D 5233–92(1999) Test Method for Single Batch Extraction Method for Wastes, **11.04**
D 5234–92(1997) Guide for Analysis of Ethylene Product, **05.03**
D 5235–97 Test Method for Microscopical Measurement of Dry Film Thickness of Coatings on Wood Products, **06.02**
D 5236–95 Test Method for Distillation of Heavy Hydrocarbon Mixtures (Vacuum Potstill Method), **05.03**
D 5237–92ε1 Guide for Evaluating Fabric Softeners, **15.04**
D 5238–98 Test Method for Smoldering Combustion Potential of Cotton-Based Batting, **07.02**
D 5239–98 Practice for Characterizing Fly Ash for Use in Soil Stabilization, **04.09**
D 5240–92(1997) Test Method for Testing Rock Slabs to Evaluate Soundness of Riprap by Use of Sodium Sulfate or Magnesium Sulfate, **04.09**
D 5241–92(1998) Practice for Micro-Extraction of Water for the Analysis of Volatile and Semi-Volatile Organic Compounds in Water, **11.02**
D 5242–92(1996) Test Method for Open-Channel Flow Measurement of Water with Thin-Plate Weirs, **11.01**
D 5243–92(1996) Test Method for Open-Channel Flow Measurement of Water Indirectly at Culverts, **11.01**
D 5244–92 Practice for Recovery of Enteroviruses from Waters, **11.02**
D 5245–92 Practice for Cleaning Laboratory Glassware, Plasticware, and Equipment Used in Microbiological Analyses, **11.02**
D 5246–92 Test Method for Isolation and Enumeration of Pseudomonas Aeruginosa from Water, **11.02**
D 5247–92 Test Method for Determining the Aerobic Biodegradability of Degradable Plastics by Specific Microorganisms, **08.03**
D 5248–96 Specification for Reclaimed 1,1,2-Trichloro 1,2,2-Trifluoroethane, **15.05**
D 5249–95 Specification for Backer Material for Use with Cold- and Hot-Applied Joint Sealants in Portland-Cement Concrete and Asphalt Joints, **04.03**
D 5250–99ε1 Specification for Poly(Vinyl Chloride) Gloves for Medical Application, **09.02**
D 5251–98a Practice for Operation of the Tetrapod Walker Drum Tester, **07.02**
D 5252–98a Practice for Operation of the Hexapod Drum Tester, **07.02**
D 5253–96 Terminology of Writing Care Instructions and General Refurbishing Procedures for Textile Floor Coverings and Textile Upholstered Furniture, **07.02**
D 5254–92ε1 Practice for Minimum Set of Data Elements to Identify a Ground-Water Site, **04.09**
D 5255–97ε1 Practice for Certification of Personnel Engaged in the Testing of Soil and Rock, **04.09**
D 5256–92(1996) Test Method for the Relative Efficacy of Dynamic Solvent Systems for Dissolving Water-Formed Deposits, **11.02**
D 5257–97 Test Methods for Dissolved Hexavalent Chromium in Water by Ion Chromatography, **11.01**
D 5258–92(1996) Practice for Acid-Extraction of Elements from Sediments Using Closed Vessel Microwave Heating, **11.02**
D 5259–92 Test Method for Isolation and Enumeration of Enterococci from Water by the Membrane Filter Procedure, **11.02**
D 5260–97 Classification for Chemical Resistance of Poly(Vinyl Chloride)(PVC) Homopolymer and Copolymer Compounds and Chlorinated Poly(Vinyl Chloride)(CPVC) Compounds, **08.03**
D 5261–92(1996) Test Method for Measuring Mass per Unit Area of Geotextiles, **04.09**
D 5262–97 Test Method for Evaluating the Unconfined Tension Creep Behavior of Geosynthetics, **04.09**
D 5263–93 Test Method for Determining the Relative Degree of Oxidation in Bituminous Coal by Alkali Extraction, **05.05**
D 5264–98 Practice for Abrasion Resistance of Printed Materials by the Sutherland Rub Tester, **15.09**
D 5265–92(1998)ε1 Test Method for Bridge Impact Testing, **15.09**
D 5266–97 Practice for Estimating the Percentage of Wood Failure in Adhesive Bonded Joints, **15.06**
D 5267–97 Test Method for Determination of Extrudability of Cartridge Adhesives, **15.06**
D 5268–92(1996) Specification for Topsoil Used for Landscaping Purposes, **04.09**
D 5269–96 Test Method for Determining Transmissivity of Nonleaky Confined Aquifers by the Theis Recovery Method, **04.09**
D 5270–96 Test Method for Determining Transmissivity and Storage Coefficient of Bounded, Nonleaky, Confined Aquifers, **04.09**
D 5271–93 Test Method for Determining the Aerobic Biodegradation of Plastic Materials in an Activated-Sludge-Wastewater-Treatment System, **08.03**
D 5272–92 Practice for Outdoor Exposure Testing of Photodegradable Plastics, **08.03**
D 5273–92(1997) Guide for Analysis of Propylene Concentrates, **05.03**
D 5274–92(1997) Guide for Analysis of 1,3–Butadiene Product, **05.03**
D 5275–92(1998)ε1 Test Method for Fuel Injector Shear Stability Test (FISST) for Polymer Containing Fluids, **05.03**
D 5276–98 Test Method for Drop Test of Loaded Containers by Free Fall, **15.09**
D 5277–92(1997) Test Method for Performing Programmed Horizontal Impacts Using an Inclined Impact Tester, **15.09**
D 5278–98 Test Method for Elongation of Narrow Elastic Fabrics (Static-Load Testing), **07.02**
D 5279–95 Test Method for Measuring the Dynamic Mechanical Properties of Plastics in Torsion, **08.03**
D 5280–96 Practice for Evaluation of Performance Characteristics of Air Quality Measurement Methods with Linear Calibration Functions, **11.03**
D 5281–98 Test Method for Collection and Analysis of Hexavalent Chromium in Ambient, Workplace, or Indoor Atmospheres, **11.03**
D 5282–98 Test Methods for Compatibility of Construction Material with Silicone Fluid Used for Electrical Insulation, **10.03**
D 5283–92(1997) Practice for Generation of Environmental Data Related to Waste Management Activities: Quality Assurance and Quality Control Planning and Implementation, **11.04**
D 5284–93 Test Method for Sequential Batch Extraction of Waste with Acidic Extraction Fluid, **11.04**
D 5285–92(1997) Test Method for 24-Hour Batch-Type Measurement of Volatile Organic Sorption by Soils and Sediments, **11.04**
D 5288–95 Test Methods for the Determination of Transfer Efficiency Under General Production Conditions for Spray Application of Paints, **06.02**
D 5287–97 Practice for Automatic Sampling of Gaseous Fuels, **05.05**
D 5288–97 Test Method for Determining the Tracking Index of Electrical Insulating Materials using Various Electrode Materials (Excluding Platinum), **10.02**
D 5289–95 Test Method for Rubber Property—Vulcanization Using Rotorless Cure Meters, **09.01**
D 5290 Discontinued 1997; Test Method for Measurement of Oil Consumption,

D 5837–95 Test Method for Furanic Compounds in Electrical Insulating Liquids by High Performance Liquid Chromatography (HPLC), **10.03**
D 5839–96 Test Method for Trace Element Analysis of Hazardous Waste Fuel by Energy-Dispersive X-Ray Fluorescence Spectrometry, **11.04**
D 5840–95 Specification for Type II Polymer Modified Asphalt Cement for Use in Pavement Construction, **04.03**
D 5841–95 Specification for Type III Polymer Modified Asphalt Cement for Use in Pavement Construction, **04.03**
D 5842–95 Practice for Sampling and Handling of Fuels for Volatility Measurement, **05.03**
D 5843–95 Guide for Application of Fully Adhered Vulcanized Rubber Sheets Used in Waterproofing, **04.04**
D 5844–98 Test Method for Evaluation of Automotive Engine Oils for Inhibition of Rusting (Sequence IID), **05.03**
D 5845–95 Test Method for Determination of MTBE, ETBE, TAME, DIPE, Methanol, Ethanol and tert-Butanol in Gasoline by Infrared Spectroscopy, **05.03**
D 5846–98 Test Method for Universal Oxidation Test for Hydraulic Fluids and Turbine Oils, **05.03**
D 5847–99 Practice for Writing Quality Control Specifications for Standard Test Methods for Water Analysis, **11.02**
D 5848–98 Test Method for Mass Per Unit Area of Pile Yarn Floor Coverings, **07.02**
D 5849–95 Test Method for Evaluating the Resistance of Modified Bituminous Roofing Membranes to Cyclic Joint Displacement, **04.04**
D 5850–95 Test Method (Analytical Procedure) for Determining Transmissivity, Storage Coefficient, and Anisotropy Ratio from a Network of Partially Penetrating Wells, **04.09**
D 5851–95 Guide for Planning and Implementing a Water Monitoring Program, **11.01**
D 5852–95 Test Method for Erodibility Determination of Soil in the Field or in the Laboratory by the Jet Index Method, **04.09**
D 5853–95 Test Method for Pour Point of Crude Oils, **05.03**
D 5854–96 Practice for Mixing and Handling of Liquid Samples of Petroleum and Petroleum Products, **05.03**
D 5855–95 Test Method (Analytical Procedure) for Determining Transmissivity and Storage Coefficient of a Confined Nonleaky or Leaky Aquifer by the Constant Drawdown Method in a Flowing Well, **04.09**
D 5856–95 Test Method for Measurement of Hydraulic Conductivity of Porous Material Using a Rigid-Wall, Compaction-Mold Permeameter, **04.09**
D 5857–96 Specification for Propylene Plastic Injection and Extrusion Materials Using ISO Protocol and Methodology, **08.03**
D 5858–96$^{\epsilon 1}$ Guide for Calculating In Situ Equivalent Elastic Moduli of Pavement Materials Using Layered Elastic Theory, **04.09**
D 5860–95 Test Method for Evaluation of the Effect of Water Repellent Treatments on Freeze-Thaw Resistance of Hydraulic Cement Mortar Specimens, **06.02**
D 5861–95 Guide to Significance of Particle Size Measurements of Coating Powders, **06.02**
D 5862–95 Test Method for Evaluation of Engine Oils in the Two-Stroke Cycle Turbo-Supercharged 6V92TA Diesel Engine, **05.03**
D 5863–95 Test Method for Determination of Nickel, Vanadium, Iron, and Sodium in Crude Oils and Residual Fuels by Flame Atomic Absorption Spectrometry, **05.03**
D 5864–95 Test Method for Determining the Aerobic Aquatic Biodegradation of Lubricants or Their Components, **05.03**
D 5865–98a Test Method for Gross Calorific Value of Coal and Coke, **05.05**
D 5866–95 Test Method for Neps in Cotton Fibers (AFIS-N Instrument), **07.02**
D 5867–95 Test Methods for Measurement of Physical Properties of Cotton Fibers by High Volume Instruments, **07.02**
D 5868–95 Test Method for Lap Shear Adhesion Test for Fiber Reinforced Plastic (FRP) Bonding, **15.06**
D 5869–95 Practice for Dark Oven Heat Exposure pf Bituminous Materials, **04.04**
D 5870–95 Practice for Calculating Property Retention Index of Plastics, **08.03**
D 5871–98 Specification for Benzene for Cyclohexane Feedstock, **06.04**
D 5872–95$^{\epsilon 1}$ Guide for Use of Casing Advancement Drilling Methods for Geoenvironmental Exploration and the Installation of Subsurface Water-Quality Monitoring Devices, **04.09**
D 5873–95 Test Method for Determination of Rock Hardness by the Rebound Hammer Method, **04.09**
D 5874–95 Test Method for Determination of the Impact Value (IV) of a Soil, **04.09**
D 5875–95$^{\epsilon 1}$ Guide for Use of Cable-Tool Drilling and Sampling Methods for Geoenvironmental Exploration and Installation of Subsurface Water-Quality Monitoring Devices, **04.09**
D 5876–95$^{\epsilon 1}$ Guide for Use of Direct Rotary Wireline Casing Advancement Drilling Methods for Geoenvironmental Exploration and Installation of Subsurface Water-Quality Monitoring Devices, **04.09**
D 5877–95$^{\epsilon 1}$ Guide for Displaying the Results of Chemical Analyses of Ground Water for Major Ions and Trace Elements—Diagrams Based on Data Analytical Calculations, **04.09**
D 5878–95$^{\epsilon 1}$ Guide for Using Rock-Mass Classification Systems for Engineering Purposes, **04.09**
D 5879–95$^{\epsilon 1}$ Practice for Surface Site Characterization for On-Site Septic Systems, **04.09**
D 5880–95$^{\epsilon 1}$ Guide for Subsurface Flow and Transport Modeling, **04.09**
D 5881–95 Test Method (Analytical Procedure) for Determining Transmissivity of Confined Nonleaky Aquifers by Critically Damped Well Response to Instantaneous Change in Head (Slug Test), **04.09**
D 5882–95 Test Method for Low-Strain Integrity Testing of Piles, **04.09**
D 5883–96$^{\epsilon 1}$ Guide for Use of Rotary Kiln Produced Expanded Shale, Clay, or Slate As a Mineral Amendment in Topsoil Used for Landscaping and Related Purposes, **04.09**
D 5884–95 Test Method for Determining the Tearing Strength of Internally Reinforced Geomembranes, **04.09**
D 5885–97 Test Method for Oxidative Induction Time of Polyolefin Geosynthetics by High Pressure Differential Scanning Calorimetry, **04.09**
D 5886–95 Guide for Selection of Test Methods to Determine the Rate of Fluid Permeation Through Geomembranes for Specific Applications, **04.09**
D 5887–98 Test Method for Measurement of Index Flux Through Saturated Geosynthetic Clay Liner Specimens Using Flexible Wall Permeameter, **04.09**
D 5888–95 Practice for Storage and Handling of Geosynthetic Clay Liners, **04.09**
D 5889–97 Practice for Quality Control of Geosynthetic Clay Liners, **04.09**
D 5890–95 Test Method for Swell Index of Clay Mineral Component of Geosynthetic Clay Liners, **04.09**
D 5891–95 Test Method for Fluid Loss of Clay Component of Geosynthetic Clay Liners, **04.09**
D 5892–96a Specification for Type IV Polymer Modified Asphalt Cement for Use in Pavement Construction, **04.03**
D 5893–96 Specification for Cold Applied, Single Component, Chemically Curing Silicone Joint Sealant for Portland Cement Concrete Pavements, **04.03**
D 5894–96 Practice for Cyclic Corrosion/UV Exposure of Painted Metal, (Alternating Exposures in a Fog/Dry Cabinet and a UV/Condensation Cabinet), **06.01**
D 5895–96 Test Method for Measuring Times of Drying or Curing During Film Formation of Organic Coatings Using Mechanical Recorders, **06.01**
D 5896–96 Test Method for Carbohydrate Distribution of Cellulosic Materials, **06.03**
D 5897–96 Test Method for Determination of Percent Hydroxyl on Cellulose Esters by Potentiometric Titration Alternative Method, **06.03**
D 5898–96 Guide for Standard Details for Adhered Sheet Waterproofing, **04.04**
D 5899–98 Classification System for Rubber Compounding Materials for Use in Computer Material Management Systems, **09.01**
D 5900–98 Specification for Physical and Chemical Properties of Industry Reference Materials (IRM), **09.01**
D 5901–96 Test Method for Freezing Point of Aviation Fuels (Automated Optical Method), **05.03**
D 5902–96 Test Method for Rubber;emDetermination of Residual Unsaturation in Hydrogenated Nitrile Rubber (HNBR) by Iodine Value, **09.01**
D 5903–96$^{\epsilon 1}$ Guide for Planning and Preparing for a Groundwater Sampling Event, **04.09**
D 5904–96 Test Method for Total Carbon, Inorganic Carbon, and Organic Carbon in Water by Ultraviolet, Persulfate Oxidation, and Membrane Conductivity Detection, **11.02**
D 5905–98$^{\epsilon 1}$ Practice for the Preparation of Substitute Wastewater, **11.01**
D 5906–96 Guide for Measuring Horizontal Positioning During Measurements of Surface Water Depths, **11.01**
D 5907–96a Test Method for Filterable and Non-Filterable Matter in Water, **11.01**
D 5908–96 Test Method for Resin Binder Distribution and Binder Penetration Analysis of Polyester Nonwoven Fabrics, **07.02**
D 5909–96a Test Method for Drying Time of Oxidative-Drying Printing Inks by Squalene Resistance, **06.02**
D 5910–96 Test Method for Determination of Free Formaldehyde in Emulsion Polymers by Liquid Chromatography, **06.03**
D 5911–96$^{\epsilon 1}$ Practice for Minimum Set of Data Elements to Identify a Soil Sampling Site, **04.09**
D 5912–96$^{\epsilon 1}$ Test Method (Analytical Procedure) for Determining Hydraulic Conductivity of an Unconfined Aquifer by Overdamped Well Response to Instantaneous Change in Head (Slug), **04.09**
D 5913–96 Test Method for Evaluation of the Cleanability of Paint Brushes, **06.02**
D 5916–96 Test Method for Detection and Enumeration of Clostridium perfringens from Water and Extracted Sediments by Membrane Filtration (MF), **11.02**
D 5917–98 Test Method for Trace Impurities in Monocyclic Aromatic Hydrocarbons by Gas Chromatography and External Calibration, **06.04**
D 5918–96 Test Methods for Frost Heave and Thaw Weakening Susceptibility of Soils, **04.09**
D 5919–96 Practice for Determination of Adsorptive Capacity of Activated Carbon by a Micro-Isotherm Technique for Adsorbates at PPB Concentrations, **15.01**
D 5920–96 Test Method (Analytical Procedure) for Tests of Anisotropic Unconfined Aquifers by the Neuman Method, **04.09**
D 5921–96$^{\epsilon 1}$ Practice for Subsurface Site Characterization of Test Pits for On-Site Septic Systems, **04.09**
D 5922–96$^{\epsilon 1}$ Guide for Analysis of Spatial Variation in Geostatistical Site Investigations, **04.09**
D 5923–96$^{\epsilon 1}$ Guide for Selection of Kriging Methods in Geostatistical Site Investigations, **04.09**
D 5924–96$^{\epsilon 1}$ Guide for Selection of Simulation Approaches in Geostatistical Site Investigations, **04.09**
D 5925–96$^{\epsilon 1}$ Practice for Preliminary Sizing and Delineation of Soil Absorption

Liquid Type, Water Base, for Storage Stability Testing, **15.03**

F 1105–95(1999)$^{\epsilon 1}$ Test Method for Preparing Aircraft Cleaning Compounds, Liquid Type, Temperature-Sensitive, or Solvent-Based for Storage Stability Testing, **15.03**

F 1106–87(1993)$^{\epsilon 1}$ Specification for Warping Heads, Rope Handling (Gypsy Head, Capstan Head), **01.07**

F 1107–95 Terminology Relating to Snowboarding, **15.07**

F 1108–97a Specification for TI6A14V Alloy Castings for Surgical Implants, **13.01**

F 1109 Discontinued 1993; Specification for Porous Composites of Polytetrafluoroethylene and Carbon for Surgical Implant Applications

F 1110–90(1998) Test Method for Sandwich Corrosion Test, **15.03**

F 1111–88(1998) Test Method for Corrosion of Low-Embrittling Cadmium Plate by Aircraft Maintenance Chemicals, **15.03**

F 1112–95 Test Method for Static Testing of Tubeless Pneumatic Tires for Rate of Loss of Inflation Pressure, **09.02**

F 1113–87(1995)$^{\epsilon 1}$ Test Method for Electrochemical Measurement of Diffusable Hydrogen in Steels (Barnacle Electrode), **15.03**

F 1114–94 Specification for Heat Sanitizing Commercial Pot, Pan and Utensil Station Rack Type Water-Driven Rotary Spray, **15.07**

F 1115–95 Test Method for Determining the Carbon Dioxide Loss of Beverage Containers, **15.09**

F 1116–88(1995) Test Method for Determining Dielectric Strength of Overshoe Footwear, **10.03**

F 1117–93(1998) Specification for Dielectric Overshoe Footwear, **10.03**

F 1118–91(1997)$^{\epsilon 1}$ Specification for National Air Medical Transport Units Resources Catalog, **13.01**

F 1119–91 Specification for Rotary Wing Basic Life Support Transport Units, **13.01**

F 1120–87(1998) Specification for Circular Metallic Bellows Type Expansion Joints for Piping Applications, **01.07**

F 1121–87(1998) Specification for International Shore Connections for Marine Fire Applications, **01.07**

F 1122–87(1998) Specification for Quick Disconnect Couplings, **01.07**

F 1123–87(1998) Specification for Non-Metallic Expansion Joints, **01.07**

F 1124–91 Specification for Rotary Wing Advanced Life Support Transport Units, **13.01**

F 1125–87(1995) Terminology of Image Quality in Impact Printing Systems, **15.09**

F 1126–97 Specification for Food Cutters (Electric), **15.07**

F 1127–88(1996) Guide for Containment by Emergency Response Personnel of Hazardous Material Spills, **11.04**

F 1128 Discontinued 1996; Test Method for Abrasion Resistance of Transparent Plastics and Coatings Using Salt Impingement Method

F 1129–88(1995)$^{\epsilon 1}$ Guide for Using Aqueous Foams to Control the Vapor Hazard from Immiscible Volatile Liquids, **11.04**

F 1130–93 Practice for Inspecting the Coating System of a Ship, **01.07**

F 1131 Discontinued 1993; Practice for Inspecting the Coating System of a Ship's Tanks and Voids; Replaced by F 1130

F 1132 Discontinued 1993; Practice for Inspecting the Coating System of a Ship's Deck And Deck Machinery; Replaced by F 1130

F 1133 Discontinued 1993; Practice for Inspecting the Coating System of a Ship's Underwater Hull and Booltop During Drydocking; Replaced by F 1130

F 1134–94 Specification for Insulation Resistance Monitor for Shipboard Electrical Motors and Generators, **01.07**

F 1135–88(1993)$^{\epsilon 1}$ Specification for Cadmium or Zinc Chromate Organic Corrosion Protective Coating for Fasteners, **15.08**

F 1136–88(1993) Specification for Chromium/Zinc Corrosion Protective Coatings for Fasteners, **15.08**

F 1137–88(1993) Specification for Phosphate/Oil and Phosphate/Organic Corrosion Protective Coatings for Fasteners, **15.08**

F 1138–98 Specification for Spray Shields for Mechanical Joints, **01.07**

F 1139–88(1998) Specification for Steam Traps and Drains, **01.07**

F 1140–96 Test Methods for Failure Resistance of Unrestrained and Nonrigid Packages for Medical Applications, **15.09**

F 1141–93(1998) Specification for Wallcovering, **15.07**

F 1142–98 Specification for Manhole Cover Assembly, Bolted, Semi-Flush, Oiltight and Watertight, **01.07**

F 1143–98 Specification for Manhole Cover Assembly, Bolted, Raised, Oiltight and Watertight, **01.07**

F 1144–98 Specification for Manhole Cover Assembly, Bolted, Hinged, Semi-Flush, Oiltight and Watertight, **01.07**

F 1145–92(1996) Specification for Turnbuckles, Swaged, Welded, Forged, **01.07**

F 1146–91 Specification for Rotary Wing Specialized Medical Transport Units, **13.01**

F 1147–99 Test Method for Tension Testing of Porous Metal Coatings, **13.01**

F 1148–98c Consumer Safety Performance Specification for Home Playground Equipment, **15.07**

F 1149–93(1998) Practice for Qualifications, Responsibilities, and Authority of Individuals and Institutions Providing Medical Direction of Emergency Medical Services, **13.01**

F 1150–88(1995) Specification for Commercial Food Waste Pulper and Waterpress Assembly, **15.07**

F 1151–88(1998) Test Method for Determining Variations in Hardness of Film Ribbon Pancakes, **15.09**

F 1152–93 Test Method for Dimensions of Notches on Silicon Wafers, **10.05**

F 1153–92(1997) Test Method for Characterization of Metal-Oxide-Silicon (MOS) Structures by Capacitance-Voltage Measurements, **10.05**

F 1154–99 Practices for Qualitatively Evaluating the Comfort, Fit, Function, and Integrity of Chemical-Protective Clothing, **11.03**

F 1155–98 Practice for Selection and Application of Piping System Materials, **01.07**

F 1156–94 Terminology Relating to Product Counterfeit Protection Systems, **15.07**

F 1157–90(1994)$^{\epsilon 1}$ Practice for Classifying the Relative Performance of the Physical Properties of Security Seals, **15.07**

F 1158–94 Guide for Inspection and Evaluation of Tampering of Security Seals, **15.07**

F 1159–97a Practice for Design and Manufacture of Amusement Rides and Devices, **15.07**

F 1160–98 Practice for Constant Stress Amplitude Fatigue Testing of Porous Metal-Coated Metallic Materials, **13.01**

F 1161–88(1994) Specification for Minimum Performance and Safety Requirements for Components and Systems of Anesthesia Gas Machines, **13.01**

F 1162–88(1994) Specification for Pole Vault Landing Pits, **15.07**

F 1163–99 Specification for Headgear Used in Horse Sports and Horseback Riding, **15.07**

F 1164–97 Test Method for Evaluation of Transparent Plastics Exposed to Accelerated Weathering Combined with Biaxial Stress, **15.03**

F 1165–98 Test Method for Measuring Angular Displacement of Multiple Images in Transparent Parts, **15.03**

F 1166–95a Practice for Human Engineering Design for Marine Systems, Equipment and Facilities, **01.07**

F 1167 Discontinued 1993; Terminology Relating to Aseptic Packaging

F 1168–88(1994) Guide for Use in the Establishment of Thermal Processes for Foods Packaged in Flexible Containers, **15.09**

F 1169–99 Specification for Full Size Baby Crib, **15.07**

F 1170–88(1993) Practice for Determining Performance of a Filter Medium Using Water and Siliceous Particles, **14.04**

F 1171 Not yet assigned

F 1172–88(1998) Specification for Fuel Oil Meters of the Volumetric Positive Displacement Type, **01.07**

F 1173–95 Specification for Thermosetting Resin Fiberglass Pipe and Fittings to Be Used for Marine Applications, **01.07**

F 1174–91(1995) Practice for Using a Personal Computer as a Test Instrument, **15.09**

F 1175–88(1996)$^{\epsilon 1}$ Practice for Using the Computer Impact Print-Out Unit as a Test Instrument for Manifold Comparison, **15.09**

F 1176–93 Practice for Design and Installation of Thermoplastic Irrigation Systems With Maximum Working Pressure of 63 psi, **08.04**

F 1177–96a Terminology Relating to Emergency Medical Services, **13.01**

F 1178–88(1994)$^{\epsilon 1}$ Specification for Enameling System, Baking, Metal Joiner Work and Furniture, **01.07**

F 1179–88(1997) Practice for Inspection Procedure for Use of Anaerobic Thread Locking Compounds with Studs, **01.07**

F 1180 Not yet assigned

F 1181–96 Test Method for Measuring Binocular Disparity in Transparent Parts, **15.03**

F 1182–90(1996) Specification for Anodes, Sacrificial Zinc Alloy, **01.07**

F 1183–96 Specification for Aluminum Alloy Chain Link Fence Fabric, **01.06**

F 1184–94 Specification for Industrial and Commercial Horizontal Slide Gates, **01.06**

F 1185–88(1993)$^{\epsilon 1}$ Specification for Composition of Ceramic Hydroxylapatite for Surgical Implants, **13.01**

F 1186–99 Classification System for Chemicals According to Functional Groups, **11.03**

F 1187–91 Specification for Fixed Wing Basic Life Support Transport Units, **13.01**

F 1188–93a Test Method for Interstitial Atomic Oxygen Content of Silicon by Infrared Absorption, **10.05**

F 1189 Discontinued 1993; Test Method for Using Computer-Assisted Infrared Spectrophotometry to Measure the Interstitial Oxygen Content of Silicon Slices Polished on Both Sides

F 1190–93 Practice for Neutron Irradiation of Unbiased Electronic Components, **10.04**

F 1191 Discontinued 1993; Guide for Radiation Testing of Semiconductor Memories

F 1192M–95 Guide for the Measurement of Single Event Phenomena (SEP) Induced by Heavy Ion Irradiation of Semiconductor Devices [Metric], **10.04**

F 1193–97 Practice for Amusement Ride and Device Manufacturer Quality Assurance Program, **15.07**

F 1194–99 Guide for Documenting the Results of Chemical Permeation Testing on Materials Used in Protective Clothing, **11.03**

F 1195–88(1993)$^{\epsilon 1}$ Specification for Rigid Laryngoscopes for Tracheal Intubation—Hook on Fittings for Fiberilluminated Blades and Handles, **13.01**

F 1196–94 Specification for Sliding Watertight Door Assemblies, **01.07**

F 1197–89(1994)$^{\epsilon 1}$ Specification for Sliding Watertight Door Control Systems, **01.07**

F 1198–92(1997) Guide for Shipboard Fire Detection Systems, **01.07**

F 1199–88(1998) Specification for Cast (All Temperatures and Pressures) and Welded Pipe Line Strainers (150 psig and 150°F Maximum), **01.07**

F 1200–88(1998) Specification for Fabricated (Welded) Pipe Line Strainers (Above 150 psig and 150°F), **01.07**

F 1201–88(1998) Specification for Fluid Conditioner Fittings in Piping Applications Above 0°F, **01.07**

F 1294–97a Terminology Relating to Automatic Identification Hard Copy Printing Systems, **15.09**
F 1295–97a Specification for Wrought Titanium-6 Aluminum-7 Niobium Alloy for Surgical Implant Applications [UNS R56700], **13.01**
F 1296–98 Guide for Evaluating Chemical Protective Clothing, **11.03**
F 1297–90(1994)$^{\epsilon1}$ Guide for Location and Instruction Symbols for Evacuation and Lifesaving Equipment, **01.07**
F 1298–90(1995)$^{\epsilon1}$ Specification for Flexible, Expansion-Type Ball Joints for Marine Applications, **01.07**
F 1299 Discontinued 1997; Specification for Food Service Equipment Hoods for Cooking Appliances
F 1300 Not yet assigned
F 1301–90(1996)$^{\epsilon2}$ Practice for Labeling Chemical Protective Clothing, **11.03**
F 1302 Discontinued 1991; Practice for Abbreviated Marking of Plastic Consumer Products
F 1303–99 Specification for Sheet Vinyl Floor Covering with Backing, **15.04**
F 1304–90(1994)$^{\epsilon1}$ Test Method for Deflection of Resilient Floor Tile, **15.04**
F 1305–94 Guide for the Classification of Amusement Ride and Device-Related Injuries and Illnesses, **15.07**
F 1306–90(1998) Test Method for Slow Rate Penetration Resistance of Flexible Barrier Films and Laminates, **15.09**
F 1307–90 Test Method for Oxygen Transmission Rate Through Dry Packages Using a Coulometric Sensor, **15.09**
F 1308–98 Test Method for Quantitating Volatile Extractables in Microwave Susceptors Used for Food Products, **15.09**
F 1309–98 Practice for Installation Procedures for Fitting Chocks to Marine Machinery Foundations, **01.07**
F 1310 Discontinued 1996; Specification for 65-Gallon Dispensing Tank
F 1311–90(1995)$^{\epsilon1}$ Specification for Large-Diameter Fabricated Carbon Steel Flanges, **01.07**
F 1312–90(1997) Specification for Brick, Insulating, High Temperature, Fire Clay, **01.07**
F 1313–90(1995) Specification for Volatile n-Nitrosamine Levels in Rubber Nipples on Pacifiers, **15.07**
F 1314–95 Specification for Wrought Nitrogen Strengthened-2 Chromium-12.5 Nickel-5 Manganese-2.5 Molybdenum Stainless Steel Bar and Wire for Surgical Implants, **13.01**
F 1315–90(1996)$^{\epsilon1}$ Test Method for Density of a Sheet Gasket Material, **09.02**
F 1316–90(1996) Test Method for Measuring the Transmissivity of Transparent Parts, **15.03**
F 1317–98 Test Method for Calibration of Microwave Ovens, **15.09**
F 1318–90(1998) Test Method for Determination of Productivity Using Electrostatic Copy Machines with Various Configurations, **15.09**
F 1319–94 Test Method for Determination of Abrasion and Smudge Resistance of Images Produced from Business Copy Products (Crockmeter Method), **15.09**
F 1320–92(1996) Test Method for Evaluating Thermal Paper Employing a Facsimile Thermal Printer as a Test Instrument, **15.09**
F 1321–92 Guide for Conducting a Stability Test (Lightweight Survey and Inclining Experiment) to Determine the Light Ship Displacement and Centers of Gravity of a Vessel, **01.07**
F 1322–90(1998) Guide for Selection of Shipboard Incinerators, **01.07**
F 1323–98 Specification for Shipboard Incinerators, **01.07**
F 1324 Not yet assigned
F 1325–91(1996) Specification for Suture Needle Holders–General Workmanship Requirements and Corresponding Test Methods, **13.01**
F 1326–96 Test Method for Measuring Maximum Dry Volume of Utility Vacuum Cleaners, **15.07**
F 1327–98 Terminology Relating to Barrier Materials for Medical Packaging, **15.09**
F 1328–90 Guide for Training the Emergency Medical Technician (Basic) to Prepare Patients for Medical Transportation, **13.01**
F 1329–91(1998) Guide for Training the Emergency Medical Technician (Basic) in Basic Anatomy and Physiology, **13.01**
F 1330–91(1996)$^{\epsilon1}$ Guide for Metallic Abrasive Blasting to Descale the Interior of Pipe, **01.07**
F 1331–91(1996)$^{\epsilon1}$ Practice for Installation Procedures of Vinyl Deck Coverings on Portable Plates in Electrical and Electronic Spaces, **01.07**
F 1332–93 Practice for Use of SI (Metric) Units in Maritime Applications (Committee F-25 Supplement to E 380), **01.07**
F 1333–91(1996)$^{\epsilon1}$ Specification for Construction of Fire and Foam Station Cabinets, **01.07**
F 1334–97 Test Method for Determining Sound Power Level of Vacuum Cleaners, **15.07**
F 1335–98 Specification for Pressure-Rated Composite Pipe for Elevated Temperature Service, **08.04**
F 1336–98 Specification for Poly(Vinyl Chloride) (PVC) Gasketed Sewer Fittings, **08.04**
F 1337–91(1996) Practice for Human Engineering Program Requirements for Ships and Marine Systems, Equipment, and Facilities, **01.07**
F 1338–91(1996) Guide for Main Propulsion Medium Speed Marine Diesel Engines Covering Performance and Minimum Scope of Assembly, **01.07**
F 1339–92(1998) Guide for Organization and Operation of Emergency Medical Services Systems, **13.01**
F 1340 Discontinued 1997; Test Method for Determining the Mean Interface Trap Density of MOSFETs by Charge-Pumping
F 1341–92 Specification for Unalloyed Titanium Wire for Surgical Implant Applications, **13.01**
F 1342–91(1996)$^{\epsilon2}$ Test Method for Protective Clothing Material Resistance to Puncture, **11.03**
F 1343–91 Specification for Anesthetic Equipment—Scavenging Systems for Anesthetic Gases, **13.01**
F 1344–93 Specification for Rubber Floor Tile, **15.04**
F 1345–96 Specification for Zinc-5 % Aluminum-Mischmetal Alloy-Coated Steel Chain-Link Fence Fabric, **01.06**
F 1346–91(1996) Performance Specification for Safety Covers and Labeling Requirements for All Covers for Swimming Pools, Spas and Hot Tubs, **15.07**
F 1347–91(1996) Specification for Manually Operated Fueling Hose Reels, **01.07**
F 1348/F1348M–91(1997) Specification for Pneumatic Rotary Descaling Machines, **01.07**
F 1349–98 Test Method for Nonvolatile Ultraviolet (UV) Absorbing Extractables from Microwave Susceptors, **15.09**
F 1350–96 Specification for Stainless Steel Surgical Fixation Wire, **13.01**
F 1351–96 Practice for Determination of the Effect of Hard Creasing Paper on Images Produced by Business Imaging Systems, **15.09**
F 1352–91(1997)$^{\epsilon1}$ Guide for Broadhead Performance and Safety Standards, **15.07**
F 1353 Discontinued 1995; Specification for Frozen Finely Ground Chicken
F 1354 Discontinued 1995; Specification for Frozen Precooked Imitation Crab Products
F 1355–93 Guide for Irradiation of Fresh Fruits for Disinfestation as a Quarantine Treatment, **15.09**
F 1356–93 Guide for the Irradiation of Fresh and Frozen Red Meats and Poultry (to Control Pathogens), **15.09**
F 1357–91(1997) Specification for Articulating Total Wrist Implants, **13.01**
F 1358–95 Test Method for Effects of Flame Impingement on Materials Used in Protective Clothing Not Designated Primarily for Flame Resistance, **11.03**
F 1359–99 Test Method for Liquid Penetration Resistance of Protective Clothing or Protective Ensembles Under a Shower Spray While on a Mannequin, **11.03**
F 1360–93(1999) Specification for Ovens, Microwave, Electric, **15.07**
F 1361–95 Test Methods for Performance of Open Deep Fat Fryers, **15.07**
F 1362–97 Test Method for Shear Strength and Shear Modulus of Aerospace Glazing Interlayer Materials, **15.03**
F 1363–91(1997)$^{\epsilon1}$ Guide for Reduction of Risk of Injury for Archery Overdraws, **15.07**
F 1364–92(1997)$^{\epsilon1}$ Practice for Use of a Calibration Device to Demonstrate the Inspection Capability of an Interferometric Laser Imaging Nondestructive Tire Inspection System, **09.02**
F 1365–91 Test Method for Water Infiltration Resistance of Plastic Underground Conduit Joints Which Use Flexible Elastomeric Seals, **08.04**
F 1366–92(1997) Test Method for Measuring Oxygen Concentration in Heavily Doped Silicon Substrates by Secondary Ion Mass Spectrometry, **10.05**
F 1367–98 Specification for Chromium Sputtering Targets for Thin Film Applications, **10.04**
F 1368–92 Test Method for Determining the Sieving Performance of a Fluid Filter Medium Employing An Aqueous Suspension of Microspheres and a Spectrophotometer, **14.04**
F 1369–93a Specification for Heaters, Convection, Steam and Hot Water, **01.07**
F 1370–92 Specification for Pressure-Reducing Valves for Water Systems, Shipboard, **01.07**
F 1371–93a Specification for Vegetable Peeling Machines, Electric, **15.07**
F 1372–93 Test Method for Scanning Electron Microscope (SEM) Analysis of Metallic Surface Condition for Gas Distribution System Components, **10.05**
F 1373–93 Test Method for Determination of Cycle Life of Automatic Valves for Gas Distribution System Components, **10.05**
F 1374–92 Test Method for Ionic/Organic Extractables of Internal Surfaces-IC/GC /FTIR for Gas Distribution System Components, **10.05**
F 1375–92 Test Method for Energy Dispersive X-Ray Spectrometer (EDX) Analysis of Metallic Surface Condition for Gas Distribution System Components, **10.05**
F 1376–92 Guide for Metallurgical Analysis for Gas Distribution System Components, **10.05**
F 1377–98a Specification for Cobalt-Chromium-Molybdenum Powder for Coating of Orthopedic Implants, **13.01**
F 1378–99 Specification for Shoulder Prosthesis, **13.01**
F 1379–95 Terminology Relating to Barbed Tape, **01.06**
F 1380–95a Specification for Metal Insert Fittings for Polybutylene (PB) Tubing, **08.04**
F 1381–92(1997) Guide for Planning and Developing 9-1-1 Enhanced Telephone Systems, **13.01**
F 1382–92(1997) Specification for Search and Rescue Computer Software Information Exchange, **13.01**
F 1383–99 Test Method for Resistance of Protective Clothing Materials to Permeation by Liquids or Gases Under Conditions of Intermittent Contact, **11.03**
F 1384–93 Practice for Fire Tests of Marine Joiner Doors, **01.07**
F 1385–92 Practice for Platforms in Cargo Tanks, **01.07**
F 1386–92(1997) Guide for Construction of a Sounding Tube and Striker Plate for Tank Sounding, **01.07**
F 1387–93(1998) Specification for Performance of Mechanically Attached Fittings, **01.07**
F 1388–92 Test Method for Generation Lifetime and Generation Velocity of

Upholstered Furnishings in Detention and Correctional Facilities, **15.07**
F 1871–98 Specification for Folded/Formed Poly (Vinyl Chloride) Pipe Type A for Existing Sewer and Conduit Rehabilitation, **08.04**
F 1872–98 Guide for Use of Chemical Shoreline Cleaning Agents0olon; Environmental and Operational Considerations, **11.04**
F 1873–98 Specification for High-Purity Dense Yttria Tetragonal Zirconium Oxide Polycrystal (Y-TZP) for Surgical Implant Applications, **13.01**
F 1874–98 Test Method for Bend Testing of Needles Used on Surgical Sutures, **13.01**
F 1875–98 Practice for Fretting Corrosion Testing of Modular Implant Interfaces Hip Femoral Head-Bore and Cone Taper Interface, **13.01**
F 1876–98 Specification for Polyetherketoneetherketoneketone PEKEKK Resins for Surgical Implant Applications, **13.01**
F 1877–98 Practice for Characterization of Particles, **13.01**
F 1878–98 Guide for Escort Vessel Evaluation and Selection, **01.07**
F 1879–98 Guide for Demonstrating Obedience and Agility in Search and Rescue Dogs, **13.01**
F 1880–98 Specification for Determination of Percent of Let-Off For Archery Bows, **15.07**
F 1881–98 Test Method for Measuring Baseball Bat Performance Factor, **15.07**
F 1882–98 Specification for Residential Basketball Systems, **15.07**
F 1883–98 Practice for Selection of Wire and Cable Size in AWG or Metric Units, **01.07**
F 1884–98 Test Method for Determining Residual Solvents in Packaging Material, **15.09**
F 1885–98 Guide for Irradiation of Dried Spices, Herbs, and Vegetable Seasonings to Control Pathogens and Other Micro-organisms, **15.09**
F 1886–98 Test Method for Determining Integrity of Seals for Medical Packaging by Visual Inspection, **15.09**
F 1887–98 Test Method for Measuring the Coefficient of Restitution (COR) of Baseballs and Softballs, **15.07**
F 1888–98 Test Method for Compression-Displacement of Baseballs and Softballs, **15.07**
F 1889–98 Guide for Straightness Measurement of Arrow Shafts, **15.07**
F 1890–98 Test Method for Measuring Softball Bat Performance Factor, **15.07**
F 1891–98 Specification for Arc and Flame Resistant Rainwear, **10.03**
F 1892–98 Guide for Ionizing Radiation (Total Dose) Effects Testing of Semiconductor Devices, **10.04**
F 1893–98 Guide for Measurement of Ionizing Dose-Rate Burnout of Semiconductor Devices, **10.04**
F 1894–98 Test Method for Quantifying Tungsten Silicide Semiconductor Process Films for Composition and Thickness, **10.05**
F 1895–98 Practice for Submersion of a Membrane Switch, **10.05**
F 1896–98 Test Method for Determining the Electrical Resistivity of a Printed Conductive Material, **10.05**
F 1897–98 Specification for Leg Protection for Chain Saw Users, **11.03**
F 1898–98 Specification for Bicycle Helmets Used by Infants and Toddlers, **15.07**
F 1899–98 Specification for Food Waste Pulper Without Waterpress Assembly, **15.07**
F 1900–98 Test Method for Water Resistance of Footwear Using a Walking Step Simulator, **15.07**
F 1901–98 Specification for Polyethylene (PE) Pipe and Fittings for Drain System, **08.04**
F 1903–98 Practice for Testing for Biological Responses to Particles In Vitro, **13.01**
F 1904–98 Practice for Testing the Biological Responses to Particles In Vivo, **13.01**
F 1905–98 Practice for Selecting Tests for Determining the Propensity of Materials to Cause Immunotoxicity, **13.01**
F 1906–98 Practice for Evaluation of Immune Responses In Biocompatibility Testing Using ELISA Tests, Limphocyte Proliferation, and Cell Migration, **13.01**
F 1908–98 Guide for Fences for Residential Outdoor Swimming Pools, Hot Tubs, and Spas, **01.06**
F 1909–98 Specification for Preformed Open-Cell Sponge Rubber Pail and Drum Gaskets, **09.02**
F 1910–98 Specification for Long Barbed Tape Obstacles, **01.06**
F 1911–98 Practice for Installation of Barbed Tape, **01.06**
F 1912–98 Specification for Bean Bag Chairs, **15.07**
F 1913–98 Specification for Vinyl Sheet Floor Covering Without Backing, **15.04**
F 1914–98 Test Method for Short-Term Indentation and Residual Indentation of Resilient Floor Covering, **15.04**
F 1915–98 Test Methods for Glazing for Detention Facilities, **15.07**
F 1916–98 Specifications for Selecting Chain Link Barrier Systems With Coated Chain Link Fence Fabric and Round Posts for Detention Applications, **15.07**
F 1917–99 Consumer Safety Performance Specification for Infant Bedding and Related Accessories, **15.07**
F 1918–98 Safety Performance Specification for Soft Contained Play Equipment, **15.07**
F 1919–98 Specification for Griddles, Single and Double Sided, Self-Heating, Counter or Stand Mounted, Gas and Electric Fired, **15.07**
F 1920–98 Test Method for the Energy Performance of Rack Conveyor, Hot Water Sanitizing, Commercial Dishwashing Machines, **15.07**
F 1921–98 Test Methods for Hot Seal Strength (Hot Tack) of Thermoplastic Polymers and Blends Comprising the Sealing Surfaces of Flexible Webs, **15.09**
F 1922–98 Test Method for Tires, Pneumatic, Vehicular, Highway, **09.02**
F 1923–98 Test Method for Tires, Pneumatic, Low Speed, Off-Highway, **09.02**
F 1925–98 Specification for Virgin Poly L-Lactic Acid Resin for Surgical Implants, **13.01**
F 1926–98 Test Method for Evaluation of the Environmental Stability of Calcium Phosphate Coatings, **13.01**
F 1927–98 Test Method for Determination of Oxygen Gas Transmission Rate, Permeability and Permeance at Controlled Relative Humidity Through Barrier Materials Using a Coulometric Detector, **15.09**
F 1928–98 Safety Guide for Consumer Recreational Use of Fun-Karts, **15.07**
F 1929–98 Test Method for Detecting Seal Leaks in Porous Medical Packaging by Dye Penetration, **15.09**
F 1930–99 Test Method for Evaluation of Flame Resistant Clothing for Protection Against Flash Fire Simulations Using an Instrumented Manikin, **11.03**
F 1931–98 Test Method for Characterization of Gymnastic Landing Mats and Floor Exercise Surfaces, **15.07**
F 1932–98 Test Method for Measuring Sleeping Bag Loft, **15.07**
F 1933–98 Specification for Illustrating the Footprint of a Backpacking or Mountaineering Tent, **15.07**
F 1934–98 Test Method for Weighing a Backpacking or Mountaineering Tent, **15.07**
F 1935–98 Test Method for Measuring the Peak Height of a Backpacking or Mountaineering Tent, **15.07**
F 1936–98 Specification for Shock-Absorbing Properties of North American Football Field Playing Systems as Measured in the Field, **15.07**
F 1937–98 Specification for Body Protectors Used in Horse Sports and Horseback Riding, **15.07**
F 1938–98 Guide for Safer Use of Movable Soccer Goals, **15.07**
F 1939–99 Test Method for Radiant Protective Performance of Flame Resistant Clothing Materials, **11.03**
F 1942–98 Practice for Creating Test Targets for Determining the Ink Yield of the Imaging Supplies Used in Ink Jet Printers, **15.09**
F 1943–98 Test Method for Determining the Dynamic Thermal Response of Thermal Mass Transfer Ribbon Products— Atlantek Method, **15.09**
F 1944–98 Practice for Determining the Quality of the Text, Line- and Solid-Fill Output Produced by Ink Jet Printers, **15.09**
F 1945–98 Practice for Determining the Lightfastness of Ink Jet Prints Exposed to Indoor Fluorescent Lighting, **15.09**
F 1946–98 Practice for Determining the Lightfastness of Ink Jet Prints Exposed to Indoor Fluorescent Lighting and Window-Filtered Daylight, **15.09**
F 1949–99 Specification for Medical Oxygen Delivery Systems for EMS Ground Vehicles, **13.01**
F 1950–99 Specification for Physical Information to be Transferred With Used Amusement Rides and Devices, **15.07**
F 1951–99 Specification for Determination of Accessability of Surface Systems Under and Around Playground Equipment, **15.07**
F 1952–99 Specification for Helmets Used for Down Hill Mountain Bicycle Racing, **15.07**
F 1953–99 Guide for Construction and Maintenance of Grass Tennis Courts, **15.07**
F 1955–99 Test Method for Flammability of Sleeping Bags, **15.07**
F 1956–99 Specification for Rescue Carabiners, **13.01**
F 1957–99 Test Method for Composite Foam Hardness-Durometer Hardness, **15.07**
F 1964–99 Test Method for Performance of Pressure and Kettle Fryers, **15.07**
F 1965–99 Test Method for Performance of Deck Ovens, **15.07**
F 1966–99 Specification for Dough Divider and Rounding Machines, **15.07**
F 1967–99 Consumer Safety Specification for Infant Bath Seats, **15.07**
F 1972–99 Guide for Terminology Relating to Candles and Associated Accessory Items, **15.07**
F 1975–99 Specification for Nonpowered Bicycle Trailers Designed for Human Passengers, **15.07**
F 1976–99 Test Method for Cushioning Properties of Athletic Shoes Using an Impact Test, **15.07**
F 1977–99 Test Method for Determining Initial Fractional Filtration Efficiency of a Vacuum Cleaner System, **15.07**
F 1979–99 Specification for Paintballs Used in the Sport of Paintball, **15.07**

EXHIBIT 28

ANNUAL BOOK OF ASTM STANDARDS

2000

SECTION 00

Index

VOLUME 00.01

Subject Index; Alphanumeric List

Revision issued annually

AC

TA401
.A653
2000, Sec. 00.01
Set 1

Editorial Staff

Assistant Vice President:
Robert Dreyfuss

Director:
Roberta A. Storer

Managers:
Joan L. Cornillot
Paula C. Fazio-Fluehr

Senior Indexer:
H. Joel Shupak

Editors:
Robert F. Allen
Nicole C. Baldini
Elizabeth L. Gutman
Eleanor Keefe
Joanne G. Kramer
Christine M. Leinweber
Vernice A. Mayer
Patricia A. McGee
Kathleen A. Peters
Todd J. Sandler
Emilie A. Whealen
Richard F. Wilhelm

Editorial Assistant:
Julie Wright

Library of Congress Catalog Card Number: 83-641658

ISBN 0-8031-2839-8 (set)
ISBN (section)
ISBN 0-8031-2838-X (volume)

Copyright ©2000 AMERICAN SOCIETY FOR TESTING AND MATERIALS, West Conshohocken, PA. Prior editions copyrighted 1999 and earlier, by the American Society for Testing and Materials. All rights reserved. This material may not be reproduced or copied, in whole or in part, in any printed, mechanical, electronic, film, or other distribution and storage media, without the written consent of the publisher.

ORDER INFORMATION: Additional copies of this book in print, on CD-ROM, or reprints (single or multiple copies) of individual standards may be obtained by contacting ASTM at the above address or at 610-832-9585 (phone), 610-832-9555 (fax), service@astm.org (email), or through www.astm.org (website).

Photocopy Rights

Authorization to photocopy items for internal, personal, or educational classroom use, or the internal, personal, or educational classroom use of specific clients, is granted by the American Society for Testing and Materials (ASTM) provided that the appropriate fee is paid to the Copyright Clearance Center, 222 Rosewood Drive, Danvers, MA 01923, Tel: 978-750-8400; online:http://www.copyright.com/

Printed in Easton, MD, U.S.A.

Alphanumeric List

ASTM Standards

Standards:

Specifications	3064
Test Methods	7680
Terminology	246
Total	10990

Each ASTM standard has a unique serial designation. It is comprised of a capital letter indicating general classification (A, ferrous metals; B, nonferrous metals; C, cementitious, cermanic, concrete, and masonry materials; D, miscellaneous materials; E, miscellaneous subjects; F, materials for specific applications; G, corrosion, deterioration, and degradation of materials; ES, emergency standards; P, proposals; PS, provisional standards), a serial number (one to four digits), a dash, and the year of issue.

In each serial designation, the number following the dash indicates the year of original adoption as standard or, in the case of revision, the year of last revision. Thus, standards adopted or revised during the year 2000 have as their final number, 00. A letter following this number indicates more than one revision during that year, that is 00a indicates the second revision in 2000, 00b the third revision, etc. Standards that have been reapproved without change are indicated by the year of last reapproval in parentheses as part of the designation number, for example, (2000). A superscript epsilon indicates an editorial change since the last revision or reapproval; ϵ1 for the first change, ϵ2 for the second, etc.

If a standard is written in acceptable metric units and has a companion standard written in inch-pound units (or other units), the metric standard is identified by a letter M after the serial number; this standard contains "hard metric" units.

If a standard is written in inch-pound units (or other units) and acceptable metric units, the document is identified by a dual alphanumeric designation.

When reference is made to a standard, the *complete* designation should be given. Best practice is to state the *designation and title*.

The boldface number(s) following the title refer to the volume(s) of the *Annual Book of ASTM Standards* in which the standard appears.

This list includes only those standards which appear in the 2000 edition of each volume of the *Annual Book of ASTM Standards*. New and revised standards that were approved after the closing date for the volume are available as separate reprints and will be listed in next year's edition.

Each ASTM standard is available as a separate reprint from ASTM. Price and order information are available from ASTM Customer Service, 100 Barr Harbor Drive, West Conshohocken, PA 19428-2959, 610-832-9585.

D 1236 Discontinued 1963; Tolerances for Filament Nylon Yarns; Replaced by D 2497
D 1237 Discontinued 1963; Tolerances for Filament Rayon Yarns; Replaced by D 2497
D 1238–99 Test Method for Flow Rates of Thermoplastics by Extrusion Plastometer, **08.01**
D 1239–98 Test Method for Resistance of Plastic Films to Extraction by Chemicals, **08.01**
D 1240–96 Test Method for Rosin Acids Content of Naval Stores, Including Rosin, **06.03**
D 1241–68(1994)$^{\epsilon 1}$ Specification for Materials for Soil-Aggregate Subbase, Base, and Surface Courses, **04.08**
D 1242–95a Test Methods for Resistance of Plastic Materials to Abrasion, **08.01**
D 1243–95 Test Method for Dilute Solution Viscosity of Vinyl Chloride Polymers, **08.01**
D 1244–98 Practice for Designation of Yarn Construction, **07.01**
D 1245–84(1999) Practice for Examination of Water-Formed Deposits by Chemical Microscopy, **11.02**
D 1246–95 Test Method for Iodide and Bromide in Water, **11.01**
D 1247 Discontinued 1987; Method of Sampling Manufactured Gas
D 1248–98 Specification for Polyethylene Plastics Molding and Extrusion Materials, **08.01**
D 1249–92(1999) Specification for Octyl Ortho-Phthalate Ester Plasticizers, **08.01**
D 1250–80(1997)$^{\epsilon 1}$ Guide for Petroleum Measurement Tables, (Description only; tables published separately in 12 volumes), **05.01**
D 1251 Discontinued 1999; Test Method for Water Vapor Permeability of Packages by Cycle Method
D 1252–95 Test Methods for Chemical Oxygen Demand (Dichromate Oxygen Demand) of Water, **11.02**
D 1253–86(1996) Test Methods for Residual Chlorine in Water, **11.01**
D 1254 Discontinued 1981; Method of Test for Nitrite Ion in Water
D 1255 Discontinued 1968; Methods of Test for Sulfides in Industrial Water and Industrial Waste Water
D 1256 Discontinued 1967; Scheme for Analysis of Industrial Water and Industrial Waste Water
D 1257–90(1997) Specification for High-Gravity Glycerin, **06.04**
D 1258–95 Test Method for High-Gravity Glycerin, **06.04**
D 1259–85(1994) Test Methods for Nonvolatile Content of Resin Solutions, **06.01**
D 1260 Discontinued 1966; Method of Test for Color Difference Using the Hunter Multipurpose Reflectometer; Combined with D 2244
D 1261 Discontinued 1984; Method of Test for Effect of Grease on Copper
D 1262 Discontinued 1991; Test Method for Lead in New and Used Greases
D 1263–94(1999) Test Method for Leakage Tendencies of Automotive Wheel Bearing Greases, **05.01**
D 1264–96 Test Method for Determining the Water Washout Characteristics of Lubricating Greases, **05.01**
D 1265–97 Practice for Sampling Liquefied Petroleum (LP) Gases (Manual Method), **05.01**
D 1266–98 Test Method for Sulfur in Petroleum Products (Lamp Method), **05.01**
D 1267–95 Test Method for Vapor Pressure of Liquefied Petroleum (LP) Gases (LP-Gas Method), **05.01**
D 1268 Discontinued 1975; Method of Test for Unsaturated Light Hydrocarbons (Silver-Mercuric Nitrate Method)
D 1269 Discontinued 1975; Method of Test for Lead Antiknock Compounds in Gasoline (Polarographic Method)
D 1270 Discontinued 1959; Method of Test for Dimensional Changes of Paper with Changes in Moisture Conditions
D 1271 Discontinued 1970; Specification for Copperized Chromated Zinc Chloride
D 1272–56(1997)$^{\epsilon 1}$ Specification for Pentachlorophenol, **04.10**
D 1273 Discontinued 1970; Methods for Chemical Analysis of Copperized Chromated Zinc Chloride
D 1274–95(2000) Test Methods for Chemical Analysis of Pentachlorophenol, **04.10**
D 1275–96a Test Method for Corrosive Sulfur in Electrical Insulating Oils, **10.03**
D 1276 Discontinued 1985; Method of Test for Water Vapor Transmission of Shipping Containers by Cycle Method
D 1277 Discontinued 1972; Specification for Nonrigid Thermoplastic Compounds for Automotive and Aeronautical Applications
D 1278–91a(1997)$^{\epsilon 1}$ Test Methods for Rubber from Natural Sources—Chemical Analysis, **09.01**
D 1279 Discontinued 1999; Test Method for Buffering Action of Metal Cleaners
D 1280–00 Test Method of Total Immersion Corrosion Test for Soak Tank Metal Cleaners, **15.04**
D 1281 Discontinued 1989; Test Method for Rinsing Properties of Metal Cleaners
D 1282–96 Test Method for Resistance to Airflow as an Indication of Average Fiber Diameter of Wool Top, Card Sliver, and Scoured Wool, **07.01**
D 1283–85(1995)$^{\epsilon 1}$ Test Method for Alkali-Soluability of Wool, **07.01**
D 1284 Discontinued 1991; Test Methods for Relaxation and Consolidation Dimensional Changes of Stabilized Knit Wool Fabrics
D 1285 Discontinued 1967; Tolerances for Yarns Containing Wool; Replaced by D 2644, D 2645
D 1286 Discontinued 1983; Method of Test for Effect of Mold Contamination on Permanence of Adhesives Preparations and Adhesives Bonds; Replaced by D 4300
D 1287–91(1997)$^{\epsilon 1}$ Test Method for pH of Engine Coolants and Antirusts, **15.05**
D 1288 Discontinued 1985; Method of Test for Total Ash and Silica in Water-Emulsion Polishes
D 1289 Discontinued 1969; Method of Test for Nonvolatile Matter (Total Solids) in Water-Emulsion Waxes; Replaced by D 2834
D 1290–95 Test Method for Sediment in Water-Emulsion Polishes by Centrifuge, **15.04**
D 1291–89(1994)$^{\epsilon 1}$ Practice for Estimation of Chlorine Requirement or Demand of Water, or Both, **11.02**
D 1292–86(1995)$^{\epsilon 1}$ Test Method for Odor in Water, **11.01**
D 1293–95 Test Methods for pH of Water, **11.01**
D 1294–95a Test Method for Tensile Strength and Breaking Tenacity of Wool Fiber Bundles 1-in. (25.4-mm) Gage Length, **07.01**
D 1295 Discontinued 1978; Method of Test for Wrinkle Recovery of Textile Fabrics Using the Vertical Strip Apparatus
D 1296–93(1996) Test Method for Odor of Volatile Solvents and Diluents, **06.04**
D 1297 Discontinued 1967; Method of Test for No-Dirt-Retention Time of Traffic Paint
D 1298–99 Test Method for Density, Relative Density (Specific Gravity), or API Gravity of Crude Petroleum and Liquid Petroleum Products by Hydrometer Method, **05.01, 10.03**
D 1299 Discontinued 1992; Test Method for Shrinkage of Molded and Laminated Thermosetting Plastics at Elevated Temperature
D 1300 Discontinued 1963; Specification and Methods of Test for Laminated Thermosetting Decorative Sheets
D 1301–91(1999) Test Methods for Chemical Analysis of White Lead Pigments, **06.03**
D 1302 Discontinued 1968; Method for Analysis of Carbureted Water Gas by the Mass Spectrometer
D 1303 Discontinued 1986; Method of Test for Total Chlorine in Vinyl Chloride Polymers and Copolymers
D 1304–99 Test Methods for Adhesives Relative to Their Use as Electrical Insulation, **15.06**
D 1305–99 Specification for Electrical Insulating Paper and Paperboard—Sulfate (Kraft) Layer Type, **10.01**
D 1306–88(1996)$^{\epsilon 1}$ Test Method for Phthalic Anhydride Content of Alkyd Resins and Esters Containing Other Dibasic Acids (Gravimetric), **06.03**
D 1307 Discontinued 1982; Method of Test for Phthalic Anhydride Content of Alkyd Resins and Esters Containing Other Dibasic Acids (Spectrophotometric)
D 1308–87(1998) Test Method for Effect of Household Chemicals on Clear and Pigmented Organic Finishes, **06.02**
D 1309–93(1998) Test Method for Settling Properties of Traffic Paints During Storage, **06.02**
D 1310–86(1997)$^{\epsilon 1}$ Test Method for Flash Point and Fire Points of Liquids by Tag Open-Cup Apparatus, **06.01**
D 1311 Discontinued 1968; Method of Test for Viscosity Reduction Power of Hydrocarbon Solvents
D 1312–93(1998) Test Methods for Apparent Free Phenols in Synthetic Phenolic Resins or Solutions Used for Coating Purposes, **06.03**
D 1313 Discontinued 1988; Method of Test for Sludge Formation in Mineral Transformer Oil by High-Pressure Oxidation Bomb
D 1314 Discontinued 1965; Method of Test for Sludge Formation in Mineral Transformer Oil by Sludge Accumulation; Replaced by D 2440
D 1315 Discontinued 1981; Method of Test for Water in Insulating Oils by Extraction
D 1316–93(1996) Test Method for Fineness of Grind of Printing Inks by the NPIRI Grindometer, **06.02**
D 1317 Discontinued 1994; Test Method for Chlorine in New and Used Lubricants (Sodium Alcoholate Method)
D 1318 Discontinued 1992; Test Method for Sodium in Residual Fuel Oil (Flame Photometric Method)
D 1319–98 Test Method for Hydrocarbon Types in Liquid Petroleum Products by Fluorescent Indicator Adsorption, **05.01**
D 1320 Discontinued 1991; Test Method for Tensile Strength of Paraffin Wax
D 1321–97 Test Method for Needle Penetration of Petroleum Waxes, **05.01**
D 1322–97 Test Method for Smoke Point of Aviation Turbine Fuels, **05.01**
D 1323 Discontinued 1980; Methods of Test for Mercaptan Sulfur in Aviation Turbine Fuels; Replaced by D 3227
D 1324–83(1993)$^{\epsilon 1}$ Specification for Modified Wood, **04.10**
D 1325–94(2000) Specification for Ammoniacal Copper Arsenate and Ammoniacal Copper Zinc Arsenate, **04.10**
D 1326–94(2000) Test Method for Chemical Analysis of Ammoniacal Copper Arsenate and Ammoniacal Copper Zinc Arsenate, **04.10**
D 1327–97a Specification for Bitumen-Saturated Woven Burlap Fabrics Used in Roofing and Waterproofing, **04.04**
D 1328 Discontinued 1992; Test Method for Staining Properties of AsphaltReplaced by D 2746
D 1329–88(1998) Test Method for Evaluating Rubber Property—Retraction at Lower Temperatures (TR Test), **09.01**
D 1330–85(1995)$^{\epsilon 1}$ Specification for Rubber Sheet Gaskets, **09.02**
D 1331–89(1995) Test Methods for Surface and Interfacial Tension of Solutions of Surface-Active Agents, **15.04**
D 1332 Discontinued 1972; Methods of Test for Build-Up and Spread of Glass Yarn As Wrap (Serving) or Braid Over Electrical Conductors; Replaced by D 668

D 6347/D6347M–99 Test Method for Determination of Bulk Density of Coal Using Nuclear Backscatter Depth Density Methods, **05.06**
D 6348–98 Test Method for Determination of Gaseous Compounds by Extractive Direct Interface Fourier Transform Infrared FTIR Spectroscopy, **11.03**
D 6349–99 Test Method for Determination of Major and Minor Elements in Coal, Coke, and Solid Residues from Combustion of Coal and Coke by Inductively Coupled Plasma—Atomic Emission Spectrometry, **05.06**
D 6350–98 Test Method for Mercury Sampling and Analysis in Natural Gas by Atomic Fluorescence Spectroscopy, **05.06**
D 6351–99 Test Method for Determination of Low Temperature Fluidity and Appearance of Hydraulic Fluids, **05.04**
D 6352–98 Test Method for Boiling Range of Distribution of Petroleum Distillates in Boiling Range from 174 to 700°C by Gas Chromatography, **05.04**
D 6353–98 Guide for Sampling Plan and Core Sampling of Prebaked Anodes Used in Aluminum Production, **05.04**
D 6354–98 Guide for Sampling Plan and Core Sampling of Carbon Cathode Blocks Used in Aluminum Production, **05.04**
D 6355–98 Test Method for Human Repeat Insult Patch Testing of Medical Gloves, **09.02**
D 6356–98 Test Method for Hydrogen Gas Generation of Aluminum Emulsified Asphalt Used as a Protective Coating for Roofing, **04.04**
D 6357–99 Test Methods for Determination of Trace Elements in Coal, Coke, and Combustion Residues from Coal Utilization Processes by Inductively Coupled Plasma Atomic Emission Spectrometry, Inductively Coupled Plasma Mass Spectrometry, and Graphite Furnace Atomic Absorption Spectrometry, **05.06**
D 6358–99 Classification System for Poly (Phenylene Sulfide) Injection Molding and Extrusion Materials Using ISO Methods, **08.03**
D 6359–99 Specification for Minimum Retroflectance of Newly Applied Pavement Marking Using Portable Hand-Operated Instruments, **04.03**
D 6360–99 Practice for Enclosed Carbon-Arc Exposures of Plastics, **08.03**
D 6361–98 Guide for Selecting Cleaning Agents and Processes, **15.05**
D 6362–98 Practice for Certificates of Reference Materials for Water Analysis, **11.01**
D 6363–98 Test Method for Determination of Hydrogen Peroxide and Combined Organic Peroxides in Atmospheric Water Samples by Peroxidase Enzyme Fluorescence Method, **11.03**
D 6364–99 Test Method for Determining the Short Term Compression Behavior of Geosynthetics, **04.09**
D 6365–99 Practice for Nondestructive Testing of Geomembrane Seams Using the Spark Test, **04.09**
D 6366–99 Test Method for Total Trace Nitrogen and Its Derivatives in Liquid Aromatic Hydrocarbons by Oxidative Combustion and Electrochemical Detection, **06.04**
D 6367–99 Specification for AMS (-Methylstyrene), **06.04**
D 6368–00 Specification for Vapor-Degreasing Grade and General Grade *normal*-Propyl Bromide, **15.05**
D 6369–99 Guide for Design of Standard Flashing Details for EPDM Roof Membranes, **04.04**
D 6370–99 Test Method for Rubber—Compositional Analysis by Thermogravimetry (TGA), **09.01**
D 6371–99 Test Method for Cold Filter Plugging Point of Diesel and Heating Fuels, **05.04**
D 6372–99a Practice for Design, Testing, and Construction of Micro-Surfacing, **04.03**
D 6373–99 Specification for Performance Graded Asphalt Binder, **04.03**
D 6374–99 Test Method for Volatile Matter in Green Petroleum Coke Quartz Crucible Procedure, **05.04**
D 6375–99a Test Method for Evaporation Loss of Lubricating Oils by Thermogravimetric Analyzer (TGA) Noack Method, **05.04**
D 6376–99 Test Method for Determination of Trace Metals in Petroleum Coke by Wavelength Dispersive X-Ray Fluorescence Spectroscopy, **05.04**
D 6377–99 Test Method for Determination of Vapor Pressure of Crude Oil: VPCR (Expansion Method), **05.04**
D 6378–99 Test Method for Determination of Vapor Pressure (VP) of Petroleum Products, Hydrocarbons, and Hydrocarbon—Oxygenate Mixtures (Triple Expansion Method), **05.04**
D 6379–99 Test Method for Determination of Aromatic Hydrocarbon Types in Aviation Fuels and Petroleum Distillates—High Performance Liquid Chromatography Method with Refractive Index Detection, **05.04**
D 6380–00 Specification for Asphalt Roll Roofing (Organic Felt), **04.04**
D 6381–99 Test Method for Measurement of Asphalt Shingle Tab Mechanical Uplift Resistance, **04.04**
D 6382–98 Practice for Dynamic Mechanical Analysis and Thermogravimetry of Roofing and Waterproofing Membrane Material, **04.04**
D 6383–99 Practice for Time-to-Failure (Creep-Rupture) of Adhesive Joints Fabricated from EPDM Roof Membrane Material, **04.04**
D 6384–99a Terminology Relating to Biodegradability and Ecotoxicity of Lubricants, **05.04**
D 6385–99 Test Method for Determining Acid Extractable Content in Activated Carbon by Ashing, **15.01**
D 6386–99 Practice for Preparation of Zinc (Hot-Dip Galvanized) Coated Iron and Steel Product and Hardware Surfaces for Painting, **06.02**
D 6387–99 Test Methods for Composition of Turpentine and Related Terpene Products By Capillary Gas Chromatography, **06.03**
D 6388–99 Practice for Tests to Evaluate the Chemical Resistance of Geonets to Liquids, **04.09**
D 6389–99 Practice for Tests to Evaluate the Chemical Resistance of Geotextiles to Liquids, **04.09**
D 6390–99 Test Method for Determination of Draindown Characteristics in Uncompacted Asphalt Mixtures, **04.03**
D 6391–99 Test Method for Field Measurement of Hydraulic Conductivity Limits of Porous Materials Using Two Stages of Infiltration from a Borehole, **04.09**
D 6392–99 Test Method for Determining Integrity of Nonreinforced Geomembrane Seams Produced Using Thermo-Fusion Methods, **04.09**
D 6393–99 Test Method for Bulk Solids Characterization by Carr Indices, **04.09**
D 6394–99 Specification for Sulfone Plastics (SP), **08.03**
D 6395–99 Test Method for Flatwise Flexural Impact Resistance of Rigid Plastics, **08.03**
D 6396–99 Test Method for Testing of Pipe Thread Sealants on Pipe Tees, **15.06**
D 6399–99 Guide for Selecting Instruments and Methods for Measuring Air Quality in Aircraft Cabins, **11.03**
D 6400–99 Specification for Compostable Plastics, **08.03**
D 6401–99 Test Method for Determining Non-Tannins and Tannin in Extracts of Vegetable Tanning Materials, **15.04**
D 6402–99 Test Method for Determining Soluble Solids and Insolubles in Extracts of Vegetable Tanning Materials, **15.04**
D 6403–99 Test Method for Determining Moisture in Raw and Spent Materials, **15.04**
D 6404–99 Practice for Sampling Vegetable Materials Containing Tannin, **15.04**
D 6405–99 Practice for Extraction of Tannina from Raw and Spent Materials, **15.04**
D 6406–99 Test Method for Analysis of Sugar in Vegetable Tanning Materials, **15.04**
D 6407–99 Test Method for Analysis of Iron and Copper in Vegetable Tanning Materials, **15.04**
D 6408–99 Test Method for Analysis of Tannery Liquors, **15.04**
D 6409–99 Practice for Color Tests with Sheepskin Skivers, **15.04**
D 6410–99 Test Method for Determining Acidity of Vegetable Tanning Liquors, **15.04**
D 6411/D6411M–99 Specification for Silicone Rubber Room Temperature Vulcanizing Low Outgassing Materials, **15.06**
D 6412/D6412M–99 Specification for Epoxy (Flexible) Adhesive for Bonding Metallic and Nonmetallic Materials, **15.06**
D 6413–99 Test Method for Flame Resistance of Textiles (Vertical Test), **07.02**
D 6414–99 Test Methods for Total Mercury in Coal and Coal Combustion Residues by Acid Extraction or Wet Oxidation/Cold Vapor Atomic Absorption, **05.06**
D 6415–99 Test Method for Measuring the Curved Beam Strength of a Fiber-Reinforced Polymer-Matrix Composite, **15.03**
D 6416–99 Test Method for Two-Dimensional Flexural Properties of Simply Supported Sandwich Composite Plates Subjected to a Distributed Load, **15.03**
D 6417–99 Test Method for Estimation of Engine Oil Volatility by Capillary Gas Chromatography, **05.04**
D 6418–99$^{\varepsilon 1}$ Practice for Using the Disposable En Core Sampler for Sampling and Storing Soil for Volatile Organic Analysis, **11.04**
D 6419–99 Test Method for Volatile Content of Non-Heatset Web Offset Printing Inks, **06.02**
D 6420–99 Test Method for Determination of Gaseous Organic Compounds by Direct Interface Gas Chromatography-Mass Spectrometry, **11.03**
D 6421–99 Test Method for Evaluating Automotive Spark-Ignition Engine Fuel for Electronic Port Fuel Injector Fouling by Bench Procedure, **05.04**
D 6422–99 Test Method for Water Tolerance (Phase Separation) of Gasoline-Alcohol Blends, **05.04**
D 6423–99 Test Method for Determination of pH of Ethanol, Denatured Fuel Ethanol, and Fuel Ethanol (Ed75-Ed85), **05.04**
D 6424–99 Practice for Octane Rating–Naturally Aspirated Spark Ignition Aircraft Engines, **05.04**
D 6425–99 Test Method for Measuring Friction and Wear Properties of Extreme Pressure (EP) Lubricating Oils Using SRV Test Machine, **05.04**
D 6426–99 Test Method for Determining Filterability of Distillate Fuel Oils, **05.04**
D 6427–99 Practice for Handling, Transportation, and Storage of HFC-236fa, 1,1,1,3,3,3-Hexafluoropropane (CF3CH2CF3), **15.05**
D 6428–99 Test Method for Total Sulfur in Liquid Aromatic Hydrocarbons and Their Derivatives by Oxidative Combustion and Electrochemical Detection, **06.04**
D 6429–99 Guide for Selecting Surface Geophysical Methods, **04.09**
D 6430–99 Guide for Using the Gravity Method for Subsurface Investigation, **04.09**
D 6431–99 Guide for Using the Direct Current Resistivity Method for Subsurface Investigation, **04.09**
D 6432–99 Guide for Using the Surface Ground Penetrating Radar Method for Subsurface Investigation, **04.09**
D 6433–99 Practice for Roads and Parking Lots Pavement Condition Index Surveys, **04.03**
D 6434–99 Guide for Selection of Test Methods for Flexible Polypropylene fPP Geomembranes, **04.09**
D 6435–99 Test Method for Shear Properties of Plastic Lumber and Plastic Lumber Shapes, **08.03**

EXHIBIT 29

ANNUAL BOOK OF ASTM STANDARDS

2001

SECTION 00

Index



VOLUME 00.01

Subject Index; Alphanumeric List



Revision issued annually

dj 13



Editorial Staff

Managers:
Joan L. Cornillot
Paula C. Fazio-Fluehr

Senior Indexer:
H. Joel Shupak

Editors:
Nicole C. Baldini
Eleanor Barkley
Lauren M. Brecht
Christine M. Leinweber
Vernice A. Mayer
Patricia A. McGee
Kathleen A. Peters
Emilie A. Whealen
Richard F. Wilhelm

Editorial Assistants:
Sean Bailey
Sheba T. King
Jessica L. Rosiak
Julie Wright

Library of Congress Catalog Card Number: 83-641658

ISBN 0-8031-3039-2 (set)
ISBN (section)
ISBN 0-8031-3038-4 (volume)

Copyright ©2001 AMERICAN SOCIETY FOR TESTING AND MATERIALS, West Conshohocken, PA. Prior editions copyrighted 2000 and earlier, by the American Society for Testing and Materials. All rights reserved. This material may not be reproduced or copied, in whole or in part, in any printed, mechanical, electronic, film, or other distribution and storage media, without the written consent of the publisher.

ORDER INFORMATION: Additional copies of this book in print, on CD-ROM, or reprints (single or multiple copies) of individual standards may be obtained by contacting ASTM at the above address or at 610-832-9585 (phone), 610-832-9555 (fax), service@astm.org (email), or through www.astm.org (website).

Photocopy Rights

Authorization to photocopy items for internal, personal, or educational classroom use, or the internal, personal, or educational classroom use of specific clients, is granted by the American Society for Testing and Materials (ASTM) provided that the appropriate fee is paid to the Copyright Clearance Center, 222 Rosewood Drive, Danvers, MA 01923, Tel: 978-750-8400; online:http://www.copyright.com/

Printed in Baltimore, MD, U.S.A.

83641658

Alphanumeric List

ASTM Standards

Standards:

Specifications	2970
Test Methods	7923
Terminology	224
Total	11117

Each ASTM standard has a unique serial designation. It is comprised of a capital letter indicating general classification (A, ferrous metals; B, nonferrous metals; C, cementitious, cermanic, concrete, and masonry materials; D, miscellaneous materials; E, miscellaneous subjects; F, materials for specific applications; G, corrosion, deterioration, and degradation of materials; ES, emergency standards; P, proposals; PS, provisional standards), a serial number (one to four digits), a dash, and the year of issue.

In each serial designation, the number following the dash indicates the year of original adoption as standard or, in the case of revision, the year of last revision. Thus, standards adopted or revised during the year 2001 have as their final number, 01. A letter following this number indicates more than one revision during that year, that is 01a indicates the second revision in 2001, 01b the third revision, etc. Standards that have been reapproved without change are indicated by the year of last reapproval in parentheses as part of the designation number, for example, (2001). A superscript epsilon indicates an editorial change since the last revision or reapproval; $\epsilon 1$ for the first change, $\epsilon 2$ for the second, etc.

If a standard is written in acceptable metric units and has a companion standard written in inch-pound units (or other units), the metric standard is identified by a letter M after the serial number; this standard contains "hard metric" units.

If a standard is written in inch-pound units (or other units) and acceptable metric units, the document is identified by a dual alphanumeric designation.

When reference is made to a standard, the *complete* designation should be given. Best practice is to state the *designation and title*.

The boldface number(s) following the title refer to the volume(s) of the *Annual Book of ASTM Standards* in which the standard appears.

This list includes only those standards which appear in the 2001 edition of each volume of the *Annual Book of ASTM Standards*. New and revised standards that were approved after the closing date for the volume are available as separate reprints and will be listed in next year's edition.

Each ASTM standard is available as a separate reprint from ASTM. Price and order information are available from ASTM Customer Service, 100 Barr Harbor Drive, West Conshohocken, PA 19428-2959, 610-832-9585.

Short-Term Exposure to Volatile Organic Chemicals Emitted from Bedding Sets, **11.03**

D 6486–99 Practice for Short Term Vehicle Service Exposure of Automotive Coatings, **06.02**

D 6487–99ε[1] Practice for Preparing Prints of Paste Printing Inks with the Little Joe Offset Color Proofing Press, **06.02**

D 6488–99 Terminology Relating to Print Problems, **06.02**

D 6489–99 Test Method for Determining the Water Absorption of Hardened Concrete Treated with a Water Repellent Coating, **06.02**

D 6490–99 Test Method for Water Vapor Transmission o Nonfilm Forming Treatments Used on Cementitious Panels, **06.02**

D 6491–99 Practice for Evaluation of Aging Resistance of Prestressed Prepainted Metal in a Dry Heat Test, **06.02**

D 6492–99 Practice for Detection of Hexavalent Chromium on Zinc and Zinc/Aluminum Alloy Coated Steel, **06.02**

D 6493–99 Test Methods for Softening Point of Hydrocarbon Resins by Automated Ring and Ball Apparatus, **06.03**

D 6494–99 Test Method for Determination of Asphalt Fume Particulate Matter in Workplace Atmospheres as Benzene Soluble Fraction, **11.03**

D 6495–99 Guide for Acceptance Testing Requirements for Geosynthetic Clay Liners, **04.09**

D 6496–99 Test Method for Determining Average Bonding Peel Strength Between the Top and Bottom Layers of Needle-Punched Geosynthetic Clay Liners, **04.09**

D 6497–99 Guide for Mechanical Attachment of Geomembrane to Penetrations or Structures, **04.09**

D 6498–99 Guide for Household Hazardous Waste Training Outline for Household Hazardous Waste Collection Operations, **11.04**

D 6499–00 Test Method for Immunological Measurement of Antigenic Protein in Natural Rubber and its Products, **09.02**

D 6500–00 Test Method for Diameter of Wool and Other Animal Fibers Using an Optical Fibre Diameter Analyser, **07.02**

D 6501–99 Test Method for Phosphonate in Brines, **11.01**

D 6502–99 Test Method for On-Line Measurement of Low Level Particulate and Dissolved Metals in Water by X-Ray Fluorescence XRF, **11.01**

D 6503–99 Test Method for Enterococci in Water Using Enterolet, **11.02**

D 6504–00 Practice for On-Line Determination of Cation Conductivity in High Purity Water, **11.01**

D 6505–00 Test Method for Assay of *normal*-Propyl Bromide Content, **15.05**

D 6506–00 Specification for Asphalt Based Protection Board for Below-Grade Waterproofing, **04.04**

D 6507–00 Practice for Fiber Reinforcement Orientation Codes for Composite Materials, **15.03**

D 6508–00 Test Method for Determination of Dissolved Inorganic Anions in Aqueous Matrices Using Capillary Ion Electrophoresis and Chromate Eletrolute, **11.02**

D 6509–00 Specification for Atactic Polypropylene (APP) Modified Bituminous Base Sheet Materials Using Glass Fiber Reinforcements, **04.04**

D 6510–00 Guide for Selection of Asphalt Used in Built-Up Roofing Systems, **04.04**

D 6511–00 Test Methods for Solvent Bearing Bituminous Compounds, **04.04**

D 6512–00 Practice for Interlaboratory Quantitation Estimate, **11.01**

D 6513–00 Practice for Calculating the Superimposed Load on Wood-Frame Walls for Standard Fire Endurance Tests, **04.10**

D 6514–00 Test Method for High Temperature Universal Oxidation Test for Turbine Oils, **05.04**

D 6515–00 Test Method for Rubber Shaft Seals Determination of Recovery from Bending, **09.02**

D 6517–00 Guide for Field Preservation of Ground-Water Samples, **04.09**

D 6518–01 Practice for Bias Testing a Mechanical Coal Sampling System, **05.06**

D 6519–00 Practice for Sampling of Soil Using the Hydraulically Operated Stationary Piston Sampler, **04.09**

D 6520–00 Practice for Solid Phase Micro Extraction (SPME) of Water and its Headspace for the Analysis of Volatle and Semi-Volatile Organic Compounds, **11.02**

D 6521–00 Practice for Accelerated Aging of Asphalt Binder Using a Pressurized Aging Vessel (PAV), **04.03**

D 6522–00 Test Method for Determination of Nitrogen Oxides, Carbon Monoxide, and Oxygene Concentrations in Emissions from Natural Gas-Fired Reciprocating Engines, Combustion Turbines, Boilers, and Process Heaters Using Portable Analyzers, **11.03**

D 6523–00 Guide for Evaluation and Selection of Alternative Daily Covers ADCs for Sanitary Landfills, **04.09**

D 6524–00 Test Method for Measuring the Resiliency of Turf Reinforcement Mats TRMs, **04.09**

D 6525–00 Test Method for Measuring Nominal Thickness of Permanent Rolled Erosion Control Products, **04.09**

D 6526–00 Test Method for Analysis of Toluene by Capillary Column Gas Chromatography, **06.04**

D 6527–00 Test Method for Determining Unsaturated and Saturated Hydraulic Conductivity in Porous Media by Steady-State Centrifugation, **04.09**

D 6528–00 Test Method for Consolidated Undrained Direct Simple Shear Testing of Cohesive Soils, **04.09**

D 6529–00 Test Method for Operating Performance of Continuous Electrodeionization Systems on Feeds from 50-1000 µS/cm, **11.02**

D 6530–00 Test Method for Total Active Biomass in Cooling Tower Waters (Kool Kount Assay; KKA), **11.02**

D 6531–00 Test Method for Relative Tinting Strength of Aqueous Ink Systems by Instrumental Measurement, **06.02**

D 6532–00 Test Method for Evaluation of the Effect of Clear Water Repellent Treatments on Water Absorption of Hydraulic Cement Mortar Specimens, **06.02**

D 6534–00 Test Method for Determining the Peak Force-to-Actuate a Mechanical Pump Dispenser, **15.09**

D 6535–00 Test Method for Determining the Dip Tube Length of a Mechanical Pump Dispenser, **15.09**

D 6536–00 Test Method for Measuring the Dip Tube Length of a Mechanical Pump Dispenser, **15.09**

D 6537–00 Practice for Instrumented Package Shock Testing for Determination of Package Performance, **15.09**

D 6538–00 Guide for Sampling Wastewater With Automatic Samplers, **11.04**

D 6539–00 Test Method for Measurement of Pneumatic Permeability of Partially Saturated Porous Materials by Flowing Air, **04.09**

D 6540–00 Test Method for Accelerated Soiling of Pile Yarn Floor Covering, **07.02**

D 6541–00 Specification for HFC-236fa, 1,1,1,3,3,3–Hexafluoropropane, ($CF_3CH_2CF_3$), **15.05**

D 6542–00 Practice for Tonnage Calculation of Coal in a Stockpile, **05.06**

D 6543–00ε[1] Guide to Evaluation of Measurements Made by On-Line Coal Analyzers, **05.06**

D 6544–00 Practice for Preparation of Textiles Prior to UV Transmission Testing, **07.02**

D 6545–00 Test Method for Flammability of Textiles Used In Children's Sleepwear, **07.02**

D 6546–00 Test Methods for Suggested Limits for Determining Compatability of Elastomer Seals for Industrial Hydraulic Fluid Applications, **05.04**

D 6547–00 Test Method for Corrosiveness of a Lubricating Fluid to a Bi-Metallic Couple, **05.04**

D 6548–00 Test Method for Resistance to Mechanical Penetration of Sanitary Tissue Papers (Ball Burst Procedure), **15.09**

D 6549–00 Test Method for Determination of Cooling Characteristics of Quenchants by Cooling Curve Analysis with Agitation (Drayton Unit), **05.04**

D 6550–00 Test Method for Determination of Olefin Content of Gasolines by Supercritical-Fluid Chromatography, **05.04**

D 6551–00 Practice for Accelerated Weathering of Pressure-Sensitive Tapes by Xenon-Arc Exposure Apparatus, **15.09**

D 6552–00 Practice for Controlling and Characterizing Errors in Weighing Collected Aerosols, **11.03**

D 6553–00 Test Method for Coolant Compatability of Way Lubricants, **05.04**

D 6554–00 Performance Specification for 100 % Cotton Denim Fabrics, **07.02**

D 6555–00a Guide for Evaluating System Effects in Repetitive-Member Wood Assemblies, **04.10**

D 6556–00a Test Method for Carbon Black—Total and External Surface Area by Nitrogen Adsorption, **09.01**

D 6557–00 Test Method for Evaluation of the Rust Preventive Characteristics of Automotive Engine Oils, **05.04**

D 6558–00 Test Method for Determination of TGA CO2 Reactivity of Baked Carbon Anodes and Cathode Blocks, **05.04**

D 6559–00 Test Method for Determination of TGA Air Reactivity of Baked Carbon Anodes and Cathode Blocks, **05.04**

D 6560–00 Test Method for Determination of Asphaltenes (Heptane Insolubles) in Crude Petroleum and Petroleum Products, **05.04**

D 6561–00 Test Method for Determination of Aerosol Monomeric and Oligomeric Hexamethylene Diisocyanate (HDI) in Air with (Methoxy-2 Phenyl-1) Piperazine (MOPIP) in the Workplace, **11.03**

D 6562–00 Test Method for Determination of Gaseous Hexamethylene Diisocyanate (HDI) in Air with 9-(N-Methylaminomethyl) Anthracene Method (MAMA) in the Workplace, **11.03**

D 6563–00 Test Method for Benzene, Toluene, Xylene, (BTX) Concentrates Analysis by Capillary Column Gas Chromatography, **06.04**

D 6564–00 Guide for Field Filtration of Ground-Water Samples, **04.09**

D 6565–00 Test Method for Determination of Water (Moisture) Content in Soil by the Time-Domain Reflectometry (TDR) Method, **04.09**

D 6566–00 Test Method for Measuring Mass per Unit Area of Turf Reinforcement Mats, **04.09**

D 6567–00 Test Method for Measuring the Light Penetration of a Turf Reinforcement Mat TRM, **04.09**

D 6568–00 Guide for Planning, Carrying Out, and Reporting Traceable Chemical Analysis of Water Samples, **11.01**

D 6569–00 Test Method for On-Line Measurement of pH, **11.01**

D 6570–00a Practice for Assigning Allowable Properties for Mechanically-Graded Lumber, **04.10**

D 6571–00 Test Method for Determination of Compression Resistance and Recovery Properties of Highloft Nonwoven Fabric Using Static Force Loading, **07.02**

D 6572–00 Test Method for Determining Dispersive Characteristics of Clayey Soils by the Crumb Test, **04.09**

D 6573/D6573M–00ε[1] Specification for General Purpose Wirebound Shipping Boxes, **15.09**

D 6574–00 Test Method for Determining the In-Plane Hydraulic Transmissivity of a Geosynthetic by Radial Flow, **04.09**

D 6575–00 Test Method for Determining Stiffness of Geosynthetics Used as Turf Reinforcement Mats TRMs, **04.09**

D 6576–00 Specification for Flexible Cellular Rubber Chemically Blown, **08.03**

D 6577–00 Guide for Testing Industrial Protective Coatings, **06.02**

D 6578–00 Practice for Determination of Graffiti Resistance, **06.02**

D 6579–00 Practice for Molecular Weight Averages and Molecular Weight

Nonmetallic Materials Using Concentrated Natural Sunlight, **14.04**
G 91–97 Practice for Monitoring Atmospheric SO_2 Using Sulfation Plate Technique, **03.02**
G 92–86(1997)ε[1] Practice for Characterization of Atmospheric Test Sites, **03.02**
G 93–96 Practice for Cleaning Methods for Material and Equipment Used in Oxygen-Enriched Environments, **14.04**
G 94–92(1998) Guide for Evaluating Metals for Oxygen Service, **14.04**
G 95–87(1998)ε[1] Test Method for Cathodic Disbondment Test of Pipeline Coatings (Attached Cell Method), **06.02**
G 96–90(1996)ε[1] Guide for On-Line Monitoring of Corrosion in Plant Equipment (Electrical and Electrochemical Methods), **03.02**
G 97–97 Test Method for Laboratory Evaluation of Magnesium Sacrificial Anode Test Specimens for Underground Applications, **03.02**
G 98–91(1996)ε[1] Test Method for Galling Resistance of Materials, **03.02**
G 99–95a(2000)ε[1] Test Method for Wear Testing With a Pin-On-Disk Apparatus, **03.02**
G 100–89(1999) Test Method for Conducting Cyclic Galvanostaircase Polarization, **03.02**
G 101–01 Guide for Estimating the Atmospheric Corrosion Resistance of Low-Alloy Steels, **03.02**
G 102–89(1999) Practice for Calculation of Corrosion Rates and Related Information from Electrochemical Measurements, **03.02**
G 103–97 Test Method for Performing a Stress-Corrosion Cracking Test of Low Copper Containing Al-Zn-Mg Alloys in Boiling 6 % Sodium Chloride Solution, **03.02**
G 104 Discontinued 1998; Test Method for Assessing Galvanic Corrosion Caused by the Atmosphere; Replaced by G 116 and G 149
G 105–89(1997)ε[1] Test Method for Conducting Wet Sand/Rubber Wheel Abrasion Tests, **03.02**
G 106–89(1999) Practice for Verification of Algorithm and Equipment for Electrochemical Impedance Measurements, **03.02**
G 107–95 Guide for Formats for Collection and Compilation of Corrosion Data for Metals for Computerized Database Input, **03.02**
G 108–94(1999) Test Method for Electrochemical Reactivation (EPR) for Detecting Sensitization of AISI Type 304 and 304L Stainless Steels, **03.02**
G 109–99aε[1] Test Method for Determining the Effects of Chemical Admixtures on the Corrosion of Embedded Steel Reinforcement in Concrete Exposed to Chloride Environments, **03.02**
G 110–92(1997) Practice for Evaluating Intergranular Corrosion Resistance of Heat Treatable Aluminum Alloys by Immersion in Sodium Chloride + Hydrogen Peroxide Solution, **03.02**
G 111–97 Guide for Corrosion Tests in High Temperature or High Pressure Environment, or Both, **03.02**
G 112–92(1997) Guide for Conducting Exfoliation Corrosion Tests in Aluminum Alloys, **03.02**
G 113–94 Terminology Relating to Natural and Artificial Weathering Tests of Nonmetallic Materials, **14.04**
G 114–98 Practice for Aging Oxygen-Service Materials Prior to Flammability Testing, **14.04**
G 115–98 Guide for Measuring and Reporting Friction Coefficients, **03.02**
G 116–99 Practice for Conducting Wire-on-Bolt Test for Atmospheric Galvanic Corrosion, **03.02**
G 117–98 Guide for Calculating and Reporting Measures of Precision Using Data from Interlaboratory Wear or Erosion Tests, **03.02**
G 118–96 Guide for Recommended Format of Wear Test Data Suitable for Databases, **03.02**
G 119–93(1998) Guide for Determining Synergism Between Wear and Corrosion, **03.02**
G 120–95(2001) Practice for Determination of Soluble Residual Contamination in Materials and Components by Soxhlet Extraction, **14.04**
G 121–98 Practice for Preparation of Contaminated Test Coupons for the Evaluation of Cleaning Agents, **14.04**
G 122–96 Test Method for Evaluating the Effectiveness of Cleaning Agents, **14.04**
G 123–00 Test Method for Evaluating Stress-Corrosion Cracking of Stainless Alloys with Different Nickel Content in Boiling Acidified Sodium Chloride Solution, **03.02**
G 124–95 Test Method for Determining the Combustion Behavior of Metallic Materials in Oxygen-Enriched Atmospheres, **14.04**
G 125–00 Test Method for Measuring Liquid and Solid Material Fire Limits in Gaseous Oxidants, **14.04**
G 126–00 Terminology Relating to Compatibility and Sensitivity of Materials in Oxygen Enriched Environments, **14.04**
G 127–95(2000) Guide for Selection of Cleaning Agents for Oxygen Systems, **14.04**
G 128–95 Guide for Control of Hazards and Risks in Oxygen Enriched Systems, **14.04**
G 129–00 Practice for Slow Strain Rate Testing to Evaluate the Susceptibility of Metallic Materials to Environmentally Assisted Cracking, **03.02**
G 130–95 Test Method for Calibration of Narrow and Broad Band Ultraviolet Radiometers Using a Spectroradiometer, **14.04**
G 131–96 Practice for Cleaning of Materials and Components by Ultrasonic Techniques, **14.04**
G 132–96 Test Method for Pin Abrasion Testing, **03.02**
G 133–95 Test Method for Linearly-Reciprocating Ball-On-Flat Sliding Wear, **03.02**
G 134–95(2001)ε[1] Test Method for Erosion of Solid Materials by a Cavitating Liquid Jet, **03.02**
G 135–95(2001) Guide for Computerized Exchange of Corrosion Data for Metals, **03.02**
G 136–96 Practice for Determination of Soluble Residual Contaminants in Materials by Ultrasonic Extraction, **14.04**
G 137–97 Test Method for Ranking Resistance of Plastic Materials to Sliding Wear Using a Block-On-Ring Configuration, **03.02**
G 138–96 Test Method for Calibration of a Spectroradiometer Using a Standard Source of Irradiance, **14.04**
G 139–96 Test Method for Determining Stress-Corrosion Cracking Resistance of Heat-Treatable Aluminum Alloy Products Using the Breaking Load Method, **03.02**
G 140–96 Test Method for Determining Atmospheric Chloride Deposition Rate by Wet Candle Method, **03.02**
G 141–96 Guide for Addressing Variability in Exposure Testing on Nonmetallic Materials, **14.04**
G 142–98 Test Method for Determination of Susceptibility of Metals to Embrittlement in Hydrogen Containing Environments at High Pressure, High Temperature, or Both, **03.02**
G 143–96 Test Method for Measurement of Web/Roller Friction Characteristics, **03.02**
G 144–96 Test Method for Determination of Residual Contamination of Materials and Components by Total Carbon Analysis Using a High-Temperature Combustion Analyzer, **14.04**
G 145–96 Guide for Studying Fire Incidents in Oxygen Systems, **14.04**
G 146–96 Practice for Evaluation of Disbonding of Bimetallic Stainless Alloy/Steel Plate for Use in High-Pressure, High-Temperature Refinery Hydrogen Service, **03.02**
G 147–96 Practice for Conditioning and Handling of Nonmetallic Materials for Natural and Artificial Weathering Tests, **14.04**
G 148–97 Practice for Evaluation of Hydrogen Uptake, Permeation, and Transport in Metals by an Electrochemical Technique, **03.02**
G 149–97 Practice for Conducting the Washer Test for Atmospheric Galvanic Corrosion, **03.02**
G 150–99 Test Method for Electrochemical Critical Pitting Temperature Testing of Stainless Steels, **03.02**
G 151–00 Practice for Exposing Nonmetallic Materials in Accelerated Test Devices That Use Laboratory Light Sources, **14.04**
G 152–00a Practice for Operating Open Flame Carbon Arc Light Apparatus For Exposure of Nonmetllic Materials, **14.04**
G 153–00a Practice for Operating Enclosed Carbon Arc Light Apparatus for Exposure of Nonmetallic Materials, **14.04**
G 154–00a Practice for Operating Fluorescent Light Apparatus for UV Exposure of Nonmetallic Materials, **14.04**
G 155–00a Practice for Operating Xenon Arc Light Apparatus for Exposure of Nonmetallic Materials, **14.04**
G 156–97 Practice for Selecting and Characterizing Weathering Reference Materials Used to Monitor Consistency of Conditions in an Exposure Test, **14.04**
G 157–98 Guide for Evaluating the Corrosion Properties of Wrought Iron- and Nickel-Based Corrosion Resistant Alloys for the Chemical Process Industry, **03.02**
G 158–98 Guide for Three Methods of Assessing Buried Steel Tanks, **03.02**
G 159–98 Tables for Reference Solar Spectral Irradiance at Air Mass 1.5 Direct Normal and Hemispherical for a 37° Tilted Surface, **14.04**
G 160–98 Practice for Evaluating Microbial Susceptibility of Non-Metallic Materials By Laboratory Soil Burial, **14.04**
G 161–00 Guide for Corrosion-Related Failure Analysis, **03.02**
G 162–99 Practice for Conducting and Evaluating Laboratory Corrosion Tests in Soils, **03.02**
G 163–99 Guide for Digital Data Acquisition in Wear and Friction Measurements, **03.02**
G 164–99ε[1] Test Method for Determination of Surface Lubrication on Flexible Webs, **03.02**
G 165–99 Practice for Determining Rail-to-Earth Resistanc, **03.02**
G 166–00 Guide for Statistical Analysis of Service Life Data, **14.04**
G 167–00 Test Method for Calibration of a Pyranometer Using a Pyrheliometer, **14.04**
G 168–00 Practice for Making and Using Precracked Double Beam Stress Corrosion Specimens, **03.02**
G 169–01 Guide for Application of Basic Statistical Methods to Weathering Tests, **14.04**