TimeBase Pty Ltd. v. Thomson Corporation, The et al Doc. 41 Att. 16

Exhibit 5
Part 12
To Third Declaration of
Joseph N. Hosteny

Dockets.Justia.com

It is agreed that the consideration of the combination of Campbell, Owens and Minoli raises an SNQP as to Claims 9, 11-15, 19 and 30-32 of the Ballard patent. As pointed out in the request on pages 18-20, Minoli teaches a "polling server". This teaching causes the teachings of Owens with respect to its "polling server" (col. 12:12-16); the database (col. 12: 18-27; the report generator (col. 14:12-18); the CPU (col. 12:27-36); the domain name services program (col. 21:23-27) and the memory hierarchy (col. 12:23-27) to be viewed in a new light with the teachings of Minoli as to its teachings of a domain name services program, see pages 248-249, along with the "polling server" teaching found on pages 33 and 350 in Minoli. Minoli teaches using WORM jukebox and optical storage jukebox to store check images, see pages 30-31 of Chapter 7. On page 33, Minoli teaches CD-ROM optical storage being faster than video servers. Thus, there is a substantial likelihood that a reasonable examiner would consider these teachings important in deciding whether or not these claims are patentable. Accordingly, the Campbell, Owens and Minoli combination raise an SNQP as to Claims 9, 11-15, 19 and 30-32, which has not been decided in a previous examination of the Ballard patent.

It is agreed that the consideration of the combination of Campbell and Minoli raise an SNQP as to Claims 17, 22-25 and 37 of the Ballard patent. As pointed out in the request on page 20, Minoli teaches that it was well known to use modem connections to connect LANs to LANs and WANs, see Minoli page 263. Minoli also teaches that several LANs may be interconnected through a WAN, such as in a banking or check processing environment, see Minoli pages 31; 269-271. Minoli also teaches hardware that is typical of a communication network: a modem, page 263; banks of modems, page 263; routers, page 269; a carrier cloud using a frame relay, page 268; and a network switch, page 268. Campbell teaches polling on col. 30:30-39; storing

on col. 3:43-58; and both Campbell on col. 4:30-39 and Minoli on pages 248-249 teach dynamically assigning. Thus, there is a substantial likelihood that a reasonable examiner would consider these teachings important in deciding whether or not these claims are patentable. Accordingly, the Campbell and Minoli combination raise an SNQP as to Claims 17, 22-25 and 37 which has not been decided in a previous examination of the Ballard patent.

It is agreed that the consideration of the combination of Campbell and APA raise an SNQP as to Claims 10 and 33 of the Ballard patent. As pointed out in the request on page 21, it is taught in the Ballard patent that biometric and signature data are well know additions to a remote capture system, see col. 6:46-60. Thus, there is a substantial likelihood that a reasonable examiner would consider these teachings important in deciding whether or not these claims are patentable. Accordingly, the Campbell and APA combination raise an SNQP as to Claims 10 and 33 which has not been decided in a previous examination of the Ballard patent.

It is agreed that the consideration of the combination of Campbell, Owens and Minoli raise an SNQP as to Claims 34 and 35 of the Ballard patent. As pointed out in the request on page 21, in Figure 1 Campbell teaches transmitting within a remote subsystem. In col. 2:26-32 Campbell teaches transmitting between the remote and central subsystems. In col. 3:41-52 Campbell teaches transmitting within the central subsystem. In col. 3:20-43 Campbell teaches connecting the remote to the central subsystem. In col. 3:32-52 Campbell teaches connecting the central subsystem to the remote subsystem. Thus, there is a substantial likelihood that a reasonable examiner would consider these teaching important in deciding whether or not these claims are patentable. Accordingly, the Campbell, Owens and Minoli combination raise an

SNQP as to Claims 34 and 35 which has not been decided in a previous examination of the Ballard patent.

It is agreed that the consideration of the combination of Campbell and Minoli raise an SNQP as to Claims 20 and 21 of the Ballard patent. As pointed out in the request on page 21, in col. 7:6-8 Campbell teaches temporary and long-term archiving of the images at the check process node (12). Minoli on page 219 teaches several image storage systems including: CD-ROMs, WORMs, recordable CD, and magnetooptic (Mo) storage. Thus, there is a substantial likelihood that a reasonable examiner would consider these teaching important in deciding whether or not these claims are patentable. Accordingly, the Campbell and Minoli combination raise an SNQP as to Claims 20 and 21 which has not been decided in a previous examination of the Ballard patent.

It is agreed that the consideration of Campbell raises an SNQP as to Claims 36 and 38-41 of the Ballard patent. As pointed out in the request on page 21-22, Campbell teaches a collecting step at an intermediary bank (14), see col. 2:46-49. Campbell teaches the connection and transmission among three tiers, specifically a bank (14), a node (12) and a bank (16), see Campbell, col. 2:25-33 and 50-63 and col. 3:30-39. Thus, there is a substantial likelihood that a reasonable examiner would consider these teaching important in deciding whether or not these claims are patentable. Accordingly, Campbell raises an SNQP as to Claims 36 and 38-41 which has not been decided in a previous examination of the Ballard patent.

It is agreed that the consideration of ANSI/ABA X9.46-1995, Draft version 0.13 (ANSI-1995) and ANSI X9.46-1997 (ANSI-1997) raise an SNQP as to Claims 1 and 26 of the Ballard patent. As pointed out in the request on pages 26-28, the ANSI/ABA X9.46 standard describes

an electronic data interchange protocol for the exchange of electronic digitized images of financial documents among different financial institutions involved in a payment transaction. As taught in ANSI-1995, pages 15-16 and ANSI-1997, page 16 "[p]ackaged interchange content is delivered from the originating imaging application's financial image interchange translator to the receiving imaging application's financial image interchange translator ... through a computer network by transmitting the ... data electronically." As taught in ANSI-1995, page 14 and ANSI-1997, pages 14-15, functional groups are packaged and interchanged between financial institutions. One type of functional group is "item views", see ANSI-1995, page 14 and ANSI-1997, page 14. "Items views" include imaged items, such as checks or other financial documents. *Id.* As taught in ANSI-1995, page 105 and ANSI-1997, page 105 a data element known as "creation computer" which "conveys the system name of the originator's host computer that was used to created and digitize the imaging data" may be transmitted. As taught in ANSI-1995, page 57 and ANSI-1997, page 57 "[e]ncryption key name ... conveys the name of the key used to encipher the contents of this functional group. The name is mutually known to the security originator and the security recipient, is unique for this relationship, and allows a particular key to be specified." As taught in ANSI-1995, page 14 and ANSI-1997, page 14, as to figure 3 which shows the relationship between a functional group and its components and a transaction set and its components and as taught in ANSI-1995, page 33 and ANSI-1997, page 33, as to figure 9 which shows the contents of the item views functional group (captured image and creation computer) whereby the combination of the two figures teach an encryption of both image and subsystem identification information. Thus, there is a substantial likelihood that a reasonable examiner would consider these teaching important in deciding whether or not these

claims are patentable. Accordingly, ANSI-1995 and ANSI-1997 raise an SNQP as to Claims 1 and 26 which has not been decided in a previous examination of the Ballard patent.

Issues not within Scope of Reexamination

It is noted that an issue not within the scope of reexamination proceedings has been raised: how the Patent Owner is representing the breadth of the claims. The issue will not be considered in a reexamination proceeding. 37 CFR 1.552(c). While this issue is not within the scope of reexamination, the patentee is advised that it may be desirable to consider filing a reissue application provided that the patentee believes one or more claims to be partially or wholly inoperative or invalid based upon the issue.

Conclusion

Per MPEP § 2258 all "live" claims are reexamined during reexamination.

Communications

Please mail any communications to:

Attn: Mail Stop "Ex Parte Reexam"
Central Reexamination Unit
Commissioner for Patents
P. O. Box 1450
Alexandria, VA 22313-1450

Please FAX any communications to:

(571) 273-9900
Central Reexamination Unit

Please hand-deliver any communications to:

Customer Service Window
Attn: Central Reexamination Unit
Randolph Building, Lobby Level
401 Dulany Street
Alexandria, VA 22314

Any inquiry concerning this communication or earlier communications from the Examiner, or as to the status of this proceeding, should be directed to the Central Reexamination Unit at telephone number (571) 272-7705.

Signed:

Michael O'Neill
CRU Examiner
GAU 3993
(571) 272-4442

CONFS;

OIPE IAP68 NOV 25 2005 PATENT & TRADEMARK OFFICE

PTO/SB/57 (04-05)
Approved for use through 04/30/2007. OMB 0651-0033
U.S. Patent and Trademark Office; U.S. DEPARTMENT OF COMMERCE
Under the Paperwork Reduction Act of 1995, no persons are required to respond to a collection of information unless it displays a valid OMB control number.
(Also referred to as FORM PTO-1465)

REQUEST FOR *EX PARTE* REEXAMINATION TRANSMITTAL FORM

64660 U.S. PTO 11/25/05

Address to:
Mail Stop *Ex Parte* Reexam
Commissioner for Patents
P.O. Box 1450
Alexandria, VA 22313-1450

Attorney Docket No.:

Date: 23 November 2005

1. [X] This is a request for *ex parte* reexamination pursuant to 37 CFR 1.510 of patent number 5,910,988 issued June 8, 1999. The request is made by:

   [ ] patent owner. [X] third party requester.

64660 U.S. PTO
90007829

2. [X] The name and address of the person requesting reexamination is:

11/25/05

First Data Corporation
6200 S. Quebec Street
Greenwood Village, CO 80111

3. [ ] a. A check in the amount of $_____ is enclosed to cover the reexamination fee, 37 CFR 1.20(c)(1);

   [X] b. The Director is hereby authorized to charge the fee as set forth in 37 CFR 1.20(c)(1) to Deposit Account No. 18-1260 (submit duplicative copy for fee processing); or

   [ ] c. Payment by credit card. Form PTO-2038 is attached.

4. [X] Any refund should be made by [ ] check or [X] credit to Deposit Account No. 18-1260. 37 CFR 1.26(c). If payment is made by credit card, refund must be to credit card account.

5. [X] A copy of the patent to be reexamined having a double column format on one side of a separate paper is enclosed. 37 CFR 1.510(b)(4)

6. [ ] CD-ROM or CD-R in duplicate, Computer Program (Appendix) or large table
   [ ] Landscape Table on CD

7. [ ] Nucleotide and/or Amino Acid Sequence Submission
   If applicable, items a. – c. are required.
   a. [ ] Computer Readable Form (CRF)
   b. Specification Sequence Listing on:
      i. [ ] CD-ROM (2 copies) or CD-R (2 copies); **or**
      ii. [ ] paper
   c. [ ] Statements verifying identity of above copies

8. [ ] A copy of any disclaimer, certificate of correction or reexamination certificate issued in the patent is included.

9. [X] Reexamination of claim(s) 1-50 is requested.

10. [X] A copy of every patent or printed publication relied upon is submitted herewith including a listing thereof on Form PTO/SB/08, PTO-1449, or equivalent.

12/02/2005 HSALDANA 00000001 181260 90007829
01 FC:1812 250.00 OP

11. [ ] An English language translation of all necessary and pertinent non-English language patents and/or printed publications is included.

This collection of information is required by 37 CFR 1.510. The information is required to obtain or retain a benefit by the public which is to file (and by the USPTO to process) an application. Confidentiality is governed by 35 U.S.C. 122 and 37 CFR 1.11 and 1.14. This collection is estimated to take 2 hours to complete, including gathering, preparing, and submitting the completed application form to the USPTO. Time will vary depending upon the individual case. Any comments on the amount of time you require to complete this form and/or suggestions for reducing this burden, should be sent to the Chief Information Officer, U.S. Patent and Trademark Office, U.S. Department of Commerce, P.O. Box 1450, Alexandria, VA 22313-1450. DO NOT SEND FEES OR COMPLETED FORMS TO THIS ADDRESS. **SEND TO: Mail Stop *Ex Parte* Reexam, Commissioner for Patents, P.O. Box 1450, Alexandria, VA 22313-1450.**
If you need assistance in completing the form, call 1-800-PTO-9199 and select option 2.

12. ☐ The attached detailed request includes at least the following items:

a. A statement identifying each substantial new question of patentability based on prior patents and printed publications. 37 CFR 1.510(b)(1)
b. An identification of every claim for which reexamination is requested, and a detailed explanation of the pertinency and manner of applying the cited art to every claim for which reexamination is requested. 37 CFR 1.510(b)(2)

13. ☐ A proposed amendment is included (only where the patent owner is the requester). 37 CFR 1.510(e)

14. ☒ a. It is certified that a copy of this request (if filed by other than the patent owner) has been served in its entirety on the patent owner as provided in 37 CFR 1.33(c).
The name and address of the party served and the date of service are:

DataTreasury Corporation
175 Pinelawn Road, Suite 200
Melville, NY 11747

Date of Service: 23 November 2005 ; or

☐ b. A duplicate copy is enclosed since service on patent owner was not possible.

15. Correspondence Address: Direct all communication about the reexamination to:

☒ The address associated with Customer Number: 33694

OR

☐ Firm or Individual Name

Address

City	State	Zip
Country		
Telephone	Email	

16. ☐ The patent is currently the subject of the following concurrent proceeding(s):
☐ a. Copending reissue Application No. _____.
☐ b. Copending reexamination Control No. _____.
☐ c. Copending Interference No. _____.
☐ d. Copending litigation styled:

_____

_____

WARNING: Information on this form may become public. Credit card information should not be included on this form. Provide credit card information and authorization on PTO-2038.

_____ _____
Authorized Signature Date

Jeffrey P. Kushan 43,401 ☐ For Patent Owner Requester
Typed/Printed Name Registration No. ☐ For Third Party Requester

OIPE IAP68 NOV 25 2005 PATENT & TRADEMARK OFFICE

IN THE UNITED STATES PATENT AND TRADEMARK OFFICE

Patent No.:	**5,910,988**
Filed:	August 27, 1997
Patent Owner:	DataTreasury Corporation
Applicant:	Claudio R. BALLARD
For:	Remote Image Capture with Centralized Processing and Storage

Mail Stop **Ex Parte Reexam**
Commissioner for Patents
P.O. Box 1450
Alexandria, VA 22313-1450

REQUEST FOR REEXAMINATION UNDER 35 U.S.C. § 302

Sir:

Reexamination of claims 1-50 of United States Patent Nos. 5,910,988 ("the '988 patent") under 35 U.S.C. §§ 302-307 and 37 C.F.R. § 1.510 is requested. A copy of the '988 patent, issued on June 9, 1999, is attached as Appendix A.

The request for reexamination is which based on substantial new questions of patentability raised by prior art patents and printed publications cited in the accompanying Citation of Prior Art.[1] Copies of the references identified in the Citation are attached as exhibits to this request. None of the primary references serving as anticipatory references or ones which render the claims obvious was cited, made of record or considered during the prosecution of the '988 patent. Moreover, none of those references is cumulative to prior art that was considered by the examiner during prosecution of the '988 patent.

---

[1] U.S. Patent No. 6,032,137 (the '137 patent), filed on February 29, 2000, is a continuation-in-part claiming priority to the '988 patent. The undersigned is also submitting concurrently a request for an *ex parte* reexamination of the '137 patent.

This patent has not expired due to non-payment of maintenance fees and is assigned to DataTreasury Corporation ("DataTreasury"). In accordance with 37 C.F.R. §§ 1.33(c) and 1.510(b)(5), this request is being served in its entirety on the assignee DataTreasury.

I. Statement Pointing Out Substantial New Questions Of Patentability

To obtain a patent, an inventor must have a novel and nonobvious invention. *Titanium Metals Corp. v. Banner*, 778 F.2d 775, 780, 227 USPQ 773, 777 (Fed. Cir. 1985) That is, a person shall be entitled to a patent unless –

> "the invention was known or used by others in this country, or patented or described in a printed publication in this or a foreign country, before the invention thereof by the applicant for a patent" 35 U.S.C. § 102(a);
>
> "the invention was patented or described in a printed publication in this or a foreign country or in public use or on sale in this country, more than one year prior to the date of the application for a patent in the United States" 35 U.S.C. §102(b); or
>
> "the invention was described in a patent granted on an application for patent by another filed in the United States before the invention by the applicant for patent" 35 U.S.C. § 102(e). Moreover, one may not obtain a patent on an invention if the differences between the invention and the prior art are such that the invention as a whole would have been obvious to the person of ordinary skill in the pertinent art. 35 U.S.C. § 103(a).

The '988 patent to Claudio R. Ballard was filed on August 27, 1997. The patent claims systems, methods, and networks for capturing and transmitting images of documents and receipts from a remote location to a central processing location.

U.S. Patent No. 5,373,550 to Campbell, *et al.* ("Campbell," ***Exhibit A***) was issued on December 13, 1994. Campbell describes a method and a system for check image processing such as that claimed in the '998 patent. Campbell teaches the transmission of images: (1) within a remote location; (2) from a remote location to an intermediate location; (3) within the intermediate location; (4) from the intermediate location to a central location; and (5) within the central location, in a tiered or layered configuration, as contemplated by claims 46-50 of the '988 patent.

Many prior art references not considered during the prosecution of the '988 patent disclose imaging other types of financial documents that are "receipts" or their equivalents, such

as U.S. Patent No. 5,930,778 to Geer (***Exhibit H***), ANSI X9.46 -1997 and ANSI X9.46-1995 (***Exhibits J*** and ***I***, respectively), and Minoli (***Exhibit N***). Although Campbell does not require that an image of receipts be captured in addition to the checks, it would have been obvious to one skilled in the art at the time the application was filed to apply the same system of Campbell to remotely capture and transmit within a tiered architecture any financial (or other paper) document, including receipts as disclosed by Geer, ANSI or Minoli, because, as with checks, this would reduce or eliminate the need to physically transfer and store those documents. Thus, the foregoing prior art, which were not considered during prosecution of the '988 patent raise a substantial new question of patentability of claims 46-50 of the '988 patent under 35 U.S.C. § 103.

Moreover, Campbell describes a communication network as set forth in claims 42-45 of the '988 patent. That is, Campbell teaches the existence of three subsystems that each expressly or inherently have a local area network, and a wide area network for transmitting images between the three subsystems in a tiered architecture. To the extent Campbell does not expressly describe specific components of the system, those components are nevertheless inherent in the description of the system and its use set forth in Campbell. Again, although Campbell does not expressly teach that an image of receipts be captured in addition to the checks, it would have been obvious to one skilled in the art at the time of the invention to apply the same system of Campbell to remotely capture images of both documents and receipts. Thus, Campbell raises a substantial new question of patentability of claims 42-45 of the '988 patent under 35 U.S.C. § 103.

Campbell also describes the system and method set forth in claims 1, 2, 16, 18, 26, 27, and 29 of the '988 patent. In particular, Campbell describes a method of (1) capturing images of paper documents at one or more banks; (2) managing the capturing and sending of the images with the multiworkstation equipment; (3) collecting, processing, sending and storing the transaction data at a central location; (4) managing the collecting, processing, sending and storing of the transaction data; (5) encrypting the information transmitted, which includes both the images and information about the identity of the sending institution; and (6) transmitting the images and accompanying information within and between the remote location and the central location by virtue of a communication network. That method uses the system claimed in claim 1. To the extent Campbell does not expressly describe specific components of the system or

method, those components are nevertheless inherent in the description of the system and its use set forth in Campbell Once again, although Campbell does not expressly teach that an image of receipts be captured in addition to the checks, it would have been obvious to one skilled in the art at the time of the invention to apply the same system of Campbell to remotely capture images of both documents and receipts. Thus, Campbell raises a substantial new question of patentability of claims 1, 2, 16, 18, 26 , 27, and 29 of the '988 patent under 35 U.S.C. § 103.

Moreover, Campbell, taken in view of Minoli, "Imaging in Corporate Environments: Technology and Communication" ("Minoli"), U.S. Patent 4,264,808 to Owens et al.[2] ("Owens," ***Exhibit P***), and prior art admitted by the applicant, raises a substantial new question of patentability of claims 3-15, 17, 19-25, 28, 30-41 under 35 U.S.C. §103. These additional references and admissions describe additional claim elements which, for the reasons explained in detail below, it would have been obvious to employ in combination with the systems and methods described by Campbell.

The Geer patent ("Geer"), which was filed prior to the '988 patent, describes a system and method exactly as set forth in claims 46-50. Thus, Geer raises a substantial new question of patentability of claims 46-50 of the '988 patent under 35 U.S.C. § 102(e).

Minoli, which is a textbook that was published more than one year before the '988 patent was filed, describes a system exactly as set forth in claims 42-45. Thus, Minoli raises a substantial new question of patentability of claims 42-45 of the '988 patent under 35 U.S.C. § 102(b).

ANSI X9.46-1995 ("ANSI-1995"), which was a document accessible and distributed to a working group of financial institutions dedicated to developing an electronic data interchange standard for the exchange of check images and financial data across a computing network more than one year before the '988 patent was filed[3], describes the systems, methods and networks exactly as set forth in claims 1-41. Thus, ANSI X9.46-1995 raises a substantial new question of patentability of claims 1-41 of the '988 patent under 35 U.S.C. § 102(b).

---

[2] Owens was cited and considered by the Examiner during prosecution of the '988 patent.

[3] This document was also available to members of the financial industry upon request or reasonable diligence.

ANSI X9.46-1997 ("ANSI-1997") was the standard that resulted from the working groups efforts on ANSI X9.46-1995, and was published in 1996 by the American Bankers Association and was approved by the American National Standards Institute, Inc. on January 21, 1997. Like ANSI X9.46-1995, ANSI X9.46-1997 describes the systems, methods and networks exactly as set forth in claims 1-41. Thus, ANSI X9.46-1997 raises a substantial new question of patentability of claims 1-41 of the '988 patent under 35 U.S.C. § 102(a).

II. Overview of the Claimed Subject Matter of the '988 Patent

The '988 patent describes a system for scanning documents and receipts to create images, and for transmitting, storing and processing the images. Independent claims 1 and 26 are directed to remote capture and transmission of encrypted images, while independent claims 42 and 46 are directed to transmission of transaction data between and within three (3) subsystems [or locations]. But as will be made clear from the analyses of the newly cited art, remote capture and transmission of encrypted images and the transmission of data within a tiered architecture were well-known concepts at least within the banking industry and at least since the early 1990s.

Claims 1-41 of the '988 patent are drawn to a system (claim 1) or method (claim 26) wherein images are captured remotely and transmitted to a central subsystem (claim 1) or central location (claim 26) over a communication network. Also transmitted from the remote system/location to the central system/location is "subsystem identification information." This term is not defined by the specification of the '988 patent ("the Specification").[4] According to claim 1, the remote data access subsystem "provide[s] encrypted subsystem identification information and encrypted paper transaction data to the data processing subsystem."[5] Analogously, the method of claim 26 includes a step of "encrypting subsystem identification information and transaction data."

---

[4] The Specification does disclose that a controller may tag the image with "an identification number to identify the merchant originating the scan." '988 patent, col. 8, lns 14-23.

[5] The Specification discloses that a controller may execute "an encryption algorithm which is well known to an artisan of ordinary skill in the field to encrypt the CBI [compressed bitmap image] in step 318 [of Fig. 3A]. Encryption protects against unauthorized access during the subsequent transmission of the data." Col. 8, lns 3-5. Further disclosure of methods of encryption, algorithms, and the exact data that is encrypted is lacking in the Specification.

Claims 42-50 of the '988 patent are drawn to a communication network forming a tiered architecture (independent claim 42) and a method for transmitting data[6] in a tiered manner (independent claim 46) among three (3) subsystems (claim 42) or three (3) locations (claim 46): remote, intermediate, and central.

The dependent claims of the '988 patent, claims 2-25 and 27-41 and 43-45 and 47-50, do not contain any additional features which would impart patentable subject matter to the independent claims. The European Patent Office ("EPO") has recently examined and rejected analogous claims in a counterpart application. The EPO examiner characterized the limitations of the dependent claims as "refer[ring] to minor implementation details or other generally known features which would be used by the skilled person as a matter of normal design procedure."[7]

III. Explanation of Pertinency and Manner of Applying Cited Prior Art to Every Claim for which Reexamination Is Requested

The prior art relied upon in this request renders the claims of the '988 patent unpatentable.

In the discussion below, the prior art will be applied to the '988 patent claims in the order of increasing breadth of the four independent claims, namely, claims 46, 42, 1, and 26. Thus, claims 46-50 will be analyzed first, including a discussion of Campbell and Geer. Next, claims 42-45 will be analyzed versus each of Campbell and Minoli. Independent claims 1 and 26 and their dependent claims will then be analyzed versus each of Campbell and the ANSI/ABA-X9.46 documents. Finally, the additional cited art will be briefly discussed.

---

[6] While claims 42-50 do not expressly recite that the data is encrypted during transmission, the patentee made clear statements of disavowal of claim scope during the prosecution of the '988 patent claims in response to a rejection of claims 42-50 (among others) as filed, thereby requiring the reading of encryption into these claims. Thus, the following analyses of claims 42-50, following the plain language of the claims, should not be read as assuming that encryption is not required. In any event, the references applied to these claims in fact teach the encryption of data limitation. Specifically, Campbell teaches encryption of the data at col. 5, lns 55-60; and Geer teaches encryption at col. 14, lns 32-39.

[7] Page 3 of the October 24, 2005 EPO Office Action rejecting all claims to European Application 98/942251.4-1238, under Campbell, et al. In Ballard's corresponding International Application, PCT/US/98/17662, the European Searching Authority cited Campbell, et al. as an "X reference" (particularly relevant if taken alone). The EPO Office Action and Search Report are attached as Exhibit B.

A. Claims 46-50 Are Obvious or Anticipated in View of the Prior Art

1. Campbell Renders Claims 46-50 Obvious under 35 U.S.C. § 103(a)

Campbell describes a public switched telephone network including a check clearing services node 12, which receives check images from a sending institution 14, processes the image data, and transmits the check images to a receiving institution 16. Campbell, col. 2, lns 25-33. Campbell was not cited in the original prosecution of the '988 patent.

As illustrated in FIG. 1 of the Campbell patent, reproduced below, checks are scanned at a first bank, the check images are transmitted from the first bank to a check processing node 12, such as a clearinghouse, and images are further transmitted to a second bank.

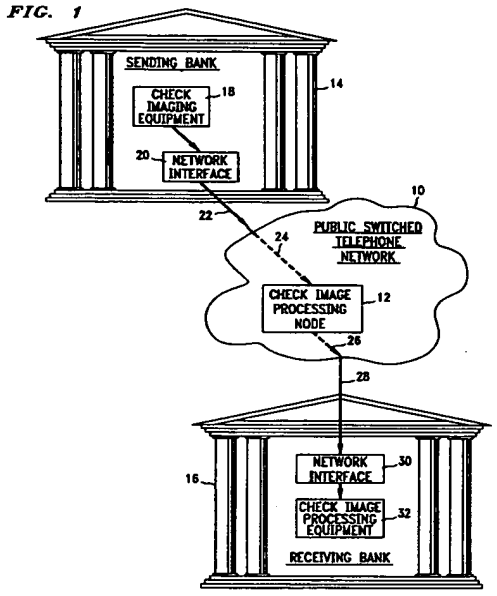

Campbell expressly teaches every element of claims 46-50, except for the requirement that an image of receipts be captured in addition to documents (i.e. "capturing an image of documents and receipts . . . "). However, these claims are rendered obvious under Campbell in view of Geer, and/or ANSI/ABA X9.46-1995, or any number of other document/receipt imaging disclosures. An element by element comparison of claims 46-50 of the '988 patent to Campbell is provided in Exhibit C.

Claim 46

Claim 46 requires that data is transmitted between and among three locations: remote, intermediate and central. Although the preamble of claim 46 broadly contemplates the use of more than one of each subsystem/location (i.e., the phrase "at least one" is used to introduce each of the three subsystem/locations), the claim clearly covers a configuration where there is only one of each location. That is, "at least one" meets the limitations of the claims. Accordingly, claim 46 covers any architecture in which ***a*** remote location (bank 14) communicates with ***an*** intermediate location (processing node 12), which communicates with ***a*** central location (bank 16), as is described in Campbell.

Campbell teaches that image data may be transmitted between and among a remote, intermediate and central location. Each of the sending bank 14 (remote location) and receiving bank 16 (central location) has imaging equipment such as large multiworkstation systems available from companies such as IBM, UNISYS, or NCR. Campbell, col. 3, ln. 10-12; 46-48. "The images produced by the equipment 18 [at the sending bank 14] are directed to a network interface 20 which converts the signals from the equipment 18 into signals suitable for transmission on the telephone network 10." Campbell, col. 3, ln 17-20.

Furthermore, Campbell, teaches "extracting data" from the captured check images through character recognition capability at the sending institution 14. Campbell, col. 3, ln 61 - col. 4, ln 5. Specifically, data such as a desired destination for routing the check image is extracted from the check image at the sending bank 14: "[t]he destination identifying data ... may also be entered by character recognition equipment or the like in response to the image produced by equipment 18." col. 3, ln. 66 - col. 4, ln. 2. Thus, Campbell teaches the claimed elements of capturing an image of a check, extracting data (e.g., destination identifying data) from the image at a sending bank 14, and "transmitting data within the remote location" (sending bank 14).

Campbell teaches the transmission of images: (1) within a remote location; (2) from a remote location to an intermediate location; (3) within the intermediate location; (4) from the intermediate location to a central location; and (5) within the central location, in a tiered or layered configuration, as contemplated by claim 46.

Campbell does not specifically disclose the capturing of other documents and receipts. However, many prior art references, including references cited herein, disclose imaging other types of financial documents that are receipts or equivalent, such as Geer (payment stubs, FIG. 1, reference numeral 2); and ANSI X9.46 (other financial documents) and Minoli (documents in general). It would have been obvious to one skilled in the art at the time of the invention to apply the same system of Campbell to remotely capture and transmit within a tiered architecture any financial (or other paper) document, including receipts, as broadly disclosed by Geer, ANSI or Minoli, because, as with checks, this would desirably reduce or eliminate the need to physically transfer and store those documents.

Claims 47-50

Claims 47-50, dependent on independent claim 46, are also rendered obvious in view of Campbell. An element by element comparison of claims 47-50 of the '988 patent to Campbell is provided in Exhibit C. Claims 47-50 describe transmitting steps that are typically part of a communication among a three (3) tiered network. These claims add limitations, which are expressly taught by Campbell and include: Claim 47: connecting the remote to the intermediate location (Campbell, col. 3, lns 17- 31); Claim 48: connecting the intermediate to an external communication network (Campbell, col. 3, lns 17- 31) and connecting the central location to the communication network (Campbell, col. 4, ln 30-34); Claim 49: packaging the transaction data into frames (Campbell, col. 4, lns 18-23) and transmitting the frames through the external communication network (Campbell, col. 4, lns 18-23); and Claim 50: the data transmitted is paper transactions from documents (Campbell, col. 2, lns. 26-32).

2. Geer Anticipates Claims 46-50 Under §102(e)

Geer describes a system and method wherein item capture may occur at a payee's facility "for effecting the efficient submission of check and other financial instruments into the payment system for collection of funds." Col. 4, lns 47-49. Geer was not cited during the prosecution of the '988 patent. "The financial instruments are received by a payee at a capture location remote from the payee's collecting and clearing depository bank... ." Col. 4, lns 49-51. Geer further describes that "electronic scanning means at a first location established by the payee receives the financial instruments, scans and extracts necessary data therefrom including the data of the magnetic ink character recognition (MICR) line of the instrument, adds necessary data such as

the amount and a document identification number to the electronic information associated with each check, and sends this electronic information to the payee's depository bank for further electronic sorting and processing both with regard to the introduction of the checks into the payment system and the crediting of funds represented by the checks to the payee's account at the bank." Geer, col. 4, lns 54-65.

As seen in FIG. 1 of the reference, the 3 tiers of Geer corresponding to the 3 claimed tiers are: (1) a first location 2 with electronic scanning means ("remote location at which the step of "capturing an image of documents and receipts and extracting data therefrom" occurs); (2) the payee's depository bank 10 ("intermediate location"); and (3) the payment system 12 ("central location"). As shown in the element by element analysis of claims 46-50 attached hereto as Exhibit D, Geer discloses data being transmitted between and within all of these tiers. Specifically, the following passages teach the data transmitted from the remote to intermediate locations: "Information pertaining to the checks and/or the cash letters in anticipation of a deposit in the payee's account corresponding to a cash letter (or cash letters) is transmitted from the payee to the collecting and clearing depository bank." Col 5, lns 25-31. "[T]his image of the check may also be transmitted electronically to the bank along with the other information extracted from the check." [Col 9, lns 1-10.] Geer also discloses that the data is transmitted from the intermediate to central locations: "The electronic check information ... is sent via an appropriate communication link 15 into the payment system 12." Col 9, lns 27-30. Finally, given the numerous components disclosed at each location that deal with data, data transmission within each location it is inherently disclosed.

B. Claims 42-45 are Obvious or Anticipated in View of the Prior Art

1. Campbell Renders Claims 42-45 Obvious under 35 U.S.C. § 103(a)

Claims 42-45 of the '988 patent describe a communication network forming a tiered architecture among three subsystems: remote, intermediate, and central. Claim 42 literally requires nothing more than three LANs (one which includes an imaging subsystem) interconnected by a WAN in a tiered architecture, an architecture that has existed since the early 1990s.

An element-by-element comparison of claims 42-45 of the '988 patent to the disclosure of Campbell is provided in Exhibit E. Campbell teaches the existence of three subsystems, one at each of the sending bank 14, the node 12, and the receiving bank 16, each expressly or inherently having local area network, and a wide area network (telephone network 10) for transmitting images between the 3 subsystems in a tiered architecture (See, Fig. 1 directional arrows of the communications lines 22, 24, 26, and 28, as well as Fig. 2 directional arrows). The local area network ("LAN") connecting the subsystems of the node 12 is expressly taught. Campbell col. 4, lns 56-58. The LANs at each of the sending and receiving banks are inherent to the nature of the equipment at each bank.

Campbell further teaches that the check imaging equipment 18 ("an imaging subsystem for capturing images of documents and receipts") and/or 32 may be "large multiworkstation systems available from companies such as IBM, UNISYS, or NCR." Campbell, col. 3, ln. 10-12; 46-48. One skilled in the art would understand that the term "large multiworkstation systems" means that the equipment 18 includes multiple components interconnected by a local area network.[8] LANs were commonplace at banking institutions by the early 1990's, as is evidenced by the express teaching of the LAN at the check processing node 12. Thus, Campbell alone teaches all of the hardware components of claims 42-45.

As noted above, Campbell does not expressly teach capturing images of "receipts." As discussed above with respect to claims 46-50, it would have been obvious to apply the teaching of Campbell to process any financial (or other paper) document, including receipts, as broadly disclosed by Geer, ANSI or Minoli, because doing so would desirably eliminate the need to handle such documents in paper form. Accordingly, claims 42-45 are unpatentable under 35 U.S.C. § 103(a).

2. Minoli Anticipates Claims 42-45 under 35 U.S.C. § 102(b)

Minoli, as its title ("Imaging in Corporate Environments: Technology and Communication") indicates, provides an overview of the state of imaging communication

---

[8] See the attached definition of "workstation" which states that the term "workstation" "refers to any computer connected to a local-area-network," at Exhibit F. The concept of networked workstations is further supported by Campbell, et al.'s use of the term "large multiworkstation systems".

technologies as of 1994. As stated in the preface, "[t]he word Communication in the subtitle emphasizes aspects of remote delivery of stored image information, whether across a local area network (LAN) in a building or campus, or a wide area network (WAN) covering a region, a state, or the nation." Minoli, p. xi. Minoli teaches that a typical remote image capture application in the banking industry "involves (1) scanning of documents at branch offices for transmission to a host computer at the main office of the central site." Minoli, p. 20. Minoli also describes several local area network (LAN) and wide area network (WAN) based architectures for transmission of images between and within three (3) tiers.

The hardware of FIG. 2.6 of Minoli may be used with wide area communication networks. Minoli states that Chapter 2 "provides an initial overview of system configurations that are typical of what corporate managers ...have already put in place as of the early 1900s." Minoli, p. 26. Chapter 2 is used to show "various subcomponents of the imaging system." *Id.* Minoli continues, "Chapters 8 and 9 will focus more specifically on technical aspects of these and communication technologies." *Id.*

At least claims 42-45 of the '988 patent are anticipated by Minoli. A claim-by-claim analysis of claims 42-45 of the '988 patent with respect to the reference is set forth in Exhibit O, which illustrates the three LANs of FIG. 2.6, one corresponding to the Scan segment, the Utilities segment, and the Access segment. Each of the 3 LANs has a LAN wiring hub, which is a common connection point for devices in a network. The LANs are illustrated as connected by a LAN bridge, which is a device that connects two or more LANs. However, Minoli contemplates that these 3 LANs could also be connected by a WAN, "WAN communication services [] can be employed in support of distributed imaging in general and LAN interconnection in particular." Minoli, p. 39.

The 3 LANs of FIG. 2.6 teach a tiered workflow of images. The Scan segment provides an imaging subsystem (scanner) that captures images of documents. These images may be routed in electronic form through the Utilities segment to make use of the fax server or mainframe, to the Access segment for viewing and storage. As is clear from the diagram attached in Exhibit O, in order for images to be transmitted to the Access Segment, they must be routed through the Utilities segment. Thus, as illustrated in FIG. 2.6, Minoli teaches the

transmission of images from a first LAN to a second LAN, and then from that second LAN to the third LAN, in a tiered or layered configuration.

The top-left-hand corner of FIG. 2.6 demonstrates several scanners connected by a LAN as a "scan segment" in a 3-tier architecture. Minoli, p. 31. FIG. 2.6 also shows a "LAN hub" which connects a "capture workstation" having a "scanner" to other components such as a mainframe, a print server, and a display workstation. Minoli, p. 30. These descriptions in Minoli easily meet the first LAN limitation of claim 42, wherein a remote subsystem includes an imaging subsystem for capturing images of documents and receipts.

The bottom-left-hand corner of FIG. 2.6 demonstrates a "fax server" and a mainframe connected via a "LAN wiring hub" in a portion of the 3-tiered-architecture shown as the "Utilities segment." Minoli, p. 31.

FIG. 2.6 shows an "Access segment" in the bottom corner of the 3-tiered architecture including a file server, a printer, and viewing workstations connected through a "LAN wiring hub." This LAN is connected to the Utilities segment LAN via a "LAN bridge." Minoli, p. 31.

Claims 43-45 are also anticipated by or obvious over Minoli. These claims add further structure to the three tiers of transmission described in Claim 42. Claims 43-45 require hardware that is typically part of a communication network and that is explicitly taught by Minoli. These claims add limitations of a modem (Minoli, p. 263); a bank of modems (Minoli, p. 263); routers (Minoli, p. 269); a carrier cloud using frame relay (Minoli, p. 268); a network switch (Minoli, p. 268); and transmission of images from documents (Minoli, p. 20).

C. Claims 1-41 are Anticipated or Obvious in View of the Prior Art

1. Campbell Renders Independent Claims 1 and 26 Obvious under 35 U.S.C. § 103(a)

Claim 1

Campbell teaches the remote data access subsystem of claim 1 as sending bank 14. Campbell, col. 3, ln. 10-12. Campbell describes that both paper transaction data, i.e., images of documents, such as checks, and subsystem identification information, i.e., accompanying identifiers, are transmitted from a remote data access subsystem. "The controller 42 may read some data accompanying check images, for example, it may identify that TCP/IP protocol

information accompanying those images. That information may instruct the node 12 about the identity of the sending institution and the intended receiving institution." Campbell, col. 5, ln 23-28 (emphasis added). Furthermore, the processing node 12 "may read certain overhead information accompanying the images, including frame relay flags, identifiers, address bits, indicators, and other overhead information." Campbell, col. 5, ln 2-5.

Campbell teaches the central data processing subsystem of claim 1. Specifically, "the processing node 12 receives check images and performs certain processing procedures on those images, including at least temporary storage of the received check images." Campbell, col. 3, lns. 43-58. The processing node 12 "transmits frames of digital information representing check images to the network 38 after those images have been processed by the node 12. A node controller and router 42 control the routing of check images to their intended destinations, both in the controller and to their ultimate destinations outside the network 38." Campbell, col. 3, lns. 30 – 39.

Campbell also teaches the communication network of claim 1. Images are exchanged via a public switched telephone network. Campbell, col. 2, lns. 20-22. "The public switched telephone network 10 may be ....electrically or optically based or ... may be digital or analog. Two examples of suitable digital networks are a packet network and a frame relay network, such as the existing packet and frame relay networks now provided by carriers such as AT&T." Campbell, col. 2, lns. 50-63.

Campbell also teaches the encryption limitations of claim 1. "The controller 42 may also be configured to handle information encrypted by sending institutions to provide security for the images transported by the network 38. The controller 42 may have its own encryption and decryption equipment to provide a secure environment in the node 12." Campbell, col. 5, lns. 55-60. Thus, the sending bank 14 is capable of sending encrypted "information." This information includes check images and also information "about the identity of the sending institution." Campbell, col. 5, lns. 26-27. Thus, encrypted information includes encrypted images and encrypted subsystem identification information.

Independent claim 1 recites that the remote data access subsystem comprises "an imaging subsystem for capturing the document and receipts." As noted above, Campbell does not expressly teach the capturing of "receipts." However, as discussed above with respect to claims

46-50, it would have been obvious to apply the teaching of Campbell to process any financial (or other paper) document, including receipts, as broadly disclosed by Geer, ANSI or Minoli, because doing so would desirably eliminate the need to handle such documents in paper form. Accordingly, claim 1 is unpatentable under 35 U.S.C. § 103(a).

Claim 26

Each and every step of claim 26 of the '988 patent is taught by Campbell. As explained, Campbell describes a method of (1) capturing images of paper documents at one or more banks; (2) managing the capturing and sending of the images with the multiworkstation equipment; (3) collecting, processing, sending and storing the transaction data at a central location (check processing node 12); (4) managing the collecting, processing, sending and storing of the transaction data at the check processing node 12; (5) encrypting the information transmitted to the check processing node 12 which includes both the images and information about the identity of the sending institution; and (6) transmitting the images and accompanying information within and between the remote location and the central location by virtue of a communication network. An element by element comparison of claim 26 to Campbell is provided in Exhibit G.

The preamble of claim 26 recites, "A method for [the processing] of remotely captured paper transactions from documents and receipts." Campbell does not expressly teach capturing from "receipts." However, as discussed above with respect to claims 46-50, it would have been obvious to apply the teaching of Campbell to process any financial (or other paper) document, including receipts, as broadly disclosed by Geer, ANSI or Minoli, because doing so would desirably eliminate the need to handle such documents in paper form. Thus, claim 26 is unpatentable under 35 U.S.C. § 103(a).

2. Campbell, Alone or in Combination with Other References, Teaches the Limitations of All of the Claims Dependent upon Claims 1 and 26.

Campbell provides a strong motivation to combine its teachings with other check imaging systems, methods, and networks. First, Campbell teaches that the imaging equipment at any of the banks may be large multiworkstation systems available from companies such as IBM, UNISYS, or NCR. Campbell, col. 3, lns. 10-12. Second, Campbell describes that the network 10 may incorporate any network technology, such as electrical or optical, digital or analog, local or long-distance, and the like. Campbell, col. 2, lns 50-63. The check processing node 12

provides for storage, retrieval, access, receiving, sending, processing, and verifying check images. Campbell, FIG. 2. Finally, Campbell describes the use and transmission of check images in any "network based check clearing service which handles the routing, sorting, delivery, and storage of interbank check images to effectuate a check clearing procedure." Campbell, col. 8, lns 1-4. Thus, Campbell provides the motivation to combine its systems and methods with more detailed teachings of the remote subsystem, the communication network, the central processing subsystem, and any general hardware or transmission mechanisms.

Minoli teaches that a typical remote image capture application in the banking industry "involves (1) scanning of documents at branch offices for transmission to a host computer at the main office of the central site." Minoli, p. 20. Thus, for one looking to add hardware components, such as routers, modems, and storage devices and also networking architectures in a check imaging application, one skilled in the art is highly motivated to refer to the Minoli textbook. There exists a strong motivation to combine the teachings of Minoli with other references that discuss check imaging applications, such as the ANSI standard, Owens, Campbell, etc.

Because of these motivations, it would have been obvious to combine the teachings of Campbell and/or Minoli with the prior art discussed below to arrive at the inventions of the noted dependent claims of the '988 patent.

a. Claims 2, 16, 18, 27, and 29 are anticipated by Campbell

Campbell teaches each and every one of the limitations of the noted dependent claims, including the scanner of claim 2 (Campbell, col. 2, ln. 64 – col. 3, ln 12); the data collecting subsystem of claim 18 (Campbell, FIG. 2; col. 2, lns 46-49); the tagged, encrypted, compressed bitmap image of claim 27 (Campbell, col. 7, lns. 15 – 27); and the plurality of remote and central locations of claim 29 (Campbell, col. 2, lns. 27-49).

Claim 16, dependent on claim 1, adds further architecture to the communication network of claim 1, such as a first and second LANs corresponding to the remote and central subsystems, and a WAN for transmitting data between the remote and the central subsystems. A first LAN inherently connects the components of the sending bank 14 (Campbell, col. 3, ln. 10-31); while a second LAN 56 connects the components at the check processing node (12) (Campbell, col. 4, lns. 56-58), while the network 10 may be a WAN (Campbell, col. 2, ln 61).

The limitations of claim 1 of the '988 patent are also anticipated by FIG. 2 of Campbell, which is a more detailed illustration of the teaching of FIG. 1. A bank of first deposit 36 (type of bank 14) and a payor bank 34 (type of bank 16) interchange images through the check processing node 12. For example, check images may be transmitted in a "forward flow path from a bank of first deposit [through the check processing node 12] to a payor bank." Campbell, col. 7, lns. 65-68. The bank of first deposit may have check processing equipment for generating images of the checks. Campbell, col. 4, lns 18-21; col. 3, lns 46-48. Thus, the bank of first deposit 36 may be considered a remote data access subsystem that transmits images to the check processing node 12 (a central data access subsystem), for the forward presented of check images.

Claim 18 requires an intermediate data collecting subsystem in between the remote and central subsystems. This limitation is taught by the embodiment of Campbell described above, wherein a bank of first deposit 36 may transmit images to the check processing node 12. This transmission may be through an intermediary bank 14, which forwards received images and is located in between the bank of first deposit 36 and the check processing node 12, "[o]ne or both institutions 14 and 16 may also be any intermediary institution in the forward and reverse check clearance flows between a bank of first deposit and a payor bank." Campbell, col. 2, lns 46-49. Thus, the workflow of images is: (1) images are captured at the bank of first deposit 36; (2) the images are transmitted from the bank of first deposit 36 to an intermediate bank 14; the images are transmitted from the intermediate bank 14 to the check processing node 12, thus meeting the limitations of claim 18.

Claim 29 (plurality of remote locations, plurality of central locations), depends on claim 26 (the method embodiment of claim 1). Both claims 26 and 29 are anticipated by Campbell

b. Claims 3-8 and 28 are obvious over Campbell in view of admitted prior art

As acknowledged by the applicant in the '988 patent, "[a]s is known to persons of ordinary skill in the art, the DATs 200 could also include additional devices for capturing other biometric data for additional security. These devices include facial scans, fingerprints, voice