Voip-Pal.com, Inc. v. Apple, Inc.
Doc. 1 Att. 4

# Exhibit C

Dockets.Justia.com

## 1. Apple Inc. / Denise Kerstein Phone & E-mail Correspondence May-July 2014

- Early May 2014: Voip-Pal's Tom Sawyer contacts Denise Kerstein, Head of Patent Acquisitions for Apple via telephone and introduces Voip-Pal to Apple

- May 27, 2014: Apple's Denise Kerstein email to Tom Sawyer

Subject: Voip-Pal/Digifonica
From: Denise Kerstein <dkerstein@apple.com>
Date: Tue, 27 May 2014 10:54:46 -0700
Cc: Offerings <offerings@apple.com>
To: "Thomas E. Sawyer" <tesawyer@tesawyer.com>
X-Mailer: Apple Mail (2.1874) X-Brightmail-Tracker:

Hello Tom,

Thank you for all the follow up. We have concluded our review of the portfolio and are passing.

I appreciate your bringing the opportunity to Apple.

Regards
Denise

- June 25, 2014: Tom Sawyer contacts Denise Kerstein regarding Apple's announcement about VoIP/Data Applications

On Jun 25, 2014, at 10:36 AM, Thomas E. Sawyer <tesawyer@tesawyer.com> wrote:

Denise,

Again, thank you and your associates at Apple for the technical evaluation of the Voip-Pal.com patented technology portfolio. Based on recent public announcements, it appears that Apple is developing a VoIP service application to add to its latest I-phone. We are confident that Voip-Pal.com technology would greatly enhance such a launch, and would be most willing to negotiate a licensing agreement with Apple that provides the protection of our patents. Best wishes for Apple's continued success.

Thomas E. Sawyer, Ph.D

- July 2, 2014: Denise Kerstein referred Voip-Pal's portfolio to Apple's Legal Counsel-IP Transactions, Jeffrey Lasker,

At 06:01 PM 7/2/2014, Denise Kerstein wrote:

Hi Tom,

I have asked a colleague to have a look at your portfolio. Jeff Lasker (on cc) will be your point person going forward.

Thank you,
Denise

## 2. Apple Inc. / Jeffrey Lasker Phone Correspondence July 8 & 14 2014

- July 8, 2014: Tom Sawyer confirms having initial contact from Jeffrey Lasker

Thomas E. Sawyer <tesawyer@tesawyer.com> 7/9/14

to colinp.tucker, edwincandy, dtchang101, Emil, me

Gentlemen, I was contacted again today by Jeffrey Lasker, Legal Counsel, for Apple. Ed Candy had revised the Amazon one-page presentation to the attached one-pager for Apple. I anticipate a follow up from him next week. Our six patents are being reviewed by their engineering again.. Thanks.

Thomas E. Sawyer, Ph.D.

- July 14, 2014, Tom Sawyer comments after a positive call with Jeffrey Lasker

Thomas E. Sawyer <tesawyer@tesawyer.com> 7/14/14

to me

I think it was quite positive. They are suggesting licensing the technology, but we still need to have the engineers put together a chart of how they might be infringing our patents. The conference call with RPX went reasonably well also. They also need the same type of chart, but covering all VoIP users, thus it would be generic in nature. Konstantin and Ed are on it already.

Thomas E. Sawyer, Ph.D.

### 3. Apple Inc. / Jeffrey Lasker E-Mail July 17 2014 w Attachment 3A

**From:** "Thomas E. Sawyer" <tesawyer@tesawyer.com>
**Date:** Thu, 17 Jul 2014 12:19:22 -0600
**To:** Emil Malak <Emil_Malak@hotmail.com>, <colinp.tucker@tiscali.co.uk>, Edwin Candy <edwincandy@btinternet.com>, <dtchang101@aol.com>
**Cc:** Ryan Thomas <ryanthomas2@weber.edu>
**Subject:** Voip-Pal

Tom,

Please see the attached correspondence.

Best regards,
Jeff

Jeffrey V. Lasker
Legal Counsel, IP Transactions
ï£¿ Apple Inc.
408-862-1377

**3A. Attachment to E-mail dated July 17 2014**

July 17, 2014 Via Email

Thomas E. Sawyer, Ph.D.
Chairman and CEO
Voip-Pal.com, Inc.
P.O. Box 900788
Sandy, Utah 84090
Email: tesawyer@tesawyer.com

Dear Tom,

Thank you for taking the time to speak with me earlier this week. I am also in receipt of your email to me dated July 14, 2014 in which you attached a business plan and indicated that you are preparing "a chart that depicts the potential of Apple infringing [Voip-Pal's] patents if Apple were to enter into VoIP offerings."

Apple respects the valid intellectual property rights of third parties, and we will investigate detailed allegations of infringement. As I explained during our discussion, we have reviewed the patents and do not believe they cover any products or services offered by Apple. Thus, we do not believe that any current Apple product requires a license. If you disagree, please provide detailed claim charts explaining the basis for your assertion.

If you are asking Apple to consider your company's ideas or to collaborate in some other way, we cannot do so. Apple has a stated policy of not accepting, reviewing, or considering outside submissions of product ideas for any purpose. We have adopted this policy due in part to the large volume of mail received and also to avoid potential misunderstandings or disputes when Apple's products or marketing strategies might seem similar to ideas submitted to Apple. The policy can be viewed at http://www.apple.com/legal/policies/ideas.html.

If we have misconstrued your correspondence, please contact us with greater specificity, including providing claim charts detailing any assertions if any. Please direct all future correspondence to me.

Regards,

Jeffrey V. Lasker
Legal Counsel, IP Transactions

**Apple Inc.**
Jeffrey V. Lasker
1 Infinite Loop, MS 169-3IPL
Cupertino, CA 95014
(408) 862-1377
jlasker @apple.com

**4. E-Mail to Apple dated September 15 2014 w Attachments 4A, 4B & 4C**

Thomas E. Sawyer tesawyer@tesawyer.com 9/15/14

to jlasker

Jeffrey,

Attached are the Apple/Voip-Pal IP Assessment and Prior Art search documents for Apple's information and action. We look forward to Apple's response in the near future. Thanks.

Dr. Thomas E. Sawyer

## 4A. Attachment to E-Mail dated September 15 2014 – Cover Letter

Voip-Pal.com, Inc.
10900 NE 4th Street, Suite 2300
Bellevue, WA, 98004
Corporate Website: http://www.voip-pal.com
Trading Symbol: VPLM

September 15, 2014

Jeffrey V. Lasker
Legal Counsel, IP Transactions
Apple, Inc.
1 Infinite Loop, MS 169-31PL
Cupertino, CA 95014

Dear Jeffrey,

Enclosed are claims that briefly explain the basis of Voip-Pal's belief and assertion that Apple products and services currently are, and potentially will be, utilizing technologies contained in the Voip-Pal patents.

Thank you for your statement that "Apple respects the valid intellectual property rights of third parties," and will investigate detailed allegations of infringement. Should you require further information or wish to discuss the patented technologies with the engineers, please feel free to contact me.

Voip-Pal believes that Apple would greatly benefit from either the purchase of its patented technologies or acquisition of a nonexclusive license.

Regards,

Dr. Thomas E. Sawyer
Chairman and CEO
(801) 944-4090
tesawyer@tesawyer.com

**4B. Attachment to E-Mail dated September 15 2014 – Apple/Voip-Pal IP Assessment**

# APPLE/VOIP-PAL IP ASSESSMENT

# COMPARISON OF APPLE AND VOIP-PAL PATENTED TECHNOLOGIES

## INTRODUCTION

The initial purpose of this document is to provide notice to Apple that its products iMessage and Text Messaging, appear to employ technology that may be covered by patents held by Voip-Pal.com, Inc. Voip-Pal has carefully reviewed and, in this notice, documents this apparent past and present use. In addition, the launch of iPhone 6 (and older versions with the iOS 8 software upgrade[1]), and their use of WiFi calling, as well as the hand-off of WiFi calls to a cellular network,[2] will also likely be utilizing Voip-Pal patented technologies.

Voip-Pal believes that there could be significant benefits and opportunities that Voip-Pal's suite of patents might add to Apple's present portfolio. To that end, this document describes the kind of advantages that a license or purchase of Voip-Pal's patented technologies might provide.

The contents of this paper include **Comparisons** between technology areas, **Benefits to Apple**, **Providers Using Voip-Pal Technologies**, and **Summary**, as well as three Appendices (**Voip-Pal's Six Patents** disclose the technology for voice and video calls, text and multimedia messaging - both for Internet multi-node and Internet-to-Legacy communications; **Deployment Opportunities For Apple;** and **Benefits To Voice Over LTE (VoLTE)**).

## COMPARISON

Here are the main technology areas that seem to be used by both parties:

### iMessage

When a message is sent from iPhone to iPhone, Apple infrastructure sees that both devices have Apple IDs, and routes messages through the Internet. When it sees a message from an iPhone to a phone number without an associated Apple ID, it routes the message through the Public Switched Telephone Network ("PSTN"), rather than the Internet. This decision-making

[1] http://www.cnet.com/news/t-mobile-makes-big-wi-fi-push-on-heels-of-iphone-6s-wi-fi-calling/

[2] "With the iPhone 6, Schiller said Apple will allow customers for the first time to hand-off calls from a WiFi network to a cellular network, when you are walking from inside your house to outdoors, for example." http://www.geekwire.com/2014/apple-partners-t-mobile-u-s-advanced-wifi-calling/

and routing, based on subscribed membership, is exactly the type of routing that is described in the RBR patent.[3]

**Text Messaging**

The iPhone handles text (Short Message Service or SMS) messages with the same user interface, using a color code to distinguish the two. Text and iMessage are highly integrated with each other and use processes similar to RBR to decide how to route the message.

**WiFi Calling on iPhone6**

All mobile carriers that enable the WiFi calling feature of iPhone6, are routing calls via Internet or PSTN, similar to the RBR patent. iPhone functionality to hand-off voice calls from 3G/4G to WiFi networks without calls disconnecting, is similar to the Uninterrupted patent.

**FaceTime (Video)**

As per the VirnetX court case, all FaceTime calls no longer go directly peer-to-peer, but via relay servers. Currently, FaceTime does not run video to PSTN handsets, although it is possible to send and receive video through 3G phones. Once Apple decides to send calls to those phones, the RBR patent will be in use.

**FaceTime Audio**

FaceTime Audio was recently introduced, which permits routing calls between PSTN and IP networks, in addition to pure Internet-to-Internet calls. Once Apple decides to send calls to PSTN, the RBR patent will be in use.

**The following table summarizes comparisons of the Voip-Pal applicable patented technologies and existing Apple FaceTime, FaceTime Audio, and iMessage services:**

[3] From the RBR patent Abstract: "In response to initiation of a call by a calling subscriber, a caller identifier and a callee identifier are received. Call classification criteria associated with the caller identifier are used to classify the call as a public network call or a private network call. A routing message identifying an address, on the private network, associated with the callee is produced when the call is classified as a private network call and a routing message identifying a gateway to the public network is produced when the call is classified as a public network call."

| Technical feature | Applicable Patent | FaceTime | FaceTime Audio | iMessage | Future Telco integration |
|---|---|---|---|---|---|
| Sending messages between iPhones | US 8542815 | | | In use, following VirnetX patent litigation case | Vital functionality |
| Sending messages to non-iPhone | US 8542815 | | | In use, for sending messages to PSTN | Vital functionality |
| Public/private call routing decision | US 8542815 | | | In use | Vital for routing messages in Internet and to PSTN |
| Internet to PSTN traffic via relays | US 8542815 | Will be used for directing calls to PSTN vide-enabled phones | | | Critical functionality for video call routing Internet to PSTN |
| Internet to PSTN traffic via relays | US 8542815 | | Will be used for directing calls to PSTN | | Critical functionality for audio call routing Internet to PSTN |
| VoLTE in iPhone6 | US 8542815 | | Will be used | | Core VoLTE functionality is RBR |
| Lawful Intercept | US 8422507 | Maybe used? | Maybe used? | Maybe used? | Important for application-level intercept (opposed to network tapping) |
| Enhanced 911 | US 8537805 | Will be used | Will be used | Will be used | Can be used as additional or primary source of emergency communication |
| Mobile Gateway | US 8630234 | Not used | Not used, but will be beneficial to use when | Not used, but will be beneficial | Valuable feature for consumers and service |

| | | | | | |
|---|---|---|---|---|---|
| | | | roaming | to use when roaming | providers |
| Uninterrupted | US 8675566 | Not used, but will be beneficial to use on the move | Not used, but will be beneficial to use on the move | Not used | In use with WiFi calling, to hand off voice calls from 3G/4G to WiFi networks without calls disconnecting |

**BENEFITS TO APPLE**

Voip-Pal's 6-patent portfolio resolves major challenges in the current interconnected VoIP and PSTN world: how to route a communication in private (Internet) and public (Legacy PSTN) domains and between them, and how to rate the call and charge for it. Communication includes audio, video, text, and multimedia messages. The foundation patent (Rating, Billing, and Routing, referenced as "RBR") is described along with the additional five Voip-Pal patents in Appendix A. Deployment opportunities are covered in Appendix B. Ownership of such patents could greatly increase Apple's value.

Voip-Pal owns the patented technologies needed to deploy comprehensive international VoIP systems, which in addition to providing a traditional closed user group are able to fully interoperate with the international telecommunications network.

The patent portfolio ensures that the resulting service for a subscriber is indistinguishable from that offered by a Telco operator, and can benefit from extensive revenues via calls, subscriptions, premium services, and number allocation. In addition, by supporting interconnect and standard call description records, very significant revenues result from call termination and interconnect revenues from fixed and mobile operators.

Large cell phone (iPhone) vendors, when teaming with data providers and backed by Voip-Pal patented technologies, would generate additional revenue for Apple by providing attractive voice/data packages to customers.

Furthermore, Android's operating system, either natively or via Google Play applications is, or will be, using telephony features similar to Voip-Pal's patented technologies. The Voip-Pal patents would give Apple's iOS a competitive advantage over the Android system.

## PROVIDERS USING VOIP-PAL TECHNOLOGIES

**Cell phone Operators:**

Verizon Wireless, T-Mobile, AT&T, Cricket Wireless, Sprint, MetroPCS, Boost Mobile, U.S. Cellular, Virgin Mobile, Ting, Liberty Wireless, China Mobile, Vodafone Group, Telefonica Group, China Unicom, Orange Group, China Telecom, Deutsche Telecom, etc.

**Internet Providers:**

Comcast, Time Warner Cable, Verizon, Cox, AT&T, Charter, Frontier, Suddenlink, CenturyLink, Cable One, DirecTV, Windstream, EarthLink, etc.

**Hardware Vendors:**

Samsung, Blackberry, all Android phones, Avaya, CISCO, Nortel, Siemens, Mitel, Polycom, Alcatel, Grandstream, NetGear, Zyxel, D-Link, Belkin, MagicJack, BasicTalk, etc.

**Social Network Providers:**

Viber, Twitter, etc.

## SUMMARY

As discussed, there are fundamental similarities in Apple's iMessage and Text Messaging with Voip-Pal's patented technologies. In addition, the core functions of VoLTE technology, to be used in iPhone6 with Verizon, are very similar to the Voip-Pal RBR patent, as well as the similarity of the Uninterrupted patent to the anticipated seamless hand-off of WiFi calls to a cellular network.

With WiFi calling and the future expansion of FaceTime and FaceTime Audio, the Voip-Pal patents could greatly increase Apple's value by expanding their functionality for customers.

Should Apple own the Voip-Pal technologies, it could leverage the patents with their data providers to obtain better prices, various associated telecommunications companies could be indemnified from using the patented technologies, and licensing fees can be charged to all other operators, enabling Apple to recoup the cost of acquiring the patents.

**Appendix A: VOIP-PAL'S SIX PATENTS**

**Voip-Pal's six patents** disclose the technology for voice and video calls, text and multimedia messaging - both for Internet multi-node and Internet-to-Legacy communications.

1. **Rating, Billing, and Routing engine** ("**RBR**"- producing routing messages for VoIP communications): US patent 8,542,815 is the foundation of any modern commercial VoIP system. It discloses the major challenge in current interconnected VoIP and PSTN networks – how to route a communication in private and public domains and between them, as well as how to rate it and charge for it. This base RBR patent has three independent claims 1, 27, 28 which disclose method and apparatus… "...for facilitating communication…" which definitely includes **voice calls, text and data messaging, audio and video, and online purchasing**. Priority date of this patent is in 2006, at which time legacy IP Centrex solutions dominated the market by Nortel CICM (Centrex IP Client Manager) and CISCO H323 protocols. Those legacy solutions proved to be non-scalable and not efficient for the modern world. Technology turned to SIP (Session Initiation Protocol), with its advanced voice and data call routing architecture. Multiple examinations of this patent by PCT, US examiners, and competitors have not discovered any prior art before 2006 on the market.

   RBR claim 1 clearly defines the following 2 points:

   **Internet-to-Internet call:**

   "when the call is classified as a private network call, producing a private network routing message for receipt by a call controller, said private network routing message identifying an address, on the private network, associated with the callee";

   **Internet-to-PSTN call:**

   "when the call is classified as a public network call, producing a public network routing message for receipt by the call controller, said public network routing message identifying a gateway to the public network."

   RBR claim 28 discloses:

   "A call routing **apparatus** for facilitating communications between callers and callees," – which can be not only a server, but a mobile phone, performing RBR functions.

   Android can have built-in RBR service, or RBR applications downloaded from Google Play and installed on Android. Whoever owns these patents, controls Android telephony functions.

2. **Allocating Charges for Communications Services ("Billing"):** US patent 8,774,378 was applied for in September 2013 as part of a continuation to the RBR patent. This technology strengthens the RBR patent and enhances the billing aspect of the RBR and its implementation. This technology will play a vital role as VoIP communication replaces legacy telephony and new fees and tariffs are assessed. System vendors, network providers, and mobile carriers are able to utilize this routing and metering technology to make VoIP more manageable and reliable.

3. **Advance Interoperability Solutions ("Uninterrupted" -** uninterrupted transmission of Internet protocol transmissions during end point changes): US patent 8,675,566. The patent allows the transfer of in-session digital sessions between disparate wireless technologies enabling subscribers to roam seamlessly between different WiFi, WiMax, 3G, and 4G cell technologies without losing a call. The patent technology demonstrates the future of Internet voice communication – calls should not be dropped when roaming from one transport provider to another.

4. **Mobile Gateway:** US patent 8,630,234. This patent allows a single subscriber device to connect automatically to WiFi, WiMax, and other wireless data connections. This technology can be applied to any modern cell phone allowing Internet calls to be transparent to users. Cell phones may be operated in roaming territory without incurring roaming charges. Mobile Gateway claims disclose the cell phone application:
   - intercepts user attempt to make a call in roaming territory;
   - requests and receives temporary local number from the local gateway, preferably over non-voice network;
   - allows cell phone to make the call to that number over cellular network; and
   - call is received on the local gateway and forwarded to the final destination over the Internet.

   The advantage of this roaming system is two-fold:
   1. On the subscriber side, it avoids roaming charges, because cellular call is local. Also, this call is completely transparent to subscriber. The caller doesn't know that the cell phone was making a call to some local number, instead of the long-distance number dialled.
   2. On the carrier side, this patent application retains the subscriber base on its cellular network, preserving investments in infrastructure. At the same time, it uses Internet to carry long-distance voice traffic. There is no need for applications like Skype and Vonage on cell phones, which are taking subscribers away from carrier.

   Every mobile call is now a local call.

5. **Lawful Intercept** ("**LI"** - intercepting VoIP communications and other data communications): US patent 8,422,507 discloses an "application service" type intercept (section 5.3 of ETSI standard TR 101 943 *"*Lawful Interception (LI): Concepts of Interception in a Generic Network Architecture*"*), that addresses government legislation to enable law enforcement agencies to perform scheduled and live intercepts on VoIP

telephone conversations. The advantage of this patent is that it is undetectable by the intercept target, as opposed to many other technologies. For example, Microsoft patent application 20110153809 "Legal Intercept" by Ghanem et al. from 2009, which is now in RCE (Request for Continuing Examination). The Voip-Pal patent does not divert audio flow to recording equipment. Instead, every media relay is capable of duplicating and recording audio flow. This way the call path for intercepted calls stays the same as for non-intercepted ones.

6. **Enhanced 911** ("**E911"** - emergency assistance calling for VoIP communications): US patent 8,537,805. This technology satisfies the major government requirement for an enhanced emergency response system, which is the ability to call back the person making an emergency call in the event of a dropped connection. Average VoIP systems do not provide this function; they display some non-routable number to the Emergency Center operator. Instead, this technology assigns a temporary DID (Direct Inward Dial) number for the emergency call.

This portfolio of patents covers the essential elements of a VoIP and messaging network including, but not limited to:

- Separation of signaling and media data flows;
- The principle of a public (Internet) network / private (VoIP) network call routing decision prior to call set up;
- Elimination of single points of failure common on VPN, VoIP, and PBX implementations;
- A system where IP addresses of call originator or call terminator are not visible to each other (or detectable by network sniffers) such that they only see media relay and call controller IP addresses by deploying back-to-back user agents B2BUA as call controllers;
- Efficient use of call controllers and routing controllers in strategic Internet hubs;
- Deployment of media relays and gateways anywhere in the Internet in accordance with subscriber distribution (media relays being controlled by call controllers);
- Elimination of network constraints from administrative, political, or geographical boundaries, and the ability to monitor or extract data records from any call originated or terminated from a user with a VoIP provider account anywhere in the world, as long as it has a VoIP provider account; and
- Maintenance of call session state in the routing controller (RBR engine); and transport of the communication session, via media relays.

**Appendix B: DEPLOYMENT OPPORTUNITIES FOR APPLE**

To deploy native VoIP applications on iPhones and the rest of i-family, given the scale of its current user base of ~500M subscribers, and for future expansion, Apple should:

- follow best current practice of Internet telephony, not proprietary systems. Skype had to introduce Fat servers and proxies to bridge private P2P with VoIP and PSTN networks to avoid scalability bottlenecks. The road to modern scalable technology has been paved by the RBR patent, as shown in Appendix A.

- provide government-legislated services, such as Public Safety 911 and Lawful Intercept.

Apple video applications **FaceTime** and **FaceTime Audio** are based on modern standards of SIP and RTP, and function over WiFi, 3G, and LTE – like many other Voice over Internet Protocol products on the market, including the Voip-Pal technologies.

There are substantial similarities in how FaceTime and FaceTime Audio operate with Voip-Pal patent US 8,542,815 (Rating, Billing, and Routing) – see Appendix A for details. This patent is the foundation of modern Internet Telephony, and it covers messaging as well, particularly iMessage.

With Apple's VoLTE launch on iPhone6, it is important to mention that VoLTE routing, billing, and rating functionality is covered by the RBR patent – see Appendix C.

To operate the iPhone voice application in roaming territory, Voip-Pal patent US 8,630,234 (Mobile Gateway) will be used. To carry a call in progress from one transport network to another (WiFi hot spots, GSM data, LTE) without dropping the call, Voip-Pal patent US 8,675,566 (Uninterrupted) is used.

To support enhanced 911 services, a modern telephony system should provide the ability to call back the person in an emergency, if the call is dropped –what patent US 8,537,805 (E911) enables. Modern Lawful Intercept must be truly undetectable with any sophisticated monitoring tools; meaning, the call flow should not be diverted to a recording facility – US 8,422,507 (Lawful Intercept) patent provides such nondetection. To apply proper charges to customers and multi-tier providers, and determine accurate allocation of taxes, RBR continuation patent US 8,774,378 (Billing) is used.

**Appendix C: BENEFITS TO VOICE OVER LTE (VoLTE)**

**Voice over LTE** (VoLTE) deploys functionality, already disclosed by four Voip-Pal patents: RBR, Lawful Intercept, E911, and Billing – especially by RBR. Two other patents, once implemented in VoLTE, Uninterrupted and Mobile Gateway, will significantly improve user VoLTE experience. Altogether, the six Voip-Pal patents, if integrated with VoLTE, will bring significant competitive advantage to carriers, overthrowing OTT applications like Skype.

1. **Rating, Billing, and Routing engine ("RBR"):** US patent 8,542,815 discloses core functionality of how to route VoIP calls in different networks. In VoLTE architecture those functions are performed by the following IMS (IP Multimedia Subsystem) blocks:
    a. S-CSCF (Serving Call Session Call Function) – central SIP endpoint
    b. HSS (Home Subscriber Server) – holds Service Profile (SP) which is a collection of user-specific information
    c. PCRF (Policy & Charging Rules Function)

    These blocks, as per the RBR patent, and in response to call initiation, (i) locate caller dialing profile with plurality of caller attributes, (ii) match some calling attributes with a portion of the callee identifier, classify the call as a private network call (Internet) or a public network call (PSTN), and (iii) produces routing messages identifying an address of callee in the private network or a gateway to the public network. Depending on whether S-CSCF is the registrar for callee (private call) or not (public call), it may query DNS for the address of callee's I-CSCF (Interrogate CSCF) – gateway to callee phone.

2. **Allocating Charges for Communications Services** ("**Billing" -** RBR Continuation)**:** US patent 8,774,378 further discloses charging functionality, performed in VoLTE architecture by PCRF and HSS above, and CDF (Charging Data Function) which generates CDRs (Call Detail Records) for postpaid service or OCR (Online Charging System) for prepaid service.

3. **Mobile Gateway:** US patent 8,630,234 discloses how a call in roaming territory becomes a local call; querying the list of local numbers on PSTN-Internet gateway and calling one of them instead of the long distance number, and lets the gateway complete the call via Internet. Apparently, VoLTE carriers may take advantage of the Mobile Gateway patent even further. Since it is natively connected to the Internet, it doesn't have to call a PSTN long distance number, but runs the call over the Internet. Moreover, if its IMS has a connection to the user's home IMS, a call might be set up between them, leading to even more savings for both carrier and user.

4. **Advanced Interoperability Solutions** (**"Uninterrupted"**)**:** US patent 8,675,566 discloses the Layer 3 technique to perform seamless handover of calls in progress, while moving from one transport provider to another (LTE to GSM or WiFi), based on session identifier

inside RTP header. VoLTE has a few of its own handover techniques, mainly radio handovers from one eNodeB to another eNodeB (VoLTE) or RNC (3G) tower - PS-PS (Packet to Packet Switched – VoLTE to VoLTE) or PS-CS (Packet to Circuit Switched – VoLTE to 3G) handover; the core must be updated afterwards. A native VoLTE handover works only inside one carrier, not between carriers. The Uninterrupted patent allows seamless handover between carriers, even different types of carriers (VoLTE, GSM data, WiFi). VoLTE architecture already has a P-GW element (Packet Data Network Gateway) which serves as a media relay. It must be updated with the Uninterrupted patent functionality: on the callee side – call not dropped but waits for media stream with the same SSRC identifier, on the caller side –the call is not torn down immediately if the caller disappears, letting the media stream come up on callee side with the same SSRC.

5. **Lawful Intercept** ("**LI**"): US patent 8,422,507 discloses public safety VoIP functionality, legislated for every carrier – how to intercept a call from or to intercept target, conducted over media relay. In VoLTE architecture, this function is performed by three entities in EPC (Evolved Packet Core): (1) MME (Mobility Managed Entity) for signaling, (2) S-GW (Serving Gateway) for roaming media, and (3) P-GW (Packet Data Network Gateway) for local media.

6. **Enhanced 911** ("**E911"):** US patent 8,537,805 discloses public safety VoIP functionality, legislated for every carrier – how to handle VoIP calls to Emergency number for all subscribers: those who have DID (Direct Inward Dial) number assigned and those who don't. In VoLTE architecture, this functionality it performed via MME by dedicated SIP entity E-CSCF (Emergency CSCF), which routes the call to PSAP (Public Safety Answering Point) – similar to the E911 patent. This patent is more advanced than VoLTE:
   - VoLTE subscriber can have multiple identities, like SIP URI, which may be not possible to call back by PSAP operator. E911 patent always provides PSTN DID number, which is always reachable from PSAP.
   - VoLTE architecture assumes that emergency flag is set up by user handset, according to statically assigned number, which might be wrong in roaming territory. E911 patent allows dynamic reconfiguration of the emergency number.

**4C. Attachment to E-Mail dated September 15 2014 – Prior Art Review**

# PRIOR ART REVIEW FOR VOIP-PAL.COM, INC. OF TELEPHONY PATENTS: 8,422,507; 8,542,815; 8,630,234; 8,537,805; 8,675,566 & 8,774,378

An extensive infringement and invalidity patent review

*Prepared for*
*Voip-Pal.com, Inc.*

*by*

**Thomas and Thomas,**
**Attorneys at Law**
**2740 East 1700 North**
**Layton, Utah 84040**

**Client Privileged Information**

**Prior Art Review of Voip-Pal.com, Inc. Telephony Patents**

**9/9/2014**

**This review includes the following US Patents:**

Producing Routing Messages for VoIP Communications, US Patent 8,542,815

Intercepting VoIP Communications and Other Data Communications, US Patent 8,422,507

Emergency Assistance Calling for VoIP Communications, US Patent 8,537,805

Mobile Gateway, US Patent 8,630,234

Uninterrupted Transmission of Internet Protocol Transmissions during Endpoint Changes, US Patent 8,675,566

Allocating Charges for Communications Services, US Patent 8,774,378

**Client: Voip-Pal.com, Inc.**

**Thomas and Thomas, Attorneys at Law**
**2740 East 1700 North**
**Layton, Utah 84040**

**Client Privileged Information**

# Table of Contents


**US Patent 8,542,815: VoIP Routing Billing and Rating** ..... 4

**A. Scope of Search** ..... 4

**B. Field of the Invention and Related Art** ..... 4

**1. Field of Invention** ..... 4

**2. Description of Related Art** ..... 4

**C. Summary of the Invention** ..... 5

**D. Summary of Major Claims** ..... 6

**E. Summary of Major Prior Art** ..... 7

**F. Additional Sources Considered** ..... 9

**G. Analysis** ..... 9

**US Patent 8,422,507: LAWFUL INTERCEPT** ..... 10

**A. Scope of Search** ..... 10

**B. Field of the Invention and Related Art** ..... 10

**1. Field of Invention** ..... 10

**2. Description of Related Art** ..... 10

**C. Summary of the Invention** ..... 11

**D. Summary of Major Claims** ..... 13

**E. Summary of Major Prior Art** ..... 14

**F. Additional Sources Considered** ..... 17

**G. Analysis** ..... 18

**US Patent 8,537,805: Emergency Assistance Calling for VoIP Communications** ..... 19

**A. Scope of Search** ..... 19

**B. Patent Related Art Summary and Claims** ..... 19

**1. Field of Invention** ..... 19

**2. Description of Related Art** ..... 19

**C. Summary of the Invention** ..... 20

**D. Summary of Major Claims** ..... 20

**E. Summary of Major Prior Art** ..... 21

**F. Additional Sources Considered** ..... 27

**G. Analysis** ..... 27

**US Patent 8,630,234: Mobile Telephony** ..... 28

**A. Scope of Search** ..... 28

**B. Patent Related Art Summary and Claims** ..... 28
**C. Summary of the Invention** ..... 28
**D. Summary of Major Claims** ..... 29
**E. Summary of Major Prior Art** ..... 29
**F. Analysis** ..... 32
**US Patent 8,675,566: Uninterrupted transmission of internet protocol transmissions during endpoint changes** ..... 33
**A. Scope of Search** ..... 33
**B. Field of the Invention and Related Art** ..... 33
**1. Field of Invention** ..... 33
**2. Description of Related Art** ..... 33
**C. Summary of the Invention** ..... 34
**D. Summary of Major Claims** ..... 34
**E. Summary of Major Prior Art** ..... 38
**F. Additional Sources Considered** ..... 41
**G. Analysis** ..... 42
**US 8774378: Allocating Charges for Communication Services** ..... 43
**A. Scope of Search** ..... 43
**B. Field of Invention and Related Art** ..... 43
**1. Field of Invention** ..... 43
**2. Description of Related Art** ..... 43
**C. Summary of the Invention** ..... 44
**D. Summary of Major Claims** ..... 45
**E. Summary of Major Prior Art** ..... 46
**F. Additional Sources Considered** ..... 48
**G. Analysis** ..... 48

# US PATENT 8,542,815: VOIP ROUTING BILLING AND RATING

**Publication date Sep 24, 2013**
**Filing date Nov 1, 2007**
**Priority date Nov 2, 2006**

## A. SCOPE OF SEARCH

1. The prior art search comprises the period between the filing dates 1990 and 2007. The date 1990 began the search period because VoIP was developed in conjunction with the commercialization of internet in the 1990s. The end date 2007 was selected as the filing date cutoff because the priority date listed on US Patent 8,542,815 is November 2, 2006 and in order to predate the priority date and qualify for patent protection an applicant would need to file within a year of public disclosure under pre and post-Leahy Smith America Invents Act 35 USC 102(b).

2. The search included the search engines of the World Intellectual Property Organization (WIPO), Google Patent, Google Scholar and the United States Patent and Trademark Office. The search terms comprise, in various combinations, the following terms: routing, billing, rating, VoIP, subscriber profiles. The prior art search further comprises a review of patent citations and references from pertinent patents, found in the word searches, to capture any additional patent publications not captured in the word searches including broadening reissue patents.

3. The Search included all US, CA and European patents and applicable professional/technical articles identified by the search strings.

## B. FIELD OF THE INVENTION AND RELATED ART

### 1. Field of Invention

This invention relates to methods and apparatus for routing, rating and billing voice over IP and other IP media-based communications.

### 2. Description of Related Art

Existing VoIP systems do not allow for high availability and resiliency in delivering Voice Over IP based Session Initiation Protocol (SIP) Protocol service over a geographically dispersed area such as a city, region or continent. Most resiliency originates from the provision of IP based telephone services to one location or a small number of locations such as a single office or network of branch offices.

In recent years, Internet protocol (IP) telephones have been seen as an increasingly attractive alternative to traditional public switched telephone network (PSTN) phones. The rapid growth of "smart" cellular phones that allow the user access to the Internet from their cellular device has pushed traditional technologies to provide increased interoperability of IP phones within an existing topography of cellular telephony and traditional switched circuit networks (SCN). *While some interoperable services have been provided, the differences between IP networks which are based upon "packets" of data that "hop" between multiple networks to complete communications and PSTN networks that communicate with "end to end" communications have hampered true interoperability.*

*One of the advantages of PSTN's point to point communication is that it allows complex local network nodes that contain extensive information about a local calling service area* including user authentication and call routing. The PSTN network typically aggregates all information and traffic into a single location or node,

processes it locally and then passes it on to other network nodes, as necessary, by maintaining route tables at the node. This information provides much easier routing, rating and billing of PSTN-based calls.

## C. SUMMARY OF THE INVENTION

The invention includes processes and implementing apparatuses for *operating a call routing controller to facilitate communication between callers and callees in a system in which there a many nodes with which callers and callees are associated.*

*As a call is placed by a subscriber, the routing controller provides a caller identifier and a callee identifier. The process also includes call classification criteria associated with the caller identifier that identifies the call as a public network call or a private network call.* The call classification criteria may involve searching a database to locate a record identifying calling attributes associated with a caller that are identified by the caller identifier.

*Each database record is a dialing profile with a username associated with the caller, a domain associated with the caller, and at least one calling attribute.* The attribute might be an international dialing digit, IDD, a national dialing digit, an area code or other pertinent information. For example, the attribute might be a direct in dial (DID) record that associates the caller with a public telephone number.

*The process and associated apparatus may identify that the information in the dialing profile may need to be reformatted, if the digit count is inappropriate for the call, based upon comparing the number called with the public telephone number of the caller.* For example, if a dialing profile included an IDD or NDD that was not needed because the destination of the call was domestic, the process would reformat the information so that it would allow the call to be completed. If, in another case, there was a missing IDD or NDD, the process would add the appropriate code based upon the area code.

*If the call is identified as a private network call, a routing message is created that identifies an address, on the private network, associated with the callee.* Analogously, *if the call is classified as a public network call, a routing message is created that identifies a gateway to the public network*. When the node associated with the caller is not the same as the node associated with the callee, the process involves producing a routing message including the caller identifier, the reformatted callee identifier and an identification of a private network node associated with the callee and communicating the routing message to a call controller.

If the node associated with the caller is the same as the node associated with the callee, the process determines whether to connect the call, forward the call to another party, or block the call and direct the caller to a voicemail server associated with the callee. Producing the routing message may involve producing a routing message having an identification of at least one of the callee identifier, an identification of a party to whom the call should be forwarded and an identification of a voicemail server associated with the callee.

*Producing a routing message for a call to a public network will identify a gateway to the public network and may involve searching a database of route records associating route identifiers with dialing codes or supplier records to find a route record having a dialing code having a number pattern matching at least a portion of the reformatted callee identifier.* The data structure includes master list records with fields for associating a dialing code with respective master list identifiers and supplier list records linked to master list records by the master list identifiers. The supplier list records are database fields for associating with a communications services supplier, a supplier id, a master list id, a route identifier and a billing rate code, so that communications services suppliers are associated with dialing codes, in order that dialing codes can be used to locate suppliers capable of providing a communications link associated with a given dialing code. The routing message is used by a call routing controller as a part of the communications system.

*The process and associated apparatus may involve loading a routing message buffer with the reformatted callee identifier and an identification of specific routes associated respective ones of the supplier records associated with the route record and loading the routing message buffer with a time value and a timeout value.*

*The process can include various methods for rating, or establishing the cost to be associated with call. These methods include the ability to calculate time, distance and type of communication in order to assign a cost. Calculating the cost per unit cost may involve a database with a markup type indicator, a markup value and a billing pattern and setting a reseller rate equal to the sum of the markup value and the buffer rate.*

## D. SUMMARY OF MAJOR CLAIMS

1. A process for operating a call routing controller to facilitate communication between callers and callees in a system comprising a plurality of nodes with which callers and callees are associated, the process comprising:
responding to initiation of a call by a calling subscriber; receiving a caller identifier and a callee identifier;
locating a caller dialing profile comprising a username associated with the caller and a plurality of calling attributes associated with the caller; determining a match when at least one of said calling attributes matches at least a portion of said callee identifier; classifying the call as a public network call when said match meets public network classification criteria and classifying the call as a private network call when said match meets private network classification criteria;
when the call is classified as a private network call, producing a private network routing message for receipt by a call controller, said private network routing message identifying an address, on the private network, associated with the callee; when the call is classified as a public network call, producing a public network routing message for receipt by the call controller, said public network routing message identifying a gateway to the public network.
27. A non-transitory computer readable medium encoded with codes for directing a processor to execute a method of operating a call routing controller to facilitate communication between callers and callees in a system comprising a plurality of nodes with which callers and callees are associated, the method comprising: responding to initiation of a call by a calling subscriber, receiving a caller identifier and a callee identifier; locating a caller dialing profile comprising a username associated with the caller and a plurality of calling attributes associated with the caller; determining a match when at least one of said calling attributes matches at least a portion of said callee identifier; classifying the call as a public network call when said match meets public network classification criteria and classifying the call as a private network call when said match meets private network classification criteria;
when the call is classified as a private network call, producing a private network routing message for receipt by a call controller, said private network routing message identifying an address, on the private network, associated with the callee; and when the call is classified as a public network call, producing a public network routing message for receipt by a call controller, said public network routing message identifying a gateway to the public network.
28. A call routing apparatus for facilitating communications between callers and callees in a system comprising a plurality of nodes with which callers and callees are associated, the apparatus comprising: receiving means for receiving a caller identifier and a callee identifier, in response to initiation of a call by a calling subscriber;
means for locating a caller dialing profile comprising a username associated with the caller and a plurality of calling attributes associated with the caller; means for determining a match when at least one of said calling attributes matches at least a portion of said callee identifier; means for classifying the call as a public network call when said match meets public network classification criteria; means for classifying the call as a private network call when said match meets private network classification criteria; means for producing a private network routing message for receipt by a call controller, when the call is classified as a private network call, said private network routing message identifying an address, on the private network, associated with the callee; and means for producing a public network routing message for receipt by a call controller, when the call is classified as a public network call, said public network routing message identifying a gateway to the public network.
41. The apparatus …further comprising searching means for searching a database of records to locate a Direct-Inward-Dial (DID) bank table record associating a public telephone number with said reformatted callee identifier and wherein said means for classifying the call as a private network call is operably configured to classify the call as a private network call when said DID bank table record is found and said means for classifying the call as a public network call is operably configured to classify the call as a public network call when a DID bank table record is not found.
54. A process for operating a call routing controller to establish a call between a caller and a callee in a communication system, the process comprising: responding to initiation of a call by a calling subscriber, locating a caller dialing profile comprising a plurality of calling attributes associated with the caller; and when at least one of said calling attributes and at least a portion of a callee identifier associated with the callee match and when the match meets a private network classification criterion, producing a private network routing message for receipt by a call controller, said private network routing message identifying an address, on a private network, the address being associated with the callee; and when at least one of said calling attributes and said at least said portion of said callee identifier associated with the callee match and when the match meets a public network classification criterion, producing a

public network routing message for receipt by a call controller, said public network routing message identifying a gateway to a public network.
74. A call routing controller apparatus for establishing a call between a caller and a callee in a communication system, the apparatus comprising: a processor operably configured to: access a database of caller dialing profiles wherein each dialing profile associates a plurality of calling attributes with a respective subscriber, to locate a dialing profile associated with the caller, in response to initiation of a call by a calling subscriber; and
produce a private network routing message for receipt by a call controller, said private network routing message identifying an address, on a private network, through which the call is to be routed, when at least one of said calling attributes and at least a portion of a callee identifier associated with the callee match and when the match meets a private network classification criterion, the address being associated with the callee; and
produce a public network routing message for receipt by a call controller, said public network routing message identifying a gateway to a public network, when at least one of said calling attributes and said at least said portion of said callee identifier associated with the callee match and when the match meets a public network classification criterion.
77. [An] apparatus …wherein said processor is further configured to: access the database of caller dialing profiles to locate a callee dialing profile for the callee when said callee identifier identifies a callee that is associated with the same network node as said caller; and retrieve call handling information associated with the callee, where said call handing information is available, said call handing information including at least one of call blocking information, call forwarding information, and voicemail information.
93. A call routing controller apparatus for establishing a call between a caller and a callee in a communication system, the apparatus comprising: means for accessing a database of caller dialing profiles wherein each dialing profile associates a plurality of calling attributes with a respective subscriber, to locate a dialing profile associated with the caller, in response to initiation of a call by a calling subscriber; and means for producing a private network routing message for receipt by a call controller, said private network routing message identifying an address, on a private network, through which the call is to be routed, when at least one of said calling attributes and at least a portion of a callee identifier associated with the callee match and when the match meets a private network classification criterion, the address being associated with the callee; and
means for producing a public network routing message for receipt by a call controller, said public network routing message identifying a gateway to a public network when at least one of said calling attributes and said at least said portion of said callee identifier associated with the callee match and when the match meets a public network classification criterion.
96. [An] apparatus …further comprising: means for accessing the database of caller dialing profiles to locate a callee dialing profile for the callee when said callee identifier identifies a callee that is associated with the same network node as said caller; and means for retrieving call handling information associated with the callee, where said call handing information is available, said call handing information including at least one of call blocking information, call forwarding information, and voicemail information.

## E. SUMMARY OF MAJOR PRIOR ART

The graph below lists some of the more pertinent patents located during the prior art search and describes how said patents are distinguished from patent US 8,542,815. The patents are organized first by their US patent number in ascending order followed by their publication numbers from other jurisdictions. In cases where there was not a patent granted, other US patent publications will follow the granted patents. Also, any foreign patents, without US filings, are listed in alphabetical and numerical ascending order.

| Patent | Dates | Distinguished |
|---|---|---|
| **US7400881, CN101069390A, CN101069390B, EP1829300A1, EP1829300A4, EP1829300B1, US20060142011,** | **Priority date Dec 23, 2004**<br><br>**Filing date Apr 14, 2005** | US 7400881 teaches a method for routing calls and messages in a communication system. A mobile station registers to a call control node using a logical name. The logical name is mapped in a directory to an international mobile subscriber identity. The call control node performs a location update to a home location register using the international mobile subscriber identity. The mobile station is reached using a called party number. As a terminating call or |

| | | |
|---|---|---|
| **WO2006067269A1** | **Pub date Jul 15, 2008** | message is received to a core network, a roaming number is allocated for the mobile station, and the call or message is routed to the call control entity currently serving the mobile station. This patent does not anticipate US 8,542,815. Although the international mobile subscriber identity taught in US 7400881 involves a database with some limited resemblance to the caller dialing profiles of US 8,542,815 , the information in the database record is far less comprehensive than that of patent US 8,542,815 and the use of the database solely involves allocating a roaming local number to allow for local rates to be charged to the subscriber. It anticipates none of the routing, rating or billing systems of US 8,542,815 . |
| **US 7664495, US20100105379** | **Priority date Apr 21, 2005**<br><br>**Filing date Dec 5, 2005**<br><br>**Publication date Feb 16, 2010** | US 7664495 teaches systems and methods that provide a single E.164 number for voice and data call redirection and telephony services such as caller identification, regardless of in which type of network a dual mode mobile device operates. When the dual mode device registers and is active in a GSM network, temporary routing and status updates are triggered and resultant information is maintained in both networks. A mobile terminated call is routed through an enterprise WLAN with call control within the enterprise being handled by SIP or H.323 signaling, and the call is redirected to the mobile device in the GSM network, where call control is assumed by the SS7 network. Services are provided using the protocols native to the active network, and the single E.164 is used consistently along with or lieu of the temporary routing information for subscriber identity specific functions, such as caller identification and voice mail. The use of a single E.164 number for a dual mode mobile device has some similarity to the assignment of a single number in US 8,542,815, but the nature of the database and the interoperability of the system are significantly different that the methods and functions disclosed in the instant patent. |
| **US7068668,**<br><br>**US7068668, US7486667, US8125982, US8724643, US20030095539, US20060251056, US20090129566, US20120113981, US20140211789** | **Priority date Jan 7, 2000**<br><br>**Filing date Jan 7, 2000**<br><br>**Publication date Jun 27, 2006** | A real-time interface between the public switched telephone network (PSTN) and an Internet Protocol (IP) network provides voice to data and data to voice conversion between the PSTN and the IP network in a seamless process. The interface, a central communication network, performs Class 5 switching between the PSTN and the IP network, besides providing enhanced services. Receiving a call, the central communication network simultaneously routes the call to a plurality of preprogrammed numbers on the PSTN and on the IP network. This patent does provide a real-time interface between a PSTN and an IP system, but the role of stored number is to facilitate group broadcast through a centralized server. There is no equivalent to the dialing profile of US 8,542,815, nor to the purposes and effects of the interoperable systems it provides. |
| **US8204044, CN101095329A, CN101095329B, CN102833232A, DE112005003306T5, US7593390, US8605714,** | **Priority date Dec 30, 2004**<br><br>**Filing date Sep 21, 2009** | The method includes receiving a request from a first mobile device to invite a second mobile device to participate in a VoIP session. The second device may be identified in the request by a network identifier. The network identifier is related to a mobile IP (MIP) address of the second device and a second IP address. An invitation is sent to the MIP address of the second device which may include a MIP address of the first device and a first IP address. A response to |

| | | |
|---|---|---|
| **US20060146797, US20100008345, US20120250624, WO2006072099A1,** | **Publication date Jun 19, 2012** | the invitation may be received from the second device. The response may be modified to include a first IP header that includes the MIP address of the second device and a second IP header to include the second IP address. The modified response is forwarded to the first device. After receipt of the modified response, the first device is configured to establish an IP connection for VoIP communication with the second device. This patent uses a "network identifier" related to the mobile IP address which appears to serve one of the functions of the dialing profile of the instant patent. However, the network identifier is, at most, a single element of the database that comprises the dialing profile. Functionally this patent suggests only a small part of the routing and none of the rating and billing disclosed in US 8,542,815. |
| **US 7995589, EP1266516A2, EP1266516B1, US6934279, US20060007940, WO2001069899A2, WO2001069899A3** | **Priority date Mar 13, 2000**<br><br>**Filing date Aug 23, 2005**<br><br>**Publication date Aug 9, 2011** | A method and apparatus of communicating over a data network includes providing a user interface in a control system for call control and to display information relating to a call session. The control system communicates one or more control messages (e.g., Session Initiation Protocol or SIP messages) over the data network to establish a call session with a remote device in response to receipt of a request through the user interface. One or more commands are transmitted to a voice device associated with the control system to establish the call session between the voice device and the remote device over the data network. A Real-Time Protocol (RTP) link may be established between the voice device and the remote device. This patent does not anticipate the sophisticated database and the associated routing, billing and rating functions of US 8,542,815. |

## F. ADDITIONAL SOURCES CONSIDERED

Lin, Yi-Bing, Whai-En Chen, and C-H. Gan. "Effective VoIP call routing in WLAN and cellular integration." Communications Letters, IEEE 9.10 (2005): 874-876.

Meddour, Djamal-Eddine, et al. "SINR-based routing in multi-hop wireless networks to improve VoIP applications support." Consumer Communications and Networking Conference, 2007. CCNC 2007. 4th IEEE. IEEE, 2007.

Sripanidkulchai, Kunwadee, Zon-Yin Shae, and Debanjan Saha. "Call routing management in enterprise VoIP networks." Proceedings of the 2007 SIGCOMM workshop on Internet network management. ACM, 2007.

## G. ANALYSIS

Patent US 8,542,815 is not anticipated by the reviewed prior art which involved routing, billing and rating of VoIP telephony and interoperability of VoIP, cellular telephony and PSTN by routing that involves a database that associates the subscriber with a DID number, a local relay and other routing information. Some patent publications teach methods to associate IP telephony with a DID number. Other publications teach methods to route cellular communication using stored routing information. None include the sophisticated database and associated routing, billing and rating structures taught by US 8,542,815, nor has the prior art review suggested any likelihood that the innovations taught by US 8,542,815 would be considered "obvious" extensions of the prior art.

# US PATENT 8,422,507: LAWFUL INTERCEPT

**Publication date** **Apr 16, 2013**
**Filing date** **Nov 29, 2007**
**Priority date** **Nov 29, 2006**

## A. SCOPE OF SEARCH

1. The prior art search comprises the period between the filing dates 1990 and 2007. The date 1990 began the search period because VoIP was developed in conjunction with the commercialization of internet in the 1990s. The end date 2007 was selected as the filing date cutoff because the priority date listed on US Patent 8,422,507 is November 29, 2006 and in order to predate the priority date and qualify for patent protection an applicant would need to file within a year of public disclosure under pre and post-Leahy Smith America Invents Act 35 USC 102(b).

2. The search included the search engines of the World Intellectual Property Organization (WIPO), Google Patent, Google Scholar and the United States Patent and Trademark Office. The search terms comprise, in various combinations, the following terms: intercepting, VoIP, data, media, communications. The prior art search further comprises a review of patent citations and references from pertinent patents, found in the word searches, to capture any additional patent publications not captured in the word searches including broadening reissue patents.

3. The search included all US, CA and European patents and applicable professional/technical articles identified by the Google Patent search strings which dealt with VoIP and other data communication intercepts.

## B. FIELD OF THE INVENTION AND RELATED ART

### 1. Field of Invention

This invention relates to data communications and methods and apparatus for intercepting data communications, particularly voice over IP data communications, in an IP network.

### 2. Description of Related Art

*Legal Surveillance.* The term "lawful intercept" is used to describe a procedure which allows law enforcement agencies to perform electronic surveillance of telecommunications. Within the framework of traditional telecommunications networks, such as, for example, the Public Switched Telephone Network (PSTN) or cellular networks, lawful intercept generally presents a purely economic problem for the service providers that have to ensure that sufficient interception equipment and dedicated links to the law enforcement agencies have been deployed to satisfy lawful intercept requirements mandated by law.

*In the context of Voice over Internet Protocol (VoIP) communications, in addition to the economic problems mentioned above, lawful intercept presents significant technological challenges which often make compliance with legally mandated lawful intercept requirements exceedingly difficult.*

*Technological Problems Associated with Lawful Intercept of VoIP Telephony.* Traditional telecommunications networks are "connection-oriented" or "circuit-switched". Once the circuit is established, all communications traverse from end to end. Interception of such communications is easy as the service provider can "tap" the circuit at any point in the network that is under its lawful control.

*Connectionless VoIP Networks.* In contrast to circuit-switched networks, IP-based networks are "connectionless" by design. A connectionless IP network essentially comprises a plurality of interconnected

network devices (routers) which establish a plurality of paths from any point on the network to any other point.

*Packetized Data*. Information that needs to traverse an IP network is divided into small "packets", each one comprising an IP header containing source and destination addressing information, and service flags; and user payload..

*Hop by Hop Path.* The specific path that each packet in a communication between parties takes across an IP network is not determined in advance such as in a circuit-switched network. The path is defined on a hop-by-hop basis (router-by-router), each router at which the packet arrives examines the source and destination addresses contained in the IP header and applies a number of service variables such as hop-count (number of routers between the current router and the destination), latency and bandwidth of available links, and administrative considerations such as inter-provider agreements, to determine the next hop to which the packet will be forwarded.

*Impossibility of Determining VoIP Paths in Advance*. Because the service variables change dynamically, for example in response to a failure of a link in the network, the available paths may change significantly and it is impossible to reliably predict the path or paths that the packets that comprise a specific a specific communication will traverse.

*User Datagram Protocol* (UDP) *Encapsulated IP Packets of Audio Information*. The problem of lawful intercept in VoIP systems is further exacerbated by the distributed technologies often utilized in such systems. While a VoIP caller typically communicates with a VolP call controller to facilitate the connection to the VoIP callee, the actual communication between the parties typically occurs by establishing a direct IP connection between them using the User Datagram Protocol (UDP) to encapsulate audio information into IP packets.

*UDP Packets May Take Any Available Path.* These packets may take any available path across the IP network as described above. Even if a service provider could place an interception device at every point in the network through which a subscriber's packet could traverse, in order to provide a useful copy of the communication to a law enforcement agency, the service provider would have to reassemble all of the intercepted packets at a single device and only then pass the result to the law enforcement agency.

## C. SUMMARY OF THE INVENTION

The invention provides methods and apparatuses for intercepting communications in an Internet Protocol (IP) network.

*Dialing Profiles with a Unique Username for Each Subsciber*. The method involves maintaining dialing profiles for respective subscribers to the IP network, each dialing profile including a username associated with the corresponding subscriber.

*Associating Intercept Information with the Dialing Profile*. The method also involves associating intercept information with the dialing profile of a subscriber whose communications are to be monitored.

*Intercept Information Includes Criteria for Intercept and Destination.* The intercept information, including determination information for determining whether to intercept a communication involving the subscriber and destination information identifying a device to which intercepted communications involving the subscriber are maintained.

*When the Criteria are met, the Information is sent to a Media Relay.* When the determination information meets intercept criteria, the information is sent to a media relay through which the communications involving the subscriber will be conducted or are being conducted to cause the media relay to send a copy of the communications to a mediation device specified by the destination information.

*Intercept information is Associated with the Dialing Profile*. Associating intercept information may involve associating the intercept information with the dialing profile when communications involving the subscriber are either in or not in progress.

*Determination of Information that Meets the Intercept Criteria Produces a Routing Message*. The method involves producing a routing message for routing communications involving the subscriber through components of the IP network and determining whether the determination information meets the intercept criteria prior to producing the routing message and including at least some of the intercept information in the routing message when the determination information meets the intercept criteria.

*The Routing Message Results in Communications Being Conducted Through a Pre-associated Media Relay*. The method involves identifying and associating a media relay through which communications involving the subscriber will be conducted in response to the routing message.

*The method may involve invoking an intercept request message handler to find a dialing profile associated with the subscriber whose communications are to be monitored, and to perform the step of associating the intercept information with the dialing profile*, and to determine whether the intercept criteria are met, and identify a media relay through which the communications are being conducted.

*The method may involve maintaining active call records for communications in progress, and the active call records may include a username identifier and a media relay identifier identifying the media relay through which the communications are being conducted and identifying a media relay through which the communications are being conducted may involve locating an active call record associated with communications of the subscriber whose communication are to be monitored to find the media relay associated with the communications.*

*DID Records Associating PST Numbers with Usernames and Dialing Profiles are Stored.*. The method may involve maintaining direct-inward-dialing (DID) records associating PST telephone numbers with usernames of users subscribing to the IP network, and finding a dialing profile associated with the subscriber whose communications are to be monitored may involve finding a username in a DID record bearing a PSTN number associated with the subscriber whose communications are to be monitored. The username may be used to locate a dialing profile associated with the username.

*The Interceptions, Data Associations, Media Gateway and Routing Functions May be Implemented in an Apparatus.* In accordance with another aspect of the invention, there is provided an apparatus for intercepting communications in an Internet Protocol (IP) network. The apparatus includes provisions for maintaining dialing profiles for respective subscribers to the IP network, each dialing profile including a username associated with the corresponding subscriber. The apparatus also includes provisions for associating intercept information with the dialing profile of a subscriber whose communications are to be monitored, the intercept information including determination information for determining whether to intercept a communication involving the subscriber, and destination information identifying a device to which intercepted communications involving the subscriber are to be sent. The apparatus further includes provisions for communicating with a media relay through which the communications involving the subscriber will be conducted or are being conducted to cause the media relay to send a copy of the communications to a mediation device specified by the destination information, when the determination information meets intercept criteria.

*By employing a media relay, all VoIP communications traverse a point in the VoIP system that is under a provider's control and at which the communications can be copied in real-time to a mediation device that passes the intercepted communication to a law enforcement agency.*

*By maintaining dialing profiles for respective subscribers and associating intercept information of the type described, with the dialing profiles of subscribers whose communications are to be monitored, the dialing profile can serve as the source of determination information for determining whether or not communications involving the subscriber will be monitored and for providing destination information for specifying where the copy of the communications is to be sent.* Use of the dialing profile in this manner easily facilitates the dialing profile to be considered a respository for intercept information for a given subscriber and this respository can be addressed whether a call is being initiated or in progress, thereby simplifying control algorithms because they can cooperate with a common source and format of data in the dialing profile.

## D. SUMMARY OF MAJOR CLAIMS

1. A method for intercepting communications in an Internet Protocol (IP) network system in which *communications occur through a media relay, the method includes: determining whether information associated with a subscriber dialing profile meets intercept criteria. When the information meets the intercept criteria, the same media relay through which communications are relayed produces a copy of the communications and sends it to a mediation device which is identified by information in the subscriber's dialing profile.*

2. The method… in *which a routing message identifies a media relay through which communications involving the subscriber will be conducted and includes an identification of the media relay in the routing message, so that the identified media relay acts as the relay through which communications between the subscriber and the another party are relayed.*

3. The method … in which *determination information and destination information are associated with the dialing profile of the subscriber, the intercept request message includes the determination information and the destination information.*

9. The method …involving an intercept request message handler which:

*a) finds a dialing profile associated with the subscriber whose communications are to be monitored;*

*b) associates the determination information and the destination information with the dialing profile;*

*c) determines whether the intercept criteria are met; and*

*d) identifies a media relay through which the communications between the subscriber and the another party are relayed.*

11. The method …in which *the dialing profile includes a username identifier and maintains active call records for communications in progress. The active call record includes a username identifier and a media relay identifier that identifies the media relay through which the communications are being conducted.*

12. The method of claim 11, in which *direct-in-dial (DID) records associate Public Switched Telephone Network (PSTN) telephone numbers with the usernames of subscribers so that the PSTN telephone number can be used to locate the dialing profile of a subscriber* by referencing the DID records to locate the dialing profile associated with the username.

13. The method of claim 3, in which *determination information and destination information is included in intercept information fields in the dialing profile of a subscriber* whose communications are to be monitored.

14. An *apparatus for intercepting communications in an Internet Protocol (IP) network. The apparatus includes:*

*a. means for accessing dialing profiles of subscribers of the IP network.*

*i. The subscriber dialing profiles include intercept information comprised of:*

*1. determination information, which determines whether a call meets the criteria for monitoring and*

*2. destination information which identifies a mediation device to which intercepted communications are sent*;

b. means for *determining whether the determination information meets intercept criteria*;

*c.* means for *producing a separate routing message, which includes some of the determination and destination information, for routing communications involving the subscriber through components of the IP network after determining that the determination information meets the intercept criteria,*

d. means for, in response to the routing message, *causing the same media relay through which communications between the subscriber and the another party are relayed to produce a simultaneous copy of the communications between the subscriber and the another par*ty, and

e. means for, *in response to the routing message, causing the same media relay to send the copy of the communications to a mediation device identified by the destination information.*

27. An *apparatus for intercepting communications in an Internet Protocol (IP) network, the apparatus comprising: a module configured to access dialing profiles associated with respective subscribers of the IP network, at least one of the dialing profiles being associated with a subscriber whose communications are to be monitored, the dialing profile of the subscriber whose communications are to be monitored including intercept information including determination information for determining whether to intercept a communication involving the subscriber, and destination information identifying a mediation device to which intercepted communications involving the subscriber are to be sent; a module configured to determine whether the determination information meets intercept criteria; a module configured to produce a routing message for routing communications involving the subscriber through components of the IP network, after the determining module has determined that the determination information meets the intercept*

*criteria, the routing message being separate from any message sent between the subscriber and the another party, and the routing message including at least some of the determination information and destination information associated with the subscriber dialing profile; a module configured to cause, in response to the routing message, the same media relay through which communications between the subscriber and the another party are relayed to produce a copy of the communications between the subscriber and the another party, while the media relay relays the communications between the subscriber and the another party; and a module configured to cause, in response to the routing message, the same media relay to send the copy of the communications to a mediation device identified by the destination information*.

## E. SUMMARY OF MAJOR PRIOR ART

The graph below lists some of the more pertinent patents located during the prior art search and describes how said patents are distinguished from patent US 8,422,507. The patents are organized first by their US patent number in ascending order followed by their publication numbers from other jurisdictions. In cases where there was not a patent granted, other US patent publications will follow the granted patents. Also, any foreign patents, without US filings, are listed in alphabetical and numerical ascending order.

| Patent | Dates | Distinguished |
|---|---|---|
| **US 20040202295, DE60201827D1, DE60201827T2, EP1389862A1, EP1389862B1** | **Priority Date Aug 8, 2002**<br><br>**Filing date Jul 25, 2003**<br><br>**Pub Date Oct 14, 2004** | US Patent Application 20040202295 provides an excellent summary of the prior art with respect to undetectable lawful intercept of IP signals at the time of its publication in 2004. Its teachings include modification of the Session Description Protocol (SDP) to allow a marker in a message to be intercepted to be identified by a Session Initiation Protocol (SIP) proxy server or an Media Gateway Controller (MGC). If the marker is detected by the SIP server or the MGC, then an additional set of instructions must be generated by the identifying device to instruct a Real-time Transport Protocol (RTP) proxy server to create channels to bypass a media stream to be intercepted via an intermediate storage medium. It does not described the method for modification of the SDP marker, does not identify methods for the storage of data associated with the unidentified markers, nor does it identify the method of determination that identifies whether the call to be monitored meets criteria.<br>US 8,422,507, by contrast, teaches a method and an apparatus that allow the creation of dialing profiles with unique usernames and other data elements and associations for each subscriber. The dialing profiles include intercept information, including determination information for determining whether to intercept a communication involving the subscriber, destination information identifying a mediation device to which intercepted communications involving the subscriber are to be sent, a module configured to determine whether the determination information meets intercept criteria, a module configured to produce a separate routing message for routing communications involving the subscriber through specific pre-associated media relay to ensure that all VoIP communications traverse a point in the VoIP system that is under a provider's control and at which the communications can be copied in real-time to a mediation device that passes the intercepted communication to a law enforcement agency.<br>US 8,422,507 may further include provisions for maintaining direct-inward-dialing (DID) records associating PST telephone numbers with usernames of users subscribing to the IP network, and the provisions for finding a dialing |

| | | |
|---|---|---|
| | | profile associated with the subscriber whose communications are to be monitored may be operably configured to find a username in a DID record bearing a PSTN number associated with the subscriber whose communications are to be monitored and use the username to locate a dialing profile associated with the username.<br>By maintaining dialing profiles for respective subscribers and associating intercept information of the type described, with the dialing profiles of subscribers whose communications are to be monitored, the dialing profile can serve as the source of determination information for determining whether or not communications involving the subscriber will be monitored and for providing destination information for specifying where the copy of the communications is to be sent. Use of the dialing profile in this manner easily facilitates the dialing profile to be considered a respository for intercept information for a given subscriber and this repository can be addressed whether a call is being initiated or in progress, thereby simplifying control algorithms because they can cooperate with a common source and format of data in the dialing profile. |
| **US6553025** | **Priority Date Aug 18, 1999**<br><br>**Filing Date Aug 18, 1999**<br><br>**Pub Date Apr 22, 2003** | Multiple routing and automatic network detection of a monitored call from an intercepted targeted IP phone to multiple monitoring locations.<br>Teaches creating an IP phone monitor center (IPMC). It requires the intercept to occur as close to the target phone as possible, since there is no uniform way to identify the caller. It also lacks any system of classification |
| **US6560224** | **Priority Date Aug 18, 1999**<br><br>**Filing Date Aug 18, 1999**<br><br>**Pub Date May 6, 2003** | Automatic IP directory number masking and dynamic packet routing for IP phone surveillance. Requires an IP Address Mapping check Point without teaching a method to accurately intercept or classify calls. |
| **US6650641, US6985440** | **Priority Date Jul 2, 1999**<br><br>**Filing Date July 2, 1999**<br><br>**Pub Date Nov 18, 2003** | Network address translation using a forwarding agent. Somewhat more sophisticated than the two previous patents, it teaches the need for two-way communication and classification, but does not provide for the seamless intercept and data storage of US 8,422,507 |
| **US6993015, US20020018445** | **Priority Date Jun 6, 2001**<br><br>**Filing Date June 6, 2001**<br><br>**Pub Date Jan 31, 2006** | Apparatus for intercepting communication data in a packet network . While the communication terminal apparatus is executing voice communication with another communication terminal apparatus, the communication intercepting apparatus transmits a monitor request signal to the communication terminal apparatus which then instructs the terminal apparatus to store a copy of the transmission for later delivery to the intercepting apparatus. Lacks synchronous monitoring. |

| | | |
|---|---|---|
| **US7006508, US20020051518** | **Priority Date Apr 7, 2000**<br><br>**Filing Date Apr 5, 2001**<br><br>**Pub Date Feb 28, 2006** | Communication network with a collection gateway and method for providing surveillance services. Communication surveillance to be established by creating duplicate bearer packets of data packets carrying the communicated data between the parties.<br>Has very limited definition of data structures or apparatus. |
| **US7151772, CA2218218A1, EP0841832A2, EP0841832A3, US20030012196** | **Priority Date Nov 8, 1996**<br><br>**Filing Date Dec 22, 1999**<br><br>**Pub Date Dec 19, 2006** | Method for performing lawfully-authorized electronic surveillance. A call associated with a first party to be surveilled is verified, on a per-call basis. Packets associated with the call are multicast to a second party and to a surveillance receiver.<br>Uses a rudimentary approach to rebroadcast intercepted call. |
| **US20010052081** | **Priority Date Apr 7, 2000**<br><br>**Filing Date Apr 5, 2001**<br><br>**Pub Date Dec 13, 2001** | Communication network with a service agent element and method for providing surveillance services. A surveillance server responds to trigger information to establish communications surveillance.<br>Early discussion of SIP-like information. |
| **US20030179747, CA 2437275A1, DE60133316D1, DE60133316T2, EP1362456A2, EP1362456A4, EP1362456B1, WO2002082782A2, WO2002082782A3** | **Priority Date Oct 10, 2000**<br><br>**Filing Date Oct 9, 2001**<br><br>**Pub Date Sep 25, 2003** | Surveillance occurs by stripping the header from a packet, replicating the payload and adding a second header to replicated payload. Early method for rebroadcasting message. |
| **US20030219103, US7277528** | **Priority Date Feb 12, 2002**<br><br>**Filing Date Feb 12, 2003**<br><br>**Pub Date Nov 27, 2003** | Call-content determinative selection of interception access points in a soft switch controlled network. By selecting access points specific to the various components of call-content of a call, a monitoring agency is ensured of obtaining the call-content of each participant in telephone call. Primarily a soft-switched system for classification. |
| **US20040165709** | **Priority Date Feb 24, 2003**<br><br>**Filing Date Feb 24, 2003**<br><br>**Pub Date Aug 26, 2004** | Stealth interception of calls within a VoIP network. Soft switch based system. Soft Switch by provider that offers IP based telephony over a packet network. Packet Interceptors are deployed in a packet network to non-intrusively monitor the signaling and media packets. Focuses primarily on the nature of the interceptors. |
| **US20040203582, US 6963739** | **Priority Date Oct 21, 2002**<br><br>**Filing Date Oct 21, 2002**<br><br>**Pub Date Oct 14, 2004** | Method and apparatus for providing information intercept in an ad-hoc wireless network . A reporting mobile station operating in an ad-hoc wireless network, receives designation information identifying a target mobile station, and stores the designation information. The reporting mobile station then detects a communication from the target mobile station, and stores information about the communication. Rudimentary employment of a database. |

| | | |
|---|---|---|
| **US7738384, US7965645, US20090268615, US20100246589** | **Priority Date Mar 23, 2004**<br><br>**Filing Date Dec 1, 2004**<br><br>**Pub Date Jun 15, 2010** | Systems and methods for accessing voice transmissions. This extends US 20040202295 to include multiple telephony platforms and identification through IP address, a telephone number, or a uniform record locator. Does not have the dialing profile with the associated intercept information, destination information and relay. |
| **US8024785, CN101005503A, CN101005503B, US20070174469** | **Priority Date Jan 16, 2006**<br><br>**Filing Date Jan 5, 2007**<br><br>**Pub Date Sep 20, 2011** | Method and data processing system for intercepting communication between a client and a service Teaches a method that involves an identifying token that allows identification of a communication to be monitored. Lacks database dialing profile with the associated intercept information, destination information and relay. |
| **US8050273, US20070297376** | **Priority Date Jun 22, 2006**<br><br>**Filing Date Jun 22, 2006**<br><br>**Pub Date Nov 1, 2011** | Lawful interception in IP networks. Teaches a method based upon creating a virtual local network in which the object of the surveillance is included. |
| **US8427981, EP2127232A1, EP2127232A4, US20080205378, US20120195415, WO2008103652A1** | **Priority Date Feb 23, 2007**<br><br>**Filing Date Feb 23, 2007**<br><br>**Pub Date Apr 23, 2013** | System and method for recording and monitoring communications using a media server. Mimics phone tapping techniques. |
| **US8625578, US7797459, US20080056243** | **Priority Date Feb 11, 2003**<br><br>**Filing Date Oct 29, 2007**<br><br>**Pub Date Jan 7, 2014** | Access independent common architecture for real-time communications services for networking environments. Inter-architecture network utilizing a single protocol, a plurality of border elements in communication with the inter-architecture network and with an external network.<br>Lacks database dialing profile with the associated intercept information, destination information and relay. |

## F. ADDITIONAL SOURCES CONSIDERED


Baker, F., B. Foster, and C. Sharp. "Cisco Support for Lawful Intercept In IP Networks." Date Accessed 28 (2003).

Baker, Fred, Bill Foster, and Chip Sharp. "Cisco architecture for lawful intercept in IP networks." Internet Engineering Task Force, RFC 3924 (2004).

Thernelius F: "SIP, NAT, and Firewalls" Master's Thesis, Kungst Tekniska Hoegskolan, Department of Teleinformatics-Ericsson, May 2000, Describes a method for performing SIP signaling for a media stream is disclosed. The method includes receiving a SIP invite message of a first IP party, adapting at least one connection parameter in the SDP of the received SIP invite message, transmitting the adapted SIP invite message to a second IP party, receiving a SIP response message from the second IP party, adapting at least one connection parameter in the SDP of the received SIP response message, and transmitting the adapted SIP response message to the first IP party.

## G. ANALYSIS

Patent US 8,422,507 is not anticipated by the prior art reviewed which involved lawful intercepts of VoIP telephony. Nor has the prior art review suggested any likelihood that the innovations taught by US 8,422,507 would be considered “obvious” extensions of the prior art.

# US PATENT 8,537,805: EMERGENCY ASSISTANCE CALLING FOR VOIP COMMUNICATIONS

**Publication date Sep 17, 2013**
**Filing date Mar 20, 2008**
**Priority date Mar 26, 2007**

## A. SCOPE OF SEARCH

1. The prior art search comprises the period between the filing dates 1990 and 2008. The date 1990 began the search period because VoIP was developed in conjunction with the commercialization of internet in the 1990s. The end date 2008 was selected as the filing date cutoff because the priority date listed on US Patent 8,537,805 is March 26, 2007 and in order to predate the priority date and qualify for patent protection an applicant would need to file within a year of public disclosure under pre and post-Leahy Smith America Invents Act 35 USC 102(b).

2. The search included the search engines of the World Intellectual Property Organization (WIPO), Google Patent, Google Scholar and the United States Patent and Trademark Office. The search terms comprise, in various combinations, the following terms: VoIP, emergency calls, call back, and profiles. The prior art search further comprises a review of patent citations and references from pertinent patents, found in the word searches, to capture any additional patent publications not captured in the word searches including broadening reissue patents.

3. The search included all US, CA and European patents and applicable professional/technical articles identified by the Google Patent search strings which dealt with VoIP and other data communication intercepts.

## B. PATENT RELATED ART SUMMARY AND CLAIMS

### 1. Field of Invention

This invention relates to emergency calls to Emergency Response Centers (ERCs) involving callers using VoIP and more specifically the ability for ERCs to call back callers regardless of whether the callers have pre-associated direct inward dialing (DID) or not.

### 2. Description of Related Art

A feature common of PSTN telephony is that subscribers can make an emergency call using a universal number in order to reach ERCs (e.g. 911). Because of the architecture of PSTN telephony, a caller is routed to the nearest ERC with the caller's phone number and location in compliance with E911 standard. Said standard has been mandated for PSTN and cellular carriers in North America and other jurisdictions. The inclusion of the phone number and location enable ERC operators to direct safety personnel to the location of the caller and call back the caller if the telephony connection becomes disconnected. Given the non-hierarchical architecture of VoIP networks, the implementation of E911 in VoIP requires a means to route the number to nearest ERC, locate the caller, and provide a call back number that is not inherent in the VoIP technology.

## C. SUMMARY OF THE INVENTION

Some of the preferred embodiments of the invention comprise a process and an apparatus by which a caller can make an emergency call using VoIP. This apparatus and process involve receiving a routing request message including a caller identifier and a callee identifier. Said callee identifier matches an emergency call identifier pre-associated with the caller which sets an emergency call flag. Setting the emergency call flag may retrieve a dialing profile pre-associated with the caller, and this dialing profile may have a field with emergency call center identifier.

The process and apparatus determine whether the caller identifier is associated with a pre-associated direct inward dialing (DID) identifier or whether the caller needs to be associated with a temporary DID identifier. This may entail searching a DID database to determine whether a caller identifier is pre-associated with DID identifier or not. If the caller identifier is not pre-associated, the caller identifier may be associated with a temporary DID identifier from a pool of pre-determined DID identifiers. This temporary DID identifier may be canceled after a pre-defined time.

The process and apparatus further produce a routing message including the emergency response center identifier and the temporary or pre-associated DID identifier for receipt by a routing controller operable to cause a route to be established between the caller and the emergency response center. The routing message may include the DID identifier and the emergency response center identifier. The routing message may further specify the emergency call's maximum time which exceeds an average non-emergency call time.

## D. SUMMARY OF MAJOR CLAIMS

1. A process for handling emergency calls from a caller in a voice over IP system, the method comprising:
*receiving a routing request message including a caller identifier and a callee identifier*;
*retrieving a dialing profile associated with the caller, said dialing profile including an emergency call identifier field and an emergency response center identifier* field;
setting an emergency call flag active when the contents of said emergency call identifier field of said dialing profile match said callee identifier;

*determining whether said caller identifier is associated with a pre-associated direct inward dial (DID) identifier by searching a DID database for a DID record* associating a DID identifier with said caller and determining that said caller identifier is associated with a pre-associated DID identifier when said record associating a DID identifier with said caller is found and determining that said caller identifier is not associated with a pre-associated DID identifier *when a record associating a DID identifier with said caller is not found; producing a DID identifier for said caller* by:

*associating a temporary DID identifier with said caller identifier when said emergency call flag is active* and it is determined that said caller has no pre-associated DID identifier; and

*using said pre-associated DID identifier as said DID identifier for said caller when said emergency call flag is active* and it is determined that said caller has a pre-associated DID identifier;

*producing a routing message for receipt by a call controller operable to cause a route to be established between the caller and an emergency response center*, said routing message including:

*an emergency response center identifier from said emergency response center identifier field of said dialing profile associated with the caller, said emergency response center identifier being associated with said emergency response center, and said DID identifier.*

11. An apparatus for handling emergency calls from a caller in a voice over IP system, the apparatus comprising:
*means for receiving a routing request message including a caller identifier and a callee identifier;*

*means for retrieving a dialing profile associated with the caller, said dialing profile comprising an emergency call identifier field and an emergency response center identifier field;*
*means for setting an emergency call flag active when the contents of an emergency call identifier field of said dialing profile match said callee identifier;*
*means for determining whether said caller identifier is associated with a pre-associated direct inward dial (DID) identifier by searching a database for a DID record associating a DID identifier with said caller and for determining that said caller identifier is associated with a pre-associated DID identifier when said record associating a DID identifier with said caller is found and for determining that said caller identifier is not associated with a pre-associated DID identifier when a record associating a DID identifier with said caller is not found;*
*means for producing a DID identifier for said caller comprising:*
*means for associating a temporary DID identifier with said caller identifier when said emergency call flag is active and it is determined that said caller has no pre-associated DID identifier; and*
*means for causing said pre-associated DID identifier to be used as said DID identifier for said caller when said emergency call flag is active and it is determined that said caller has a pre-associated DID identifier;*
*means for producing a routing message for receipt by a call controller operable to cause a route to be established between the caller and an emergency response center, said routing message including:*
*an emergency response center identifier from said emergency response center identifier field of said dialing profile, said emergency response center identifier being associated with said emergency response center, and*
*said DID identifier.*

## E. SUMMARY OF MAJOR PRIOR ART

The graph below lists some of the more pertinent patents located during the prior art search and how said patents are distinguished from patent US8537805. The patents are organized first by their US patent number in ascending order followed by their concomitant publication numbers from other jurisdictions. In cases where there was not a patent granted, other US patent publication will follow the granted patents. Also, foreign patents, without US filings, are listed in alphabetical and numerical ascending order.

| Patent | Dates | Distinguished |
|---|---|---|
| **US6775534 B2, US20020002041, WO2001080587A1** | **Priority Date**<br><br>**Filing Date Apr 13, 2001**<br><br>**Pub Date Aug 10, 2004** | US6775534 B2 teaches a method involving network node for use in a packet data communications network which can detect an emergency call indication in a received session activation request and to set up a call even if normal call setup criteria are not met wherein said node is a SGSN element and wherein said SGSN element further adapted to create a packet session with a GGSN, including a further emergency call indication. This patent does not anticipate US8537805 because it does not teach a process or apparatus to call back once a telephonic connection is dropped when the caller calls using VoIP. Nor does it teach a dialing profile for the caller with different fields nor the other processes of assessing whether the caller has a pre-associated DID identifier or temporarily assigning a DID identifier and then where the caller does not have a pre-associated DID identifier. |
| **US7027564 B2, US7944909, US8437340, US20050063519, US20070253429, US20110176541** | **Priority Date**<br><br>**Filing Date Sep 22, 2003**<br><br>**Pub Date** | US7027564 B2 teaches a method and apparatus for supporting enhanced 911 (E911) emergency services for VoIP where a network is communicatively coupled to an E911 database management system, a network access device, and a VoIP telephone communicatively coupled to an input port of the network access device. The network access device is adapted to assign a physical location identifier to an input port, receive a unique device identifier from the VoIP telephone, and transmit the |

| | | |
|---|---|---|
| | **Apr 11, 2006** | location identifier and the unique device identifier to the E911 database management system. The E911 database management system is permitted to store the physical location identifier in association with the unique device identifier. This is not anticipatory to US8537805 because it does not teach a dialing profile for the caller with different fields nor the other processes of assessing whether the caller has a pre-associated DID identifier and then temporarily assigning a DID identifier where the caller does not have a pre-associated DID identifier. |
| **US7177399 B2, EP1721446A1, US20050190892, WO2005084002A1** | **Priority Date**<br><br>**Filing Date Jun 4, 2004**<br><br>**Pub Date Feb 13, 2007** | US7177399 B2 teaches a method to route and send location information about an emergency call made from VoIP communications to an emergency service network node. This is not anticipatory to US8537805 because it does not teach how to callback a VoIP caller from an ERC nor does it teach a dialing profile for the caller with different fields nor the other processes of assessing whether the caller has a pre-associated DID identifier and then temporarily assigning a DID identifier where the caller does not have a pre-associated DID identifier. |
| **US7440442 B2 EP1526697A2, EP1526697A3, US8027333, US8509225, US20050083911, US20090003535, US20110267986** | **Priority Date**<br><br>**Filing Date Oct 21, 2003**<br><br>**Pub Date Oct 21, 2008** | US7440442 B2 teaches a method of providing E911 services with VoIP that includes a location record that is associated with the phone's emergency response location ant transmitting the location record to monitoring station that ensures that the emergency call is received by a PSTN gateway and issuing an alarm if the message is not received by the PSTN gateway. This is not anticipatory to US8537805 because it does not teach how to callback a VoIP caller from an ERC nor does it teach a dialing profile for the caller with different fields nor the other processes of assessing whether the caller has a pre-associated DID identifier and then temporarily assigning a DID identifier where the caller does not have a pre-associated DID identifier. |
| **US7565131 B2, US20060205383** | **Priority Date**<br><br>**Filing Date Mar 8, 2005**<br><br>**Pub Date** | US7565131 B2 teaches a paging identifier for a wireless unit is obtained using a unique call back identifier for an emergency call placed by the wireless unit in response to an emergency call back. Then, an emergency intersystem page, which provides the paging identifier of the wireless unit and identifies the emergency intersystem page as requesting paging of the wireless unit for an emergency call back, is sent. Because this patent teaches a paging method and not a callback method and it does not teach the processes of assessing whether the caller has a pre-associated DID identifier and then temporarily assigning a DID identifier where the caller does not have a pre-associated DID identifier, it does not anticipate US8537805. |
| **US7573982 B2, US8462915, US20060078094, US20090296900, US20130272297** | **Filing Date Oct 12, 2004**<br><br>**Pub Date Aug 11, 2009** | US7573982 B2 teaches methods and systems operate to receive and send voice over internet protocol (VoIP) communications using a network, such as an IP network. The methods and systems also operate to receive and send emergency information over IP and other data networks. Based on certain criteria, the methods and systems determine whether to transfer a VoIP communication and/or emergency information to another entity associated with the IP network. This is not anticipatory to US8537805 because it does not teach a process or apparatus to call back once a telephonic connection is dropped when the caller calls using VoIP. Nor does it teach a dialing profile for the caller with different fields nor the other processes of assessing whether the caller has a pre-associated DID identifier or temporarily assigning a DID identifier and then where the caller does not have a pre-associated DID identifier. |

| | | |
|---|---|---|
| **US7639792 B2, US8189568, US20070115935, US20100177671, US20120314699** | **Priority Date**<br><br>**Filing Date**<br>**Nov 23, 2005**<br><br>**Pub Date**<br>**Dec 29, 2009** | US7639792 B2 teaches processing VoIP caller data in a server entailing private identifier (PRID) datum that includes the following data: a user equipment device identifier, user equipment device mobility, a public identifier (PUID) for the user equipment, and a network access device identifier (NID) for the call data. The public identifier and the location information is then sent to PSAP depending on the NID and the user equipment mobility with a callback number if the internet access port is a known location. This patent is not anticipatory to US8537805 because the PRID, taught in US7639792 B2, includes different fields then the fields taught as part of dialing profile for the caller in US8537805. Additionally this patent does not teach the processes of assessing whether the caller has a pre-associated DID identifier and then temporarily assigning a DID identifier where the caller does not have a pre-associated DID identifier. |
| **US7676215, CN1498029A, CN1498029B, DE60317751D1, DE60317751T2, EP1411743B1, , US20040203565** | **Priority Date**<br><br>**Filing Date**<br>**Oct 16, 2002**<br><br>**Pub Date**<br>**Mar 9, 2010** | US7676215 teaches assigning an emergency routing number to each switch in a wireless network. When a switch of the wireless network routes an emergency call to a Public Service Answering Point (PSAP), the switch sends the emergency routing number as the calling party number and provides the PSAP with the identifier of the mobile station. If the emergency call drops, the PSAP performs a call back using the emergency routing number as the called party number. The switch that routed the emergency call from the mobile station to the PSAP receives the call back. The PSAP also sends the identifier of the mobile station to the switch. When a switch receives its emergency routing number as the called party number, the switch recognizes an emergency call back situation and pages the mobile station identified by the mobile station identifier received in association with the emergency routing number. The mobile station is then reconnected with the PSAP. This is not anticipatory to US8537805 because it does not teach a dialing profile for the caller with different fields nor the other processes of assessing whether the caller has a pre-associated DID identifier and then temporarily assigning a DID identifier where the caller does not have a pre-associated DID identifier. |
| **US7702308 B2, CN1668137A, EP1575327A1, US20050202799** | **Priority Date**<br><br>**Filing Date**<br>**Mar 11, 2004**<br><br>**Pub date**<br>**Apr 20, 2010** | US7702308 B2 teaches a method which includes the step of receiving at least one tag identifier in response to the emergency call originating from the at least one wireless unit. Once the tag identifier is received, a wireless call back number corresponding with the at least one tag identifier may be transmitted. A public service answering point emergency call register ("PSAP-ECR") may receive the at least one tag identifier and transmits the wireless call back number over a D interface. This is not anticipatory to US8537805 because it does not teach a dialing profile for the caller with different fields nor the other processes of assessing whether the caller has a pre-associated DID identifier and then temporarily assigning a DID identifier where the caller does not have a pre-associated DID identifier. |
| **US7715821 B2, US20060189303** | **Priority Date**<br><br>**Filing Date**<br>**Feb 18, 2005**<br><br>**Pub Date**<br>**May 11, 2010** | US7715821 B2 teaches a method to update a unique callback number for a wireless device when a call is placed to ERC whereby the unique callback number replaces a first unique callback number which is associated with a mobile equipment identity. This is not anticipatory to US8537805 because it does not teach a dialing profile for the caller with different fields nor the other processes of assessing whether the caller has a pre-associated DID identifier and then temporarily assigning a DID identifier where the caller does not have a pre-associated DID identifier. |
| **US7764944 B2, DE602005016188** | **Priority Date** | US7764944 B2 teaches a method includes the step of receiving one or more routing tags associated with a wireless unit originating a "9-1-1" call |

| | | |
|---|---|---|
| **D1, EP1610583A1, EP1610583B1, US20050287979** | **Filing Date Jun 25, 2004**<br><br>**Pub Date Jul 27, 2010** | such as the following: a string of numbers corresponding with Emergency Service Routing Digits ("ESRD") and/or an Emergency Service Routing Key ("ESRK"). In addition to the routing tag, a mobile equipment identification number ("MEIN") and/or a paging identity ("PGID") may also be received by a database accessible by wireless network infrastructure elements, such as an MSC, as well as the emergency call center, including the local public service answering point, for example. In response to this receiving step, at least one unique identifier (e.g., unique call back number) may be generated. This unique identifier may be a dialable number to enable the emergency call center to call back the wireless unit originating the "9-1-1" call. Thereafter, the unique identifier may be transmitted back to the MSC, along with the emergency call center, for example. Consequently, an emergency call back may be launched by the emergency call center using the unique identifier to reach the MSC generally, and more particularly, the wireless unit originating the "9-1-1" call. This is not anticipatory to US8537805 because it does not teach a dialing profile for the caller with different fields nor the other processes of assessing whether the caller has a pre-associated DID identifier and then temporarily assigning a DID identifier where the caller does not have a pre-associated DID identifier. |
| **US7907551 B2, US20070092070, US20100272242, US20110013541** | **Priority Date**<br><br>**Filing Date Aug 15, 2006**<br><br>**Pub Date Mar 15, 2011** | US7907551 B2 teaches a method to establish an emergency conference call bridge between a caller on a VoIP device, the ERC based on the location of the VoIP device, and an emergency responder or three emergency responders. The conference call bridge lasts during the duration of the emergency call. This is not anticipatory to US8537805 because it does not teach a process or apparatus to call back once a telephonic connection is dropped when the caller calls using VoIP. Nor does it teach a dialing profile for the caller with different fields nor the other processes of assessing whether the caller has a pre-associated DID identifier or temporarily assigning a DID identifier and then where the caller does not have a pre-associated DID identifier. |
| **US8145182 B2, US20060030290** | **Priority Date**<br><br>**Filing Date May 9, 2005**<br><br>**Pub Date Mar 27, 2012** | US8145182 B2 teaches a device for identifying an emergency call in a wireless local area network includes an indicator to identify a call as an emergency call. The indicator can be a bit flag or an information element. The information element can include location information regarding the location of the station that placed the emergency call. This information can be used to locate the caller. This patent does not anticipate US8537805 because it does not teach a process or apparatus to call back once a telephonic connection is dropped when the caller calls using VoIP. Nor does it teach a dialing profile for the caller with different fields nor the other processes of assessing whether the caller has a pre-associated DID identifier or temporarily assigning a DID identifier and then where the caller does not have a pre-associated DID identifier. |
| **US8228897 B2, US8774171, US20070263609, US20120282881** | **Priority Date**<br><br>**Filing Date May 4, 2006**<br><br>**Pub Date Jul 24, 2012** | An SS7-based call protocol conversion gateway that translates between circuit-switched SS7 protocols and session initiation protocol (SIP) oriented protocol, allowing an E911 call initiated over a switched network to be routed by a VoIP network. The SS7-based call protocol conversion gateway provides a PSAP with MSAG quality (street address) information about a VoIP dual mode phone user without the need for a wireless carrier to invest in building out an entire VoIP core. Thus, wireless carriers may continue signaling the way they are today, i.e., using the J-STD-036 standard for CDMA and GSM in North America, yet see benefits of a VoIP network core, i.e., provision of MSAG quality location data to a |

| | | |
|---|---|---|
| | | PSAP. This patent does not anticipate US8537805 because it teaches a conversion process to continue to signal through CDMA and GSM, but leverage the benefits of VoIP. |
| **US8244204 B1** | **Priority Date**<br><br>**Filing Date**<br>**Dec 11, 2007**<br><br>**Pub Date**<br>**Aug 14, 2012** | US8244204 B1 teaches a method to suspend or modify incoming call restrictions for a subscriber station for some time period when it is detected that an emergency call was made by that subscriber station, so as to disable the restriction that would otherwise block completion of an incoming call to that station. This allows a call placed by emergency personnel in response to the emergency call from the subscriber station (i.e. when the emergency personnel calls back the user that is involved in the emergency) to bypass any restrictions setup by the subscriber or by the network that would otherwise block the callback and allows the emergency callback to potentially reach the caller. This is not anticipatory to US8537805 because it does not teach a process or apparatus to call back once a telephonic connection is dropped when the caller calls using VoIP. Nor does it teach a dialing profile for the caller with different fields nor the other processes of assessing whether the caller has a pre-associated DID identifier and then temporarily assigning a DID identifier where the caller does not have a pre-associated DID identifier. |
| **US8750290 B2, US20070121593** | **Priority Date**<br><br>**Filing Date**<br>**Oct 18, 2006**<br><br>**Pub Date**<br>**Jun 10, 2014** | US8750290 B2 teaches routing a call as either a VoIP call over the Internet or as a conventional call over the PSTN, verifying that at least one of the VoIP or PSTN telephony connections supports emergency service and routing calls over that connection or, if there is no connection supplying emergency service, restricting calling over the VoIP connection. This is not anticipatory to US8537805 because it does not teach a process or apparatus to call back once a telephonic connection is dropped when the caller calls using VoIP. Nor does it teach a dialing profile for the caller with different fields nor the other processes of assessing whether the caller has a pre-associated DID identifier and then temporarily assigning a DID identifier where the caller does not have a pre-associated DID identifier. |
| **US8768951 B2, US20070220038** | **Priority Date**<br><br>**Filing Date**<br>**Mar 20, 2006**<br><br>**Pub Date**<br>**Jul 1, 2014** | US8768951 B2 teaches a method of populating a location information database for use in providing a location-based service to a host device that is an endpoint of a logical connection between the host device and a network access server. The method comprises receiving from the host device over the logical connection a request for network access; assigning a logical identifier to the host device in response to the receiving; determining a physical location associated with the endpoint of the logical connection; creating an association between the logical identifier and the physical location; and storing the association in the location information database. This is not anticipatory to US8537805 because it does not teach a process or apparatus to call back once a telephonic connection is dropped when the caller calls using VoIP. Nor does it teach a dialing profile for the caller with different fields nor the other processes of assessing whether the caller has a pre-associated DID identifier and then temporarily assigning a DID identifier where the caller does not have a pre-associated DID identifier. |
| **US20060281437 A1** | **Priority Date**<br><br>**Filing Date**<br>**Jun 13, 2005** | US20060281437 A1 teaches a method by which to identify the geographic location of a VoIP telephone. The invention generally provides GPS-based geographic location information to the E911 emergency services network. This is not anticipatory to US8537805 because it does not teach a process or apparatus to call back once a |

| | | |
|---|---|---|
| | **Pub Date**<br>**Dec 14, 2006** | telephonic connection is dropped when the caller calls using VoIP. Nor does it teach a dialing profile for the caller with different fields nor the other processes of assessing whether the caller has a pre-associated DID identifier and then temporarily assigning a DID identifier where the caller does not have a pre-associated DID identifier. |
| **US20080013523 A1** | **Priority Date**<br><br>**Filing Date**<br>**Jul 14, 2006**<br><br>**Pub Date**<br>**Jan 17, 2008** | US20080013523 A1 teaches a method including an application server, the application server communicatively coupled to a service bureau configured to store location information, and communicatively coupled to a communication device over an Internet Protocol (IP) network, the communication device configured to transmit to the application server a call request message in order to establish a voice communication session, and to transmit voice information during the voice communication session; wherein the application server is configured to associate the communication device with a first telephone number and a second number, and the second number is associated with the stored location information. This is not anticipatory to US8537805 because it does not teach a process or apparatus to call back once a telephonic connection is dropped when the caller calls using VoIP. Nor does it teach a dialing profile for the caller with different fields nor the other processes of assessing whether the caller has a pre-associated DID identifier and then temporarily assigning a DID identifier where the caller does not have a pre-associated DID identifier. |
| **US20080188198 A1, EP1974304A2, EP1974304A4, US20090214000, WO2007087077A2, WO2007087077A3** | **Priority Date**<br><br>**Filing Date**<br>**Sep 4, 2007**<br><br>**Pub Date**<br>**Aug 7, 2008** | US20080188198 A1 teaches a system and method for providing medical, ocation information of a subscriber initiating an emergency call, directly to ublic Safety Answering Point (PSAP) at the time of the receipt of the all. Upon the initiation of an emergency call, the existing infrastructure f a communication service provider is able to access a central server e medical and contact information of a subscriber, and relay that directly to a call center to speed response time and response effectiveness. nticipatory to US8537805 because it does not teach a process or apparatus nce a telephonic connection is dropped when the caller calls using VoIP. each a dialing profile for the caller with different fields that is analogous to while it does have information about a subscriber. Further it does not teach cesses of assessing whether the caller has a pre-associated DID identifier porarily assigning a DID identifier where the caller does not have a pre-ID identifier. |
| **US20080310599 A1, CA2690236A1, CN101772929A, CN101772929B, EP2165489A1, EP2165489A4, WO2008151406A1, WO2008151406A8** | **Priority Date**<br><br>**Filing Date**<br>**Nov 15, 2007**<br><br>**Pub Date**<br>**Dec 18, 2008** | US20080310599 A1 teaches a method to make an emergency call back to user equipment and an access network which includes sending a message from a PSAP (Public Safety Answering Point) to the user equipment and the access network with the indication that the emergency call back is from the PSAP. This patent does not anticipate US8537805 because it does not teach a process or apparatus to call back once a telephonic connection is dropped when the caller calls using VoIP. Nor does it teach a dialing profile for the caller with different fields nor the other processes of assessing whether the caller has a pre-associated DID identifier and then temporarily assigning a DID identifier where the caller does not have a pre-associated DID identifier. |

| | | |
|---|---|---|
| **WO2007044454 A2** | **Priority Date**<br><br>**Filing Date**<br>**Oct 4, 2006**<br><br>**Pub Date**<br>**Nov 15, 2007** | WO2007044454 A2 was filed by the same original assignee as US7907551 B2 and teaches a similar method of connecting an emergency caller with an emergency response center through establishing an emergency conference call and adding third parties to the conference call such as police, firefighters and ambulance worker. This is not anticipatory to US8537805 because it does not teach a process or apparatus to call back once a telephonic connection is dropped when the caller calls using VoIP. Nor does it teach a dialing profile for the caller with different fields nor the other processes of assessing whether the caller has a pre-associated DID identifier and then temporarily assigning a DID identifier where the caller does not have a pre-associated DID identifier. |

## F. ADDITIONAL SOURCES CONSIDERED

Jajszczyk, Andrzej, and Robert Wójcik. "Emergency Calls in Flow-Aware Networks." IEEE Communications Letters 11.9 (2007): 753-755.

Kim, Jong Yul, Wonsang Song, and Henning Schulzrinne. "An enhanced VoIP emergency services prototype." ISCRAM, Newark, NJ (2006).

Mintz-Habib, Matthew, et al. "A VoIP emergency services architecture and prototype." Computer Communications and Networks, 2005. ICCCN 2005. Proceedings. 14th International Conference on. IEEE, 2005.

## G. ANALYSIS

Patent US8537805 is not anticipated by the prior art reviewed which involves emergency calls using VoIP telephony, nor is it an obvious extension of prior art. Some patent publications teach methods to locate callers using VoIP. Other patent publications teach methods by which ERCs may call back the callers after the telephonic connection is disconnected including providing callers with temporary DIDs. Patent US8537805 teaches a novel and nonobvious process and apparatus on how to comply with E911 standards with VoIP and more particularly to do so with a dialing profile associated with a caller occupied with different fields comprising an emergency call identifier field and an emergency response center identifier field, and the process of determining whether the caller identifier has a pre-associated DID or whether to associate a temporary DID identifier with said caller identifier.

# US PATENT 8,630,234: MOBILE TELEPHONY

**Priority date Jul 28, 2008**
**Filing date Jul 28, 2009**
**Publication date Jan 14, 2014**

## A. SCOPE OF SEARCH

1. The prior art search comprises the period between the filing dates 1990 and 2009. The date 1990 began the search period because VoIP was developed in conjunction with the commercialization of internet in the 1990s. The end date 2008 was selected as the filing date cutoff because the filing date listed on US Patent 8,630,234 is July, 28, 2009 and in order to predate the priority date and qualify for patent protection an applicant would need to file within a year of public disclosure under pre and post-Leahy Smith America Invents Act 35 USC 102(b).

2. The search included the search engines of the World Intellectual Property Organization (WIPO), Google Patent, Google Scholar and the United States Patent and Trademark Office. The search terms comprise, in various combinations, the following terms: mobile gateway, callee, callee identifier, access code, mobile telephone, and access server. The prior art search further comprises a review of patent citations and references from pertinent patents, found in the word searches, to capture any additional patent publications not captured in the word searches including broadening reissue patents.

3. The search included all US, CA and European patents and applicable professional/technical articles identified by the Google Patent search strings which dealt with VoIP and other data communication intercepts.

## B. PATENT RELATED ART SUMMARY AND CLAIMS

### 1. Field of Invention

This invention relates to mobile telephony and the method and apparatus to call a callee from a mobile device in a manner to avoid long distance charges by calling from a local call.

### 2. Description of Related Art

Mobile telephony service providers regularly charge additional fees for long distance calls and for calls made in another service provider's network. It is commonly known in the art that a caller could use a “calling card” or a comparable technology to call with a less expensive telephone number, and thus avoid the long distance call fees. However, calling cards often require a caller to perform a series of complicated steps.

## C. SUMMARY OF THE INVENTION

The invention comprises a process and an apparatus by which a caller using a mobile telephone can make a long distance call using *callee and location identifiers associated with the callee. The call is made by transmitting from a mobile telephone an access code request message. The access code request message comprises the callee identifier and a location identifier and the location of the mobile telephone. This location identifier may be an IP address of the mobile telephone, a wireless voice signal station, or a user configured location associated with the mobile telephone. This transmission may occur through non-voice network.*

*An access server receives said access code message and identifies an access code from a pool. Each of these access codes identify a respective telephone number or Internet Protocol (IP) network address that enables a local call to be made to the callee.*

*The caller receives an access code reply message from the access server which may involve a non-voice network. This reply includes an access code different from the callee identifier and associated with said location identifier and/or associated with a location pre-associated with the mobile telephone. The access code may be temporarily associated with the callee identifier. The caller can then initiate a call to the callee with the mobile telephone using the access code. The access code expires after a period of time*.

## D. SUMMARY OF MAJOR CLAIMS

1. A method of roaming with a mobile telephone, the method comprising:
*receiving, from a user of the mobile telephone, a callee identifier associated with the callee*;
*transmitting an access code request message to an access server to seek an access code from a pool of access codes wherein each access code in said pool of access codes identifies a respective telephone number or Internet Protocol (IP) network* address that enables a local call to be made to call the callee identified by the callee identifier, said access code request message including said callee identifier and a location identifier separate and distinctive from said callee identifier, said location identifier identifying a location of the mobile telephone;
*receiving an access code reply message from the access server in response to said access code request message*, said access code reply message including an access code different from said callee identifier and associated with said location identifier and/or associated with a location pre-associated with the mobile telephone and wherein said access code expires after a period of time; and*initiating a call with the mobile telephone using said access code to identify the callee.*
11. A mobile telephone apparatus comprising:
*means for receiving, from a user of the mobile telephone, a callee identifier associated with the callee;*
*transmitting means for transmitting an access code request message to an access server to seek an access code from a pool of access codes wherein each access code in said pool of access codes identifies a respective telephone number or Internet Protocol (IP) network address that enables a local call to be made to call the callee identified by the callee identifier, said access code request message including said callee identifier and a location identifier separate and distinctive from said callee identifier, said location identifier identifying a location of the mobile telephone;*
*means for receiving an access code reply message from the access server in response to said access code request message, said access code reply message including an access code different from said callee identifier and associated with said location identifier and/or associated with a location pre-associated with the mobile telephone and wherein said access code expires after a period of time; and*
*means for initiating a call using said access code to identify the callee*.

## E. SUMMARY OF MAJOR PRIOR ART

The graph below lists some of the more pertinent patents located during the prior art search and describes how said patents are distinguished from patent US8630234. The patents are organized first by their US patent number in ascending order followed by their publication numbers from other jurisdictions. In cases where there was not a patent granted, other US patent publications will follow the granted patents. Also, foreign patents, without US filings, are listed in alphabetical and numerical ascending order.

| Patent | Dates | Distinguished |
|---|---|---|
| **US5325421 A** | **Priority Date** | US5325421 A teaches a method including a caller to place a telephone call by merely uttering a label identifying a desired called destination and to |

| | | |
|---|---|---|
| | **Aug 24, 1992**<br><br>**Filing Date Aug 24, 1992**<br><br>**Pub Date Jun 28, 1994** | charge the telephone call to a particular billing account by merely uttering a label identifying that account. Alternatively, the caller may place the call by dialing or uttering the telephone number of the called destination or by entering a speed dial code associated with that telephone number. This patent does not anticipate US8630234 because it does not teach a process or apparatus to make a long distance call with a mobile device and more specifically does not anticipate US8630234 because it does not teach an access code request message that comprises the callee identifier and a location identifier associated with the location of the mobile telephone. Nor does it teach transmitting this request through non-voice network. Nor does it teach a pool of access codes affiliated with different localities in order to make local calls to callees. Nor does it teach an access code reply message comprised with an temporary access code different from the callee identifier and associated a location identifier. |
| **US7929955 B1, US20110201321** | **Priority Date Apr 28, 2006**<br><br>**Filing Date Apr 28, 2006**<br><br>**Pub Date Apr 19, 2011** | US7929955 B1 teaches a method comprising a receiver component that receives a call request, the call request originates from a mobile handset that is associated with multiple numbers. An analysis component analyzes the call request and selects a caller line identification (CLI) from amongst a plurality of CLIs to provide to a called party that is a subject of the call request. For instance, the mobile handset and/or a network server can comprise the receiver component and/or the analysis component. While this patent teaches selecting a CLI from plurality of CLIs much as US8630234 teaches selecting an access code from a pool of access code, this patent is not anticipatory to US8630234 because it does not teach an access code request message that comprises the callee identifier and a location identifier associated with the location of the mobile telephone. Nor does it teach transmitting this request through non-voice network. Nor does it teach a pool of access codes affiliated with different localities in order to make local calls to callees. Nor does it teach an access code reply message comprised with a temporary access code different from the callee identifier and associated a location identifier. |
| **US8605869 B1** | **Priority Date Aug 8, 2008**<br><br>**Filing Date Aug 8, 2008**<br><br>**Pub Date Dec 10, 2013** | US8605869 B1 teaches a method comprising a caller may specify a callee's telephone number and be connected directly to a carrier provided voice mail facility associated with the identified the telephone number, even though the callee's carrier may not be the same as the caller's carrier. In the disclosed technique, a telephony server places a “Send a call” request to a server which then sends a signaling call that busies out the channel associated with the callee. The telephony server places a second call (the actual voice message) upon confirmation that the signaling call has been initiated, forcing the second call to the carrier's voice mail facility associated with the callee, since the first signaling call busied the first channel. This is not anticipatory to US8630234 because it does not teach how to send a long distance call using a mobile device with the following steps: transmitting an access code request message that comprises the callee identifier and a location identifier associated with the location of the mobile telephone; selecting an access code |

| | | |
|---|---|---|
| | | from a pool of access codes affiliated with different localities in order to make local calls to callees; accessing code reply message comprised with an temporary access code different from the callee identifier and associated a location identifier. |
| **US20080167039 A1 US20080166999, US20080167019, US20080167020, US20080188227, WO2008085614A2, WO2008085614A3, WO2008085614A8, WO2008086350A2, WO2008086350A3** | **Priority Date Jan 8, 2007**<br><br>**Filing Date Nov 30, 2007**<br><br>**Pub Date Jul 10, 2008** | US20080167039 A1 teaches a method of providing a local access number to a subscriber may include receiving subscriber locale information indicating a location of a subscriber, mapping the subscriber locale information to one or more local access numbers, identifying, from the one or more local access numbers, a local access number corresponding to the subscriber locale information and transmitting the identified local access number to the subscriber's mobile device. Although this patent teaches providing local access numbers to subscribes using mobile devices through receiving the subscribers locale information and mapping it to access numbers and transmitting the local access number to the mobile device, this is not anticipatory to US8630234 because it does not teach all the steps by which US8630234 performs this service which comprise namely some of the following: transmitting an access code request message, potentially through a non-voice network, that comprises the callee identifier and a location identifier associated with the location of the mobile telephone; and accessing code reply message comprised with an temporary access code different from the callee identifier and the associated location identifier. |
| **US20080187122 A1, WO2006078175A2, WO2006078175A3** | **Priority Date Jan 20, 2005**<br><br>**Filing Date Jan 17, 2006**<br><br>**Pub Date Aug 7, 2008** | US20080187122 A1 teaches how to provide a globally useful telephone number a URI character string which may be similar to an email address may be provided to a mobile phone server or an internet server for translation to the actual phone number and establishment of a call to that number. This patent is not anticipatory to US8630234 because it does not teach an access code request message that comprises the callee identifier and a location identifier associated with the location of the mobile telephone. Nor does it teach transmitting this request through non-voice network. Nor does it teach a pool of access codes affiliated with different localities in order to make local calls to callees. Nor does it teach an access code reply message comprised with an temporary access code different from the callee identifier and associated a location identifier. |
| **CA2299037 A1, EP1032224A2, EP1032224A3** | **Priority Date Feb 22, 1999**<br><br>**Filing Date Feb 21, 2000**<br><br>**Pub Date Aug 22, 2000** | CA2299037 A1 teaches a method allowing a user to set up landline calls using a mobile telephone. A user initiates outgoing calls by inputting into the mobile phone the phone numbers of a remote phone of a called party and a local landline phone convenient for use by the user. A message containing these phone numbers is sent by the mobile telephone to a remote telephone call origination platform, which establishes a bridging connection between the remote phone and the local phone. An incoming call is received by signaling the user of an incoming call on the mobile phone. The user inputs the number of a convenient landline phone into the mobile phone, which in turn signals the remote telephone call origination platform to forward the incoming call to the designated landline phone. This is not anticipatory to US8630234 because it teaches sending two telephone numbers through a data network to a RTCO platform in order to make the communication; whereas US8630234 teaches a method and apparatus by which an access server selects a access code that is within the same network or locality of the callee identifier in order to make the call. Nor does it teach an access code |

| | | |
|---|---|---|
| | | request message that comprises the callee identifier and a location identifier associated with the location of the mobile telephone. Nor does it teach transmitting this request through non-voice network. Nor does it teach an access code reply message comprised with a temporary access code different from the callee identifier and associated a location identifier. |

## F. ANALYSIS

Patent US8630234 teaches a novel and nonobvious process and apparatus to avoid long distance surcharges by transmitting an access request to access server with novel steps to receive an access code to make a call to a callee from a local number. Patent US Patent 8,630,234 is not anticipated by any prior art, nor is there any evidence that it would be considered an obvious extension of prior art.

# US PATENT 8,675,566: UNINTERRUPTED TRANSMISSION OF INTERNET PROTOCOL TRANSMISSIONS DURING ENDPOINT CHANGES

**Priority Date: September 17, 2009**
**Filing Date: September 17, 2009**
**Publication Date: March 24, 2011**

## A. SCOPE OF SEARCH

1. The prior art search comprises the period between the filing dates 1990 and 2010. The date 1990 began the search period because VoIP was developed in conjunction with the commercialization of internet in the 1990s. The end date 2010 was selected as the filing date cutoff because the filing date listed on US Patent 8,675,566 is September 17, 2009, and in order to predate the priority date and qualify for patent protection an applicant would need to file within a year of public disclosure under pre and post-Leahy Smith America Invents Act 35 USC 102(b).

2. The search included the search engines of the World Intellectual Property Organization (WIPO), Google Patent, Google Scholar and the United States Patent and Trademark Office. The search terms comprise, in various combinations, the following terms: uninterrupted transmission of internet protocol (IP), real time transport protocol (RTP), endpoint changes. The prior art search further comprises a review of patent citations and references from pertinent patents, found in the word searches, to capture any additional patent publications not captured in the word searches including broadening reissue patents.

3. The search included all US, CA and European patents and applicable professional/technical articles identified by the Google Patent search strings which dealt with VoIP, uninterrupted transmission of IP and endpoint changes.

## B. FIELD OF THE INVENTION AND RELATED ART

### 1. Field of Invention

This invention relates to internet protocol (IP) transmissions and, more particularly, to uninterrupted transmission of IP transmissions containing real time transport protocol (RTP) data during endpoint changes.

### 2. Description of Related Art

Internet Protocol (IP) transmission systems are known to use media relays to relay IP transmissions from one endpoint to another. In a telephone system, the media relay relays IP transmissions between a caller and a callee. An IP session is established by a call controller, which interacts with the media relay, the caller and the callee to convey to each of these entities the IP addresses and ports to which they should send IP transmissions and from which they should expect IP transmissions. The media relay is configured to accept packets conveyed by IP transmissions from specified caller and callee IP addresses and ports. In some systems, such as mobile telephone systems, a mobile telephone may be in communication with a first base station while in a certain geographical area and there may be a handoff of the call to another base station when the mobile telephone is moved to a different geographical location. Communications between the base stations and the mobile telephones are conducted on a Global System from Mobile Communication (GSM) network or other cellular network, for example, and the base stations convert messages to and from the GSM

network and the IP network and thus, the base stations establish the caller and callee IP addresses and ports. Each base station will have a unique IP address and UDP port number that it associates or assigns to the mobile telephone with which it has established communication in the conventional manner over the cellular network. Thus, a conventional media relay will reject IP streams from the new base station after handoff of the call because such streams are seen as being transmitted by an unauthorized source. This generally prevents voice over IP telephone calls from being made through systems that employ media relays without further call handling.

The Session Initiation Protocol (SIP) RFC 3261 provided by the Internet Engineering Task Force (IETF) specifies a mechanism for an endpoint to notify another endpoint if its IP address changes. This mechanism employs a signaling message that conveys an identification of new media properties for the endpoint whose IP address has changed. The use of SIP messages for this purpose, however, adds extra overhead and delays to the call as signaling messages must be routed through the call controller and the call controller must communicate with the media relay and endpoints to re-configure the media relay to accept IP transmissions from the endpoint having the new IP address and to cause IP transmission to be relayed thereto each time a handoff occurs.

## C. SUMMARY OF THE INVENTION

A method apparatus and computer readable medium for *facilitating uninterrupted transmission of internet protocol (IP) transmissions containing real time transport protocol (RTP) data during endpoint changes. When an IP transmission is received at the caller RTP port or the callee RTP port, a call record having a caller RTP port identifier or a callee RTP port identifier matching a destination port identifier in the IP transmission is located and when the destination port identifier in the IP transmission matches the caller RTP port identifier of the record, a source IP address identifier and source port identifier from the IP transmission are set as the caller IP address identifier and caller port identifier respectively of the record when the caller IP address identifier and caller port identifier do not match the source IP address identifier and source port identifier respectively and a received SSRC identifier in the IP transmission matches the caller SSRC identifier.* When the destination port identifier in the IP transmission matches the callee RTP port identifier of the record, the source IP address identifier and source port identifier from the IP transmission are set as the callee IP address identifier and callee port identifier respectively of the record when the callee IP address identifier and callee port identifier do not match the source IP address identifier and source port identifier respectively and the received SSRC identifier in the IP transmission matches the callee SSRC identifier.

## D. SUMMARY OF MAJOR CLAIMS

1. *A method for facilitating uninterrupted transmission of internet protocol (IP) transmissions containing real time transport protocol (RTP) data during endpoint changes, the method comprising:*

*maintaining records, each record associating session information, caller information and callee information for a respective IP communication session;*

*said session information including caller and callee RTP port identifiers identifying a caller RTP port and a callee RTP port respectively of a media relay through which IP transmissions of the IP communication session are relayed;*

*said caller information including a caller IP address identifier and a caller port identifier to which IP transmissions received at said callee RTP port are transmitted from the media relay, and a caller synchronization source (SSRC) identifier; and*

*said callee information including a callee IP address identifier and a callee port identifier to which IP transmissions received at said caller RTP port are transmitted from the media relay, and a callee SSRC identifier; and*

*when an IP transmission is received at said caller RTP port or said callee RTP port:*

*locating one of said records having said caller RTP port identifier or said callee RTP port identifier matching a destination port identifier in said IP transmission; and*

*a) when said one of said records is located and when said destination port identifier in said IP transmission matches the caller RTP port identifier of said one of said records,*

*setting a source IP address identifier and source port identifier from said IP transmission as the caller IP address identifier and caller port identifier respectively of said one of said records when:*

*said caller IP address identifier and caller port identifier do not match said source IP address identifier and source port identifier respectively; and*

*a received SSRC identifier in said IP transmission matches said caller SSRC identifier; and*

*b) when said one of said records is located and when said destination port identifier in said IP transmission matches the callee RTP port identifier of said one of said records,*

*setting said source IP address identifier and source port identifier from said IP transmission as the callee IP address identifier and callee port identifier respectively of said one of said records when:*

*said callee IP address identifier and callee port identifier do not match said source IP address identifier and source port identifier respectively; and*

*said received SSRC identifier in said IP transmission matches said callee SSRC identifier.*

5. *A media relay apparatus for facilitating uninterrupted transmission of internet protocol (IP) transmissions containing real time transport protocol (RTP) data during endpoint changes, the apparatus comprising:*

*a processor;*

*input/output interfaces in communication with the processor to provide for connection to an IP network;*

*non-transitory program memory and storage memory, said program memory encoded with computer executable codes for directing the processor to:*

*provide a logical input/output interface interacting with said input/output interfaces to define caller and callee RTP ports;*

*maintain call records in said storage memory, each said call record having fields associating session information, caller information and callee information for a respective IP communication session;*

*said fields associating session information including caller and callee RTP port identifier fields identifying a caller RTP port and a callee RTP port respectively, through which IP transmissions of the IP communication session are relayed;*

*said caller information including a caller IP address identifier field and a caller port identifier field to which IP transmissions received at the callee RTP port are to be transmitted, and a caller synchronization source (SSRC) identifier field; and*

*said callee information including a callee IP address identifier field and a callee port identifier field to which IP transmissions received at said caller RTP port are to be transmitted, and a callee SSRC identifier field; and*

*to locate one of said records having said caller RTP port identifier field contents or said callee RTP port identifier field contents matching a destination port identifier in said IP transmission when an IP transmission is received at a caller RTP port or a callee RTP port;*

*when said one of said records is located and when said destination port identifier in said IP transmission matches the contents of the caller RTP port identifier field of said one of said records,*

*storing a source IP address identifier and source port identifier from said IP transmission in the caller IP address identifier field and caller port identifier field respectively when:*

*the contents of said caller IP address field and caller port identifier field do not match said source IP address identifier and source port identifier respectively; and*

*a received SSRC identifier in said IP transmission matches the contents of said caller SSRC identifier field; and*

*when said one of said records is located and when said destination port identifier in said IP transmission matches the contents of the callee RTP port identifier field of said one of said records,*

*storing said source IP address identifier and source port identifier from said IP transmission in the callee IP address identifier field and callee port identifier field respectively when:*

*said contents of said callee IP address identifier field and said callee port identifier field do not match said source IP address identifier and source port identifier respectively; and*

*said received SSRC identifier in said IP transmission matches the contents of said callee SSRC identifier field.*

9. *A media relay apparatus for facilitating uninterrupted transmission of Internet protocol (IP) transmissions containing real time transport protocol (RTP) data during endpoint changes, the apparatus comprising:*

*a processor;*

*physical connection means for providing physical connections between the processor and an IP network;*

*means for interacting with said physical connection means and said processor for providing a logical input/output interface defining caller and callee RTP ports;*

*means for maintaining call records in memory, each of said call records having means for associating session information, caller information and callee information for a respective IP communication session including:*

*means for storing caller and callee RTP port identifiers identifying a caller RTP port and a callee RTP port respectively through which IP transmissions of the IP communication session are relayed;*

*means for storing a caller IP address identifier and a caller port identifier to which IP transmissions received at said callee RTP port are to be transmitted from the media relay apparatus;*

*means for storing a caller synchronization source (SSRC) identifier;*

*means for storing a callee IP address identifier and a callee port identifier identifying the callee RTP port to which IP transmissions received at said caller RTP port are to be transmitted from the media relay apparatus; and*

*means for storing a callee SSRC identifier; and*

*means for locating one of said records having a caller RTP port identifier or a callee RTP port identifier matching a destination port identifier in an IP transmission when the IP transmission is received at a caller RTP port or a callee RTP port;*

*means for determining whether said destination port identifier in said IP transmission matches the caller RTP port identifier of said one of said records;*

*means for setting the caller IP address identifier and caller port identifier as the source IP address identifier and source port identifier respectively from said IP transmission when:*

*said caller IP address identifier and caller port identifier do not match said source IP address identifier and source port identifier respectively; and*

*a received SSRC identifier in said IP transmission matches said caller SSRC identifier; and*

*means for determining whether said destination port identifier in said IP transmission matches the callee RTP port identifier of said one of said records, and*

*means for setting the callee IP address identifier and callee port identifier as the source IP address identifier and source port identifier respectively from said IP transmission when:*

*said callee IP address identifier and said callee port identifier do not match said source IP address identifier and source port identifier respectively; and*

*said received SSRC identifier in said IP transmission matches said callee SSRC identifier.*

13. *A non-transitory computer readable medium encoded with computer executable codes for directing a processor of a media relay to facilitate uninterrupted transmission of internet protocol (IP) transmissions containing real time transport protocol (RTP) data during endpoint changes, the codes comprising computer executable codes for directing the processor to:*

*maintain records, each record associating session information, caller information and callee information for a respective IP communication session;*

*said session information including a caller RTP port identifier and a callee RTP port identifier identifying caller and callee RTP ports respectively of the media relay through which IP transmissions of the IP communication session are relayed;*

*said caller information including a caller IP address identifier and a caller port identifier to which IP transmissions received at said callee RTP port are transmitted from the media relay, and a caller synchronization source (SSRC) identifier; and*

*said callee information including a callee IP address identifier and a callee port identifier to which IP transmissions received at said caller RTP port are transmitted from the media relay, and a callee SSRC identifier; and*

*when an IP transmission is received at said caller RTP port or said callee RTP port:*

*locate one of said records having said caller RTP port identifier or said callee RTP port identifier matching a destination port identifier in said IP transmission;*

*when said one of said records is located and when said destination port identifier in said IP transmission matches the caller RTP port identifier of said one of said records,*

*set a source IP address identifier and source port identifier from said IP transmission as the caller IP address identifier and caller port identifier respectively of said one of said records when:*

*said caller IP address identifier and caller port identifier do not match said source IP address identifier and source port identifier respectively; and*

*a received SSRC identifier in said IP transmission matches said caller SSRC identifier; and*

*when said one of said records is located and when said destination port identifier in said IP transmission matches the callee RTP port identifier of said one of said records,*

*set said source IP address identifier and source port identifier from said IP transmission as the callee IP address identifier and callee port identifier respectively of said one of said records when:*

*said callee IP address identifier and callee port identifier do not match said source IP address identifier and source port identifier respectively; and*

*said received SSRC identifier in said IP transmission matches said callee SSRC identifier.*

*16. The computer readable medium of claim 13 further comprising computer executable codes for directing the processor to:*

*if the IP transmission was received at the caller RTP port, cause the media relay to forward the IP transmission to the callee at the callee IP address and callee port identified by the callee IP address identifier and callee port identifier respectively and identify the source of said IP transmission forwarded to the callee with the callee RTP port identifier; and*

*if the IP transmission was received at the callee RTP port, cause the media relay to forward the IP transmission to the caller at the caller IP address and caller port identified by the caller IP address identifier and caller port identifier respectively and identify the source of said IP transmission forwarded to the caller with the caller RTP port identifier.*

## E. SUMMARY OF MAJOR PRIOR ART

The graph below lists some of the more pertinent patents located during the prior art search and describes how said patents are distinguished from patent US 8675566 B2. The patents are organized first by their US patent number in ascending order followed by their publication numbers from other jurisdictions. In cases where there was not a patent granted, other US patent publications will follow the granted patents. Also, foreign patents, without US filings, are listed in alphabetical and numerical ascending order.

| Patent | Dates | Distinguished |
|---|---|---|
| **US7979529,**<br>**US20040181599,**<br><br>**CN1274114C,**<br><br>**CN1498482A,**<br><br>**DE50211291D1,**<br>**EP1244250A1,**<br>**EP1371173A1,**<br>**EP1371173B1,**<br>**WO2002082728A1** | **Priority Date**<br><br>**Mar 21, 2001**<br><br>**Filing Date**<br><br>**Mar 7, 2002**<br><br>**Pub Date** | US20040181599 teaches a method and telecommunications system for monitoring a data flow in a data network. When monitoring, the data flow between the telecommunications is rerouted from the access server via a monitoring server which makes a copy of the data flow (DAT) and transmits it to an evaluation unit.<br><br>In contrast, although US8675566 has a classification function, it uses that function in order to facilitate routing to occur in a data system based upon the stored caller synchronization source (SSRC) identifier and real time transport protocol (RTP) data to ensure uninterrupted transmission of internet protocol (IP) transmissions containing real time transport protocol (RTP) data during endpoint changes. |

| | | |
|---|---|---|
| | **Sep 16, 2004** | |
| **US7436835,**<br><br>**US20040240439** | **Priority Date May 30, 2003**<br><br>**Filing Date May 30, 2003**<br><br>**Pub Date Dec 2, 2004** | US20040240439 teaches a method of intercepting call content in a packet-based Internet Protocol (IP) network. The method includes targeting bearer packets containing the call content via a Softswitch controlling the redirection of the targeted bearer packets through a specified Intercept Router using alias IP addresses for the targeted bearer packets.<br><br>In contrast, US8675566's classification function facilitates routing to occur in a data system based upon the stored caller synchronization source (SSRC) identifier and real time transport protocol (RTP) data to ensure uninterrupted transmission of internet protocol (IP) transmissions containing real time transport protocol (RTP) data during endpoint changes. |
| **US8306063,**<br><br>**US20080056302** | **Priority date**<br><br>**Aug 29, 2006**<br><br>**Filing date Aug 29, 2006**<br><br>**Pub date Mar 6, 2008** | US20080056302 teaches a system and method for identifying UDP packets on an IP network as candidates for characterization as packets of a RTP stream. UDP packets are identified at a point on the IP network, and for each identified UDP packet 1) it is determined if a version number in a RTP header field in the payload of the UDP packet equals a predetermined value, 2) determined if a packet length associated with the UDP packet is within a predetermined range, 3) determined if a payload type RTP header field within the payload of the UDP packet is within a predetermined range. If all the criteria are satisfied, then the identified UDP packet is characterized as a candidate RTP packet. It is then determined if the candidate RTP packet belongs to a previously detected RTP stream, or to a newly encountered RTP stream. A stream data store is then updated using the information in the RTP header of the candidate RTP packet.<br><br>In contrast, US8675566 utilizes the real time transport protocol (RTP) data to facilitate routing to occur in a data system based upon the stored caller synchronization source (SSRC) identifier to to ensure uninterrupted transmission of internet protocol (IP) transmissions containing real time transport protocol (RTP) data during endpoint changes. |
| **US20090135735, WO2009070202A1** | **Priority date Nov 27, 2007**<br><br>**Filing date Apr 8, 2008**<br><br>**Pub date May 28, 2009** | US20090135735 teaches a method and apparatus to track changes to RTP packets of an RTP session caused by media processing, modify RTP packet information of the RTP packets based on the tracked changes, correct RTP control protocol (RTCP) packets corresponding to the RTP session based on the tracked changes, the corrected RTCP packets being a measure of the end-to-end reception quality of the RTP session, and report the end-to-end reception quality of the RTP session by forwarding the corrected RTCP packets.<br><br>In contrast, US8675566 utilizes the real time transport protocol (RTP) data to facilitate routing to occur in a data system based upon the stored caller synchronization source (SSRC) identifier to to ensure uninterrupted transmission of internet protocol (IP) transmissions containing real time transport protocol (RTP) data during endpoint changes. |
| **US20090141883, EP2215755A1, EP2215755A4,** | **Priority date Nov 30, 2007** | US20090141883 comprises a computer-readable medium for performing IP-based call intercept includes instructions for receiving call initiation data, a first IP packet from the first communications device, and a second |

| | | |
|---|---|---|
| **US8514841, WO2009070278A1** | **Filing date Nov 30, 2007**<br><br>**Pub date Jun 4, 2009** | IP packet from a second communications device, generating copies of the first IP packet and the second IP packet, and transmitting one of the first IP packets to the second communications device according to the call initiation data, another of the first IP packets to a surveilling agency computer system without encoding a decoding the IP packet, one of the second IP packets to the first communications device according to the call initiation data, and another of the second IP packets to the surveilling agency computer system without encoding or decoding the IP packet.<br><br>In contrast, US8675566 utilizes the real time transport protocol (RTP) data to facilitate routing to occur in a data system based upon the stored caller synchronization source (SSRC) identifier to to ensure uninterrupted transmission of internet protocol (IP) transmissions containing real time transport protocol (RTP) data during endpoint changes. |
| **US20100128729, US7680114,**<br><br>**US7894441, US20070047548** | **Priority date Aug 26, 2005**<br><br>**Filing date Jan 27, 2010**<br><br>**Pub date May 27, 2010** | US20100128729 comprises a packet forwarding device which minimizes degradation in packet forwarding performance at the time of execution of filtering there is provided a technique in which a destination decision processing unit of a destination decision and filtering unit decides whether to execute filtering on the basis of at least one of an input interface, an input port number, an output interface, and an output port number of an input packet and a plurality of pieces of information constituting the header of the packet. A filtering unit executes filtering only for a packet for which execution of filtering is decided. The packet forwarding device with the destination decision and filtering unit need not execute filtering for all packets and can minimize degradation in packet forwarding performance caused by filtering.<br><br>In contrast, US8675566 utilizes the real time transport protocol (RTP) data to facilitate routing to occur in a data system based upon the stored caller synchronization source (SSRC) identifier to to ensure uninterrupted transmission of internet protocol (IP) transmissions containing real time transport protocol (RTP) data during endpoint changes. |
| **US20120099599, CN102484656A, EP2449749A1, EP2449749B1,**<br><br>**US8611354, WO2011000405A1** | **Priority date Jun 29, 2009**<br><br>**Filing date Jun 29, 2009**<br><br>**Pub date Apr 26, 2012** | US20120099599 comprises an apparatus for relaying packets between a first host and a second host and methods for sending packets between a first and second host are provided. The apparatus includes a memory for registering for the first host the following information: a relayed address of the first host, an address of the second host, and an outbound higher layer identifier and/or an inbound higher layer identifier. The apparatus further includes an outbound packet inspector for inspecting packets received from the first host and addressed to an address of the apparatus to determine whether they contain a registered outbound higher layer identifier and, if so, for forwarding the packets to the address of the second host and/or an inbound packet inspector for inspecting packets received from the second host and addressed to the relayed address to determine whether they contain a registered inbound higher layer identifier and, if so, for forwarding the packets to the address of the first host.<br><br>In contrast, US8675566's classification function facilitates routing to occur in a data system based upon the stored caller synchronization source (SSRC) identifier and real time transport protocol (RTP) data to ensure uninterrupted transmission of internet protocol (IP) transmissions containing real time transport protocol (RTP) data during endpoint |

| | | |
|---|---|---|
| | | changes. |
| **US20120227101, US8166533,**<br><br>**US8607323, US20040034793, US20140101749** | **Apr 11, 2012**<br><br>**Publication date Sep 6, 2012**<br><br>**Filing date Apr 11, 2012**<br><br>**Priority date Aug 17, 2002** | US20120227101 teaches a method for transmitting information packets across network firewalls. A trusted entity is provisioned with an address designation for a pinhole through the firewall during setup of a communication session between two communication devices. This pinhole address is used throughout the communication session between the two communication devices to transmit information packets onto and out of the communication network.<br><br>Information packets addressed to the communication device inside the firewall are received by the trusted entity, which replaces address header information in the information packet with the address for the pinhole. The information packet is routed to the pinhole where it passes onto the network for routing to the communication device inside the firewall. Information packets transmitted from the network are also routed to the trusted entity for routing toward the communication device outside the firewall.<br><br>In contrast, US8675566 utilizes the real time transport protocol (RTP) data to facilitate routing to occur in a data system based upon the stored caller synchronization source (SSRC) identifier to to ensure uninterrupted transmission of internet protocol (IP) transmissions containing real time transport protocol (RTP) data during endpoint changes. |
| **US20130114589, US8363647, US8804705, US20020141352** | **Priority date Apr 3, 2001**<br><br>**Filing date Dec 28, 2012**<br><br>**Publication date May 9, 2013** | US20130114589 discloses a system and method for IP telephony. The system includes an IP telephone (IPT) and a Service Gateway (SG). The SG receives an identifier, e.g., a vendor class identifier, included in a DHCP discover message from the IP telephone and determines if the identifier is valid. If so, the SG issues a DHCP offer comprising DHCP lease information to the IP telephone, including a range of port numbers assigned to the IP telephone based on the identifier, where the range of port numbers comprises ports which are not reserved for use by other IP protocols. The DHCP lease information includes information indicating operational software for the IP telephone which the IP telephone executes to enable IP communications. The SG mediates IP communications between the IP telephone and an IP device, where the IP telephone uses at least a subset of the range of port numbers to send or receive IP communications.<br><br>In contrast, US8675566 utilizes the real time transport protocol (RTP) data to facilitate routing to occur in a data system based upon the stored caller synchronization source (SSRC) identifier to to ensure uninterrupted transmission of internet protocol (IP) transmissions containing real time transport protocol (RTP) data during endpoint changes. |

## F. ADDITIONAL SOURCES CONSIDERED

Kornfeld, Michael, and Gunther May. "DVB-H and IP datacast—broadcast to handheld devices." Broadcasting, IEEE Transactions on 53.1 (2007): 161-170.

Ma, Qinghuai, et al. "Realizing MPEG4 video transmission based on mobile station over GPRS." Wireless Communications, Networking and Mobile Computing, 2005. Proceedings. 2005 International Conference on. Vol. 2. IEEE, 2005.

Munir, Muhammad Farukh, Abdelbasset Trad, and Thierry Turletti. "Study of an Adaptive Scheme for Voice Transmission on IP in a Wireless Networking Environment 802.11 e." ESSI (Ecole Supérieure En Sciences Informatiques, Université De Nice, France (2005).

## G. ANALYSIS

Patent 8,675,566 is not anticipated by any prior art, nor is there any evidence that it would be considered an obvious extension of prior art.

# US 8774378: ALLOCATING CHARGES FOR COMMUNICATION SERVICES

**Priority Date Nov 2, 2006**
**Filing date Sep 17, 2013**
**Publication date Jul 8, 2014**

## A. SCOPE OF SEARCH

1. The prior art search comprises the period between the filing dates 1990 and 2014. The date 1990 began the search period because VoIP was developed in conjunction with the commercialization of internet in the 1990s. The end date 2014 was selected as the filing date cutoff because the filing date listed on US Patent 8774378 is September 17, 2013, and in order to predate the priority date and qualify for patent protection an applicant would need to file within a year of public disclosure under pre and post-Leahy Smith America Invents Act 35 USC 102(b).

2. The search included the search engines of the World Intellectual Property Organization (WIPO), Google Patent, Google Scholar and the United States Patent and Trademark Office. The search terms comprise, in various combinations, the following terms: routing, billing, rating, VoIP, subscriber profiles. The prior art search further comprises a review of patent citations and references from pertinent patents, found in the word searches, to capture any additional patent publications not captured in the word searches including broadening reissue patents.

3. The Search included all US, CA and European patents and applicable professional/technical articles identified by the search strings.

## B. FIELD OF INVENTION AND RELATED ART

### 1. Field of Invention

This invention relates to voice over IP communications and methods and apparatus for allocating charges. It is a continuation of US Patent 8,542,815.

### 2. Description of Related Art

In recent years, Internet protocol (IP) telephones have been seen as an increasingly attractive alternative to traditional public switched telephone network (PSTN) phones. The rapid growth of “smart” cellular phones that allow the user access to the Internet from their cellular device has pushed traditional technologies to provide increased interoperability of IP phones within an existing topography of cellular telephony and traditional switched circuit networks (SCN). While some interoperable services have been provided, the differences between IP networks which are based upon “packets” of data that “hop” between multiple networks to complete communications and PSTN networks that communicate with “end to end” communications have hampered true interoperability.

One of the advantages of PSTN’s point to point communication is that it allows complex local network nodes that contain extensive information about a local calling service area including user authentication and call routing. The PSTN network typically aggregates all information and traffic into a single location or node, processes it locally and then passes it on to other network nodes, as necessary, by maintaining route tables at the node. This information provides much easier routing, rating and billing of PSTN-based calls.

## C. SUMMARY OF THE INVENTION

The invention includes a process and an implementing apparatus for operating a call routing controller to facilitate communication and allocation of charges in that communication, between callers and callees in a system in which there a many nodes with which callers and callees are associated.

The invention includes processes and implementing apparatuses for *operating a call routing controller to facilitate communication between callers and callees in a system in which there a many nodes with which callers and callees are associated.*

*As a call is placed by a subscriber, the routing controller provides a caller identifier and a callee identifier. The process also includes call classification criteria associated with the caller identifier that identifies the call as a public network call or a private network call.* The call classification criteria may involve searching a database to locate a record identifying calling attributes associated with a caller that are identified by the caller identifier.

*Each database record is a dialing profile with a username associated with the caller, a domain associated with the caller, and at least one calling attribute.* The attribute might be an international dialing digit, IDD, a national dialing digit, an area code or other pertinent information. For example, the attribute might be a direct in dial (DID) record that associates the caller with a public telephone number.

*The process and associated apparatus may identify that the information in the dialing profile may need to be reformatted, if the digit count is inappropriate for the call, based upon comparing the number called with the public telephone number of the caller.* For example, if a dialing profile included an IDD or NDD that was not needed because the destination of the call was domestic, the process would reformat the information so that it would allow the call to be completed. If, in another case, there was a missing IDD or NDD, the process would add the appropriate code based upon the area code.

*If the call is identified as a private network call, a routing message is created that identifies an address, on the private network, associated with the callee.* Analogously, *if the call is classified as a public network call, a routing message is created that identifies a gateway to the public network*. When the node associated with the caller is not the same as the node associated with the callee, the process involves producing a routing message including the caller identifier, the reformatted callee identifier and an identification of a private network node associated with the callee and communicating the routing message to a call controller.

If the node associated with the caller is the same as the node associated with the callee, the process determines whether to connect the call, forward the call to another party, or block the call and direct the caller to a voicemail server associated with the callee. Producing the routing message may involve producing a routing message having an identification of at least one of the callee identifier, an identification of a party to whom the call should be forwarded and an identification of a voicemail server associated with the callee.

*Producing a routing message for a call to a public network will identify a gateway to the public network and may involve searching a database of route records associating route identifiers with dialing codes or supplier records to find a route record having a dialing code having a number pattern matching at least a portion of the reformatted callee identifier.* The data structure includes master list records with fields for associating a dialing code with respective master list identifiers and supplier list records linked to master list records by the master list identifiers. The supplier list records are database fields for associating with a communications services supplier, a supplier id, a master list id, a route identifier and a billing rate code, so that communications services suppliers are associated with dialing codes, in order that dialing codes can be used to locate suppliers capable of providing a communications link associated with a given dialing code. The routing message is used by a call routing controller as a part of the communications system.

*The process and associated apparatus may involve loading a routing message buffer with the reformatted callee identifier and an identification of specific routes associated respective ones of the supplier records associated with the route record and loading the routing message buffer with a time value and a timeout value.*

*The process can include various methods for rating, or establishing the cost to be associated with call. These methods include the ability to calculate time, distance and type of communication in order to assign a cost. Calculating the cost per unit cost may involve a database with a markup type indicator, a markup value and a billing pattern and setting a reseller rate equal to the sum of the markup value and the buffer rate.*

## D. SUMMARY OF MAJOR CLAIMS

1. A *computer implemented process for attributing charges for communications services,* the *process* comprising:

*causing a processor to determine a first chargeable time in response to a communication session time and a pre-defined billing pattern;*

*causing the processor to determine a user cost value in response to the first chargeable time and a free time value associated with a user of the communications services;*

*causing the processor to change an account balance associated with the user in response to the user cost value;*

*causing the processor to change an account balance associated with a reseller of the communications services in response to a reseller cost per unit time and the communication session time; and*

*causing the processor to change an account balance associated with an operator of the communications services in response to an operator cost per unit time and the communication session time.*

2. The *process* of claim 1, wherein *determining the first chargeable time comprises*:

*causing the processor to locate at least one of:*

*an override record specifying a billing pattern associated with a route associated with the communication session;*

*a reseller record associated with a reseller of the communications session, the reseller record specifying a billing pattern associated with the reseller for the communication session; and*

*a default record specifying a billing pattern; and*

*causing the processor to set as the pre-defined billing pattern the billing pattern of the located record, wherein the billing pattern of the located record comprises a first billing interval and a second billing interval.*

15. *An apparatus for attributing charges for communications services,* the apparatus comprising:

*a processor operably configured to receive signals representing a communication session time, a pre-defined billing pattern, a free time value associated with a user of the communications services, a reseller cost per unit time; and an operator cost per unit time;*

*a non-transitory computer readable medium encoded with codes for directing the processor to:*

*receive the signals representing the communication session time, the pre-defined billing pattern, the free time value associated with a user of the communications services, the reseller cost per unit time, and the operator cost per unit time;*

*determine a first chargeable time in response to the communication session time and the pre-defined billing pattern;*

*determine a user cost value in response to the first chargeable time and the free time value;*

*cause an account balance associated with the user to be changed in response to the user cost value;*

*cause an account balance associated with a reseller of the communications services in response to the reseller cost per unit time and the communication session time; and*

*cause an account balance associated with an operator of the communications services to be changed in response to the operator cost per unit time and the communication session time.*

16. *The apparatus of claim 15, wherein the codes include codes for directing the processor to determine the first chargeable time by:*

*causing the processor to locate at least one of:*

*an override record specifying a billing pattern associated with a route associated with the communication session;*

*a reseller record associated with a reseller of the communications session, the reseller record specifying a billing pattern associated with the reseller for the communication session; and*

*a default record specifying a billing pattern; and*

*causing the processor to set as the pre-defined billing pattern the billing pattern of the located record, wherein the billing pattern of the located record comprises a first billing interval and a second billing interval.*

## E. SUMMARY OF MAJOR PRIOR ART

The graph below lists some of the more pertinent patents located during the prior art search and describes how said patents are distinguished from patent US 8774378. The patents are organized first by their US patent number in ascending order followed by their publication numbers from other jurisdictions. In cases where there was not a patent granted, other US patent publications will follow the granted patents. Also, foreign patents, without US filings, are listed in alphabetical and numerical ascending order.

| Patent Number | Dates | Distinguished |
|---|---|---|
| US 7400881 | Priority Date 12/23/2004<br><br>Filing Date<br><br>Publication Date 7/15/2008 | The invention discloses a method for routing calls and messages in a communication system. A mobile station registers to a call control node using a logical name. The logical name is mapped in a directory to an international mobile subscriber identity. The call control node performs a location update to a home location register using the international mobile subscriber identity. The mobile station is reached using a called party number. As a terminating call or message is received to a core network, a roaming number is allocated for the mobile station, and the call or message is routed to the call control entity currently serving the mobile station.<br><br>Although the international mobile subscriber identity bears some limited resemblance to the caller dialing profiles of the instant patent, The patent involves allocating a roaming local number to allow for local rates to be charged to the subscriber. None of the routing, rating or billing systems anticipate the instant patent. |
| US 7664495 | Priority Date<br><br>4/21/2005 | Systems and methods provide a single E.164 number for voice and data call redirection and telephony services such as caller identification, regardless of in which type of network a dual mode mobile device operates. When the dual mode device registers and is active in a GSM network, temporary routing and status updates are triggered and resultant information is maintained in both |

| | | |
|---|---|---|
| | Filing Date<br><br>Pub Date<br><br>2/16/2010 | networks. A mobile terminated call is routed through an enterprise WLAN with call control within the enterprise being handled by SIP or H.323 signaling, and the call is redirected to the mobile device in the GSM network, where call control is assumed by the SS7 network. Services are provided using the protocols native to the active network, and the single E.164 is used consistently along with or lieu of the temporary routing information for subscriber identity specific functions, such as caller identification and voice mail. The use of a single E.164 number for a dual mode mobile device has some similarity to the assignment of a single number in the instant patent, but the nature of the database and the interoperability of the system are significantly different that the methods and functions disclosed in the instant patent. |
| US7068668 | Priority Date<br>1/7/2000<br><br>Filing Date<br><br>Pub Date<br><br>6/27/2006 | A real-time interface between the public switched telephone network (PSTN) and an Internet Protocol (IP) network provides voice to data and data to voice conversion between the PSTN and the IP network in a seamless process. The interface, a central communication network, performs Class 5 switching between the PSTN and the IP network, besides providing enhanced services. Receiving a call, the central communication network simultaneously routes the call to a plurality of preprogrammed numbers on the PSTN and on the IP network. This patent does provide a real-time interface between a PSTN and an IP system, but the role of stored number is to facilitate group broadcast through a centralized server. There is no equivalent to the dialing profile of the instant patent nor to the purposes and effects of the interoperable systems it provides. |
| US8204044 | Priority Date<br>12/30/2004<br><br>Filing Date<br><br>Pub Date<br>6/19/2012 | The method includes receiving a request from a first mobile device to invite a second mobile device to participate in a VoIP session. The second device may be identified in the request by a network identifier. The network identifier is related to a mobile IP (MIP) address of the second device and a second IP address. An invitation is sent to the MIP address of the second device which may include a MIP address of the first device and a first IP address. A response to the invitation may be received from the second device. The response may be modified to include a first IP header that includes the MIP address of the second device and a second IP header to include the second IP address. The modified response is forwarded to the first device. After receipt of the modified response, the first device is configured to establish an IP connection for VoIP communication with the second device.<br><br>This patent uses a “network identifier” related to the mobile IP address which appears to serve a function similar to one of the functions of the dialing profile of the instant patent. However, the network identifier is, at most, a single element of the database that comprises the dialing profile. Functionally this patent suggests only a small part of the routing and none of the rating and billing disclosed in the instant patent. |
| US 7995589 | Priority Date<br>3/13/2000<br><br>Filing Date<br><br>Pub Date | A method and apparatus of communicating over a data network includes providing a user interface in a control system for call control and to display information relating to a call session. The control system communicates one or more control messages (e.g., Session Initiation Protocol or SIP messages) over the data network to establish a call session with a remote device in response to receipt of a request through the user interface. One or more commands are transmitted to a voice device associated with the control system to establish the call session between the voice device and the remote device over the data network. A Real-Time Protocol (RTP) link may be established between the |

| | | |
|---|---|---|
| | 8/9/2011 | voice device and the remote device. |
| US 7120682 | 3/8/2001<br><br>10/10/2006 | Virtual private networks for voice over networks applications<br><br>Focused on private network Applications. |
| US 7212522 | 7/8/2004<br>5/1/2007 | Communicating voice over a packet-switching network<br><br>Basic VoIP communication |
| US 20020116464 | 3/27/2001<br>8/22/2002 | Electronic communications system and method |
| US 20040022237 | 2/12/2003<br>2/5/2004 | Voice over data telecommunications network architecture<br><br>Uses soft switching to implement interoperability |

## F. ADDITIONAL SOURCES CONSIDERED

Bhushan, Bharat, et al. "Federated accounting: Service charging and billing in a business-to-business environment." Integrated Network Management Proceedings, 2001 IEEE/IFIP International Symposium on. IEEE, 2001.

Lee, Kyu Ouk, Seong Youn Kim, and Kwon Chul Park. "VoIP interoperation with KT-NGN." Advanced Communication Technology, 2004. The 6th International Conference on. Vol. 1. IEEE, 2004.

Yu, SuJung, et al. "Service-oriented issues: Mobility, security, charging and billing management in mobile next generation networks." Broadband Convergence Networks, 2006. BcN 2006. The 1st International Workshop on. IEEE, 2006.

## G. ANALYSIS

Patent US 8774378 is not anticipated by the prior art reviewed which involved routing, billing and rating of VoIP telephony and interoperability of VoIP, cellular telephony and PSTN by routing that involves a database that associates the subscriber with a DID number, a local relay and other routing information. Some patent publications teach methods to associate IP telephony with a DID number. Other publications teach methods to route cellular communication using stored routing information. None include the sophisticated database and associated routing, billing and rating structures taught by US 8774378. Nor has the prior art review suggested any likelihood that the innovations taught by US 8774378 would be considered “obvious” extensions of the prior art.

## 5. Apple Inc. / J Lasker E-Mail dated September 24 2014

At 12:56 PM 9/24/2014, you wrote:

Tom,

We received the materials and are currently reviewing them. We will endeavor to get you a response regarding Voip-Pal's patents mentioned in the materials by the end of next week, after we have completed our initial assessment.

As I have informed you previously, if you are asking Apple to consider your company's ideas or to collaborate in some other way, we cannot do so. Apple has a stated policy of not accepting, reviewing, or considering outside submissions of product ideas for any purpose. We have adopted this policy due in part to the large volume of mail received and also to avoid potential misunderstandings or disputes when Apple's products or marketing strategies might seem similar to ideas submitted to Apple. The policy can be viewed at http://www.apple.com/legal/policies/ideas.html.

Jeff

Jeffrey V. Lasker
Legal Counsel, IP Transactions
< Apple Inc.
408-862-1377

## 6. Apple Inc. / J Lasker E-Mail October 8 2014 w Attachment 6A

Tom,

Please see the attached letter.

Regards,
Jeff

Jeffrey V. Lasker
Legal Counsel, IP Transactions
< Apple Inc.
408-862-1377

**6A. Attachment to E-Mail dated October 8 2014**

October 8, 2014 Via Email

Thomas E. Sawyer, Ph.D.
Chairman and CEO
Voip-Pal.com, Inc.
P.O. Box 900788
Sandy, Utah 84090
Email: tesawyer@tesawyer.com

Re: Voip-Pal.com, Inc.

Dear Tom,

I write to you in response to your letter dated September 15, 2014 and your email dated September 26, 2014 regarding U.S. Patent Nos. 8,542,815 ('815 patent), 8,422,507 ('507 patent), 8,537,805 ('805 patent), 8,630,234 ('234 patent), 8,774,378 ('378 patent), and 8,675,566 ('566 patent). I am also in receipt of your email dated September 30, 2014.

As my colleague Denise Kerstein previously informed you, Apple is not currently interested in acquiring Voip-Pal's patents. Additionally, as I have explained to you previously, we have reviewed the patents and do not believe they cover any products or services offered by Apple. I asked that you provide detailed claim charts explaining the basis for your assertion if you disagree with our conclusion. However, the materials you provided do not include any charts or other explanation regarding the elements of the patent claims. Your materials include only vague reference that the patents are allegedly "in use," "may be used," "will be used," or "not used, but will be beneficial to use."

In any event, we have carefully reviewed the materials you provided, Voip-Pal's patents, and their prosecution histories, and concluded that Voip-Pal's patents do not cover any products or services offered by Apple. Accordingly, we do not believe any license to Voip-Pal's patents is necessary. We address each of the patents below.

**Apple Inc.**
Jeffrey V. Lasker
1 Infinite Loop, MS 169-3IPL
Cupertino, CA 95014
(408) 862-1377
jlasker @apple.com

I. Patents

A. '815 patent

Voip-Pal contends that '815 patent is applicable to iMessage because the patent is directed to routing "a communication in private (Internet) and public (Legacy PSTN) domains." However, Voip-Pal's broad brush application of the '815 patent runs contrary to the claims, the specification, and the file history. As an initial matter, all of the claims of the '815 patent are directed to routing telephone calls. In contrast, iMessage does not route telephone calls – it is an instant messaging service.

Additionally, the claims call for routing calls between a private or public network. Voip-Pal appears to state that, in the context of iMessage, the "private" network is the Internet. But the Internet, by its own term, is not a "private" network. To the contrary, it is a global system of interconnected computer networks. Indeed, the '815 patent specification itself distinguishes between a private network and the Internet, stating that:

> "[i]t should be noted that throughout the description of the embodiments of this invention, the IP/UDP addresses of all elements such as the caller and callee telephones, call controller, media relay, and many others, will be assumed to be valid IP/UDP addresses directly accessible via **the Internet or a private IP network**, for example, depending on the specific implementation of the system." *See, e.g.*, '815 patent at 13:30-36.

Thus, Voip-Pal's apparent contention that a "private network" is the "Internet" is contrary to the patent specification itself.

Additionally, Voip-Pal's assertion that the '815 patent is applicable to iMessage is contrary to the file history. In distinguishing prior art, the applicant argued that the prior art taught searching a database using information associated with the "callee" rather than the "caller" to determine where to route the call (public or private), whereas the claims call for using the "caller" information to determine where to route the call. Voip-Pal's allegations against iMessage fail to articulate how iMessage uses the "caller" information (in contrast to the "callee" information distinguished during prior art) for routing.

The above noted deficiencies are just some of the non-limiting examples that illustrate why the '815 patent is not applicable to iMessage, or other Apple products and services, such as FaceTime.

B. '566 patent

Voip-Pal also contends that '566 patent is applicable to Apple's WiFi calling technology. We do not see any correlation between claims of the '566 patent and WiFi calling. The claims of the '566 patent include numerous limitations, yet Voip-Pal does not

explain how any of the limitations are purportedly satisfied by WiFi calling. For example, each claim of the '566 patent, among other things, requires a record containing a caller and callee RTP port identifier that identifies a port on each side of a media relay server through which the RTP transmissions pass. We do not see how this basic limitation is satisfied by Apple's WiFi calling feature. Similarly, we do not see how the other numerous limitations are satisfied by the WiFi calling technology. Therefore, we do not believe the '566 patent is relevant to Apple's products or services.

C. '507, '805, '378, and '234 patents

Regarding the '507, '805, '378, and '234 patents, Voip-Pal does not allege that any particular claim of these patents is applicable to any of the Apple products. Instead, the materials include only a table that makes only vague reference that the patents "may be used," "will be used," or "not used, but will be beneficial to use" in Apple's technology. Based on our initial review and the information you provided, we do not see how these patents are relevant to any Apple technology.

II. Conclusion

For at least these reasons, we do not believe Apple needs a license to Voip-Pal's patents. If you disagree with our assessment, please provide me with a detailed explanation and support for your positions, including detailed claim charts explaining the basis for your assertion.

Regards,

Jeffrey V. Lasker
Legal Counsel, IP Transactions

**7. E-Mail to Apple Inc. / J Lasker October 15 2014 w Attachments 7A, 7B and 7C**

T.E. Sawyer <tesawyer@tesawyer.com> 10/15/14

to jlasker

Jeffrey,

This response to your letter of October 8, 2014 to me has been carefully prepared to address your comments in sufficient detail to confirm areas of overlap between Apple's functionality and the patented technology of Voip-Pal. In my opinion there is little or no doubt of this conflict after this draft document. I have made very few edits in order to preserve the technical team's commentary. While the WiFi is addressed, I am prepared to drop this issue from consideration. We are sincerely seeking a non litigious solution that will prove to be mutually beneficial to both Apple and Voip-Pal. Thank you for Apple's further analysis and consideration.

Dr. Thomas E. Sawyer

## 7A. Attachment to E-Mail dated October 15 2014 - Detailed Rebuttal

October 8, 2014 Via Email

Thomas E. Sawyer, Ph.D.
Chairman and CEO
Voip-Pal.com, Inc.
P.O. Box 900788
Sandy, Utah 84090
Email: tesawyer@tesawyer.com

Re: Voip-Pal.com, Inc.

Dear Tom,

I write to you in response to your letter dated September 15, 2014 and your email dated September 26, 2014 regarding U.S. Patent Nos. 8,542,815 ('815 patent), 8,422,507 ('507 patent), 8,537,805 ('805 patent), 8,630,234 ('234 patent), 8,774,378 ('378 patent), and 8,675,566 ('566 patent). I am also in receipt of your email dated September 30, 2014.

As my colleague Denise Kerstein previously informed you, Apple is not currently interested in acquiring Voip-Pal's patents. Additionally, as I have explained to you previously, we have reviewed the patents and do not believe they cover any products or services offered by Apple. I asked that you provide detailed claim charts explaining the basis for your assertion if you disagree with our conclusion. However, the materials you provided do not include any charts or other explanation regarding the elements of the patent claims. Your materials include only vague reference that the patents are allegedly "in use," "may be used," "will be used," or "not used, but will be beneficial to use."

In any event, we have carefully reviewed the materials you provided, Voip-Pal's patents, and their prosecution histories, and concluded that Voip-Pal's patents do not cover any products or services offered by Apple. Accordingly, we do not believe any license to Voip-Pal's patents is necessary. We address each of the patents below.

I. Patents

A. '815 patent

Voip-Pal contends that '815 patent is applicable to iMessage because the patent is directed to routing "a communication in private (Internet) and public (Legacy PSTN) domains." However, Voip-Pal's broad brush application of the '815 patent runs contrary to the claims, the specification, and the file history. As an initial matter, all of the claims of the '815 patent are directed to routing telephone calls. In contrast, iMessage does not route telephone calls - it is an instant messaging service.

'815 patent discloses (claim 1, col 36, lines 14-17):

1. A process for operating a call routing controller to facilitate communication between callers and callees in a system comprising a plurality of nodes with which callers and callees are associated, the process comprising:

"communication" is not only voice calls, but includes video and data (means messaging similar to iMessges), which is emphasized further:

col. 1, lines 18-21

large organization. These IP telephones have installed "voice-over-IP" (VoIP) software enabling them to make and receive voice calls and send and receive information in data and video formats.

Additionally, the claims call for routing calls between a private or public network. Voip-Pal appears to state that, in the context of iMessage, the "private" network is the Internet. But the Internet, by its own term, is not a "private" network. To the contrary, it is a global system of interconnected computer networks. Indeed, the '815 patent specification itself distinguishes between a private network and the Internet, stating that:

In the scope of '815 patent, Internet incorporates the private networks of large organizations, to which subscribers are associated, for public access to mobile, WiFi and other operators. Subscribers acquire the Internet via **public** accesses then connect to a **private** network to get the service. For example, two Apple subscribers, connect to Internet via public accesses of Verizon Wireless and T-Mobile, to then connect to Apple private network of supporting servers, to enable iMessage to each other.

> "[i]t should be noted that throughout the description of the embodiments of this invention, the IP/UDP addresses of all elements such as the caller and callee telephones, call controller, media relay, and many others, will be assumed to be valid IP/UDP addresses directly accessible via **the Internet or a private IP network,** for example, depending on the specific implementation of the system." *See, e.g.,* '815 patent at 13:30-36.

Thus, Voip-Pal's apparent contention that a "private network" is the "Internet" is contrary to the patent specification itself.

Private network definition is well supported by industry standard specifications, in particular:
col. 1, lines 17-18

2. Description of Related Art

Internet protocol (IP) telephones are typically personal computer (PC) based telephones connected within an IP network, such as the public Internet or a private network of a large organization. These IP telephones have installed "voice-

col. 13, lines 30-35

It should be noted that throughout the description of the embodiments of this invention, the IP/UDP addresses of all elements such as the caller and callee telephones, call controller, media relay, and any others, will be assumed to be valid IP/UDP addresses directly accessible via the Internet or a private IP network, for example, depending on the specific implementation of the system. As such, it will be assumed, for

Additionally, Voip-Pal's assertion that the '815 patent is applicable to iMessage is contrary to the file history. In distinguishing prior art, the applicant argued that the prior art taught searching a database using information associated with the "callee" rather than the "caller" to determine where to route the call (public or private), whereas the claims call for using the "caller" information to determine where to route the call. Voip-Pal's allegations against iMessage fail to articulate how iMessage uses the "caller" information (in contrast to the "callee" information distinguished during prior art) for routing.

In prior art, well before 2007, the decision on how to route the call was very basic, and based **only** on "callee" number – because legacy PSTN was the only network at that time. We developed and patented the system based on the then PSTN network. When multiple private networks became available such as Apple servers network and Vonage network, it became necessary to make routing decisions that consider **both** "caller" and "callee" identifiers.
It is not correct to say that '815 only "claims call for using the "caller" information to determine where to route the call." Instead, both "caller" and "callee" identifiers are used. They relate not only to numbers as identifiers, it is far more encompassing and can take the form of email or SIP addresses like user5@node3.north.europe.company.com. Using both identifiers is well summarized in specification:

col. 14, lines 25-34

iMessage application on the iPhone obviously knows own phone ('caller') number and Apple ID. At call initiation, it obtains from user the destination ('callee') identifier, for simplicity, in form of legacy PSTN number. To learn the destination Apple ID, if any, and whether 'callee' is available in Apple network or not, that number is communicated to Apple servers. Either servers make routing decision and send message to destination, or they just provide 'callee' Apple ID information back to enable the iPhone to make a routing decision and send message, or more likely a complex combination of both – it doesn't matter in view of '815 patent. '815 patent includes Method and Process (claims 1 54) and Apparatus (claims 28 74 93) independent claims, which can be implemented on server or on iPhone.

If ‘callee’ subscriber is available in the Apple network, he/she is in private network, same as ‘caller’ subscriber. So message is sent as a **blue** iMessage **private-to-private**. Either they are on the same geographical node, or on different nodes, it doesn’t matter. Whether iMessage is sent via server, or directly from ‘caller’ iPhone to ‘callee’ iPhone (since information is provided by servers), it doesn’t matter. Previously called numbers and Apple IDs can be cached on the iPhone. Part of the whole Apple subscriber database can be stored on iPhone or not, that’s irrelevant. Routing decision to send message as private-to-private is made according to ‘815 patent:

col. 22, lines 27-33

to the call controller (**14**). If at block **402**, a dialing profile having a user name field **258** that matches the callee identifier is found, block **406** directs the processor **202** to set the call type flag to indicate that the call is a private network call and then the processor is directed to block **280** of FIG. **8**A. Thus, the call is classified as a private network call when the callee identifier identifies a subscriber to the private network.

If ‘callee’ subscriber is not achievable in the Apple network, so only legacy PSTN identifier is available, message is sent as a **green** SMS message **private-to-public**. Either server makes this decision and sends it via the SMS gateway, or that information about ‘callee’ is provided to ‘caller’ iPhone, and it makes routing decision and sends SMS message via its own cellular provider. It is probably a more complex combination of both, but it doesn’t matter. The routing decision to send message as private-to-public is made according to ‘815 patent:

col. 22, lines 61-67

Subscriber to Non-Subscriber Calls

Not all calls will be subscriber to subscriber calls and this will be detected by the processor **202** of FIG. **7** when it executes block **269** in FIG. **8**B, and does not find a DID bank table record that is associated with the callee, in the DID bank table. When this occurs, the call is classified as a public network call by directing the processor **202** to block **408** of

The above noted deficiencies are just some of the non-limiting examples that illustrate why the '815 patent is not applicable to iMessage, or other Apple products and services, such as FaceTime.

The same arguments noted above are applicable to Facetime and Facetime Audio, with the exception that currently both applications run calls between private subscribers, while iMessage can send SMS to legacy PSTN network. Any telephony application, from Bell’s time, has two components: signaling (ring in the past) and media (actual conversation). Media these days includes very different content: audio, video, text and multimedia messages, etc. Signaling, in the early days of PSTN, served only to set up the call and tear it down. ‘815 patent obviously deals with signaling, no matter what kind of media will be exchanged – audio, video or text.

Facetime and Facetime Audio setup private to private communication, assuming callee number has associated Apple ID (registered by user or auto-generated from the phone number). From call setup perspective, they make the same decision to route call private-to-private, as disclosed in '815 patent.

See these claims, for references to private networks, on the same and different geographical nodes:

**12**. The process of claim **7** wherein classifying comprises classifying said call as a private network call when said reformatted callee identifier identifies a subscriber to the private network.

**13**. The process of claim **7** wherein classifying comprises determining whether said callee identifier complies with a pre-defined username format and, if so, classifying the call as a private network call.

**18**. The process of claim **17** wherein when said node associated with said caller is not the same as the node associated with the callee, producing a routing message including said caller identifier, said reformatted callee identifier and an identification of a private network node associated with said callee and communicating said routing message to a call controller.

B. '566 patent

Voip-Pal also contends that '566 patent is applicable to Apple's WiFi calling technology. We do not see any correlation between claims of the '566 patent and WiFi calling. The claims of the '566 patent include numerous limitations, yet Voip-Pal does not explain how any of the limitations are purportedly satisfied by WiFi calling. For example, each claim of the '566 patent, among other things, requires a record containing a caller and callee RTP port identifier that identifies a port on each side of a media relay server through which the RTP transmissions pass. We do not see how this basic limitation is satisfied by Apple's WiFi calling feature. Similarly, we do not see how the other numerous limitations are satisfied by the WiFi calling technology. Therefore, we do not believe the '566 patent is relevant to Apple's products or services.

C. '507, '805, '378, and '234 patents

Regarding the '507, '805, '378, and '234 patents, Voip-Pal does not allege that any particular claim of these patents is applicable to any of the Apple products. Instead, the materials include only a table that makes only vague reference that the patents "may be used," "will be used," or "not used, but will be beneficial to use" in Apple's technology. Based on our initial review and the information you provided, we do not see how these patents are relevant to any Apple technology.

II. Conclusion

For at least these reasons, we do not believe Apple needs a license to Voip-Pal's patents. If you disagree with our assessment, please provide me with a detailed explanation and support for your positions, including detailed claim charts explaining the basis for your assertion.

**7B. Attachment to E-Mail dated October 15 2014 - Prior Art Search**

A table-based explanation of how VoIP-Pal's patents extended the utility of the prior art in Internet-based telephony

# The Centrality of VoIP-Pal, Inc.'s Patent Portfolio to Effective Peer to Peer Voice over Internet Protocol Communication

**Thomas and Thomas**
**Attorneys at Law**
**2740 East 1700 North**
**Layton, Utah 84040**

**Client Privileged Information**

The prior art before the granting of the VoIP-Pal patents provided a very limited set of processes for accomplishing the peer-to-peer communications that are central to current IP-based telephony, social media and related web-based communication. Professor Ed Candy, described systems existing prior to the granting of the VoIP-Pal patents as lacking ”access, interconnect, number management, or comparable services.” Without the VoIP-Pal patents, Professor Candy continues, “Most subscriber numbers will be inaccessible and lack appropriate signaling conventions and prescribed commercial interconnect agreements.”

The following tables, arranged chronologically by priority date, illustrate the fundamental nature of the VoIP-Pal patents by addressing two among the six major VoIP-Pal patents and identify the patents that constitute the major prior art prior to the VoIP-Pal patents and describe the functionality added through the VoIP-Pal “Routing Billing and Rating” and “Mobile Gateway” patents.

**US 8,542,815**
**Routing Billing and Rating**

| **Patent** | **Dates** | **Major Prior Art** | **Functionality Added by VoIP Patents** |
|---|---|---|---|
| **US7068668, US7486667, US8125982, US8724643, US20030095539, US20060251056, US20090129566, US20120113981, US20140211789** | **Priority date Jan 7, 2000**<br><br>**Filing date Jan 7, 2000**<br><br>**Publication date Jun 27, 2006** | US 7068668 teaches a real-time interface between the public switched telephone network (PSTN) and an Internet Protocol (IP) network provides voice to data and data to voice conversion between the PSTN and the IP network in a seamless process. The interface, which is a central communication network, performs Class 5 switching between the PSTN and the IP network, besides providing enhanced services. Upon receiving a call, the central communication network simultaneously routes the call to a plurality of preprogrammed numbers on the PSTN and on the IP network. | US 7068668 teaches a real-time interface between a PSTN and an IP system, but the role of stored number is to facilitate group broadcast through a centralized server. There is no equivalent to the dialing profile of US 8,542,815, nor to the purposes and effects of the interoperable systems it provides. |

| | | | |
|---|---|---|---|
| **US 7995589, EP1266516A2, EP1266516B1, US6934279, US20060007940, WO2001069899A2, WO2001069899A3** | **Priority date Mar 13, 2000**<br><br>**Filing date Aug 23, 2005**<br><br>**Publication date Aug 9, 2011** | US 7995589 teaches a method and an apparatus of transmitting voice over a data network. The method disclosed includes providing a user interface in a control system for call control and to display information relating to a call session. The control system communicates one or more control messages (e.g., Session Initiation Protocol or SIP messages) over the data network to establish a call session with a remote device in response to receipt of a request through the user interface. One or more commands are transmitted to a voice device associated with the control system to establish the call session between the voice device and the remote device over the data network. A Real-Time Protocol (RTP) link may be established between the voice device and the remote device. | Although US 7995589 teaches a method and an apparatus of communicating over a data network, it does not disclose the single number as part of a seamless sophisticated international database and the associated routing, billing and rating functions disclosed by US 8,542,815. |
| **US7400881, CN101069390A, CN101069390B, EP1829300A1, EP1829300A4, EP1829300B1, US20060142011, WO2006067269A1** | **Priority date Dec 23, 2004**<br><br>**Filing date Apr 14, 2005**<br><br>**Pub date**<br><br>**Jul 15, 2008** | US 7400881 teaches a method for routing calls and messages in a communication system. A mobile station registers to a call control node using a logical name. The logical name is mapped in a directory to an international mobile subscriber identity. The call control node performs a location update to a home location register using the international mobile subscriber identity. The mobile station is reached using a called party number. As a terminating call or message is received to a core network, a roaming number is allocated | Although the international mobile subscriber identity taught in US 7400881 involves a database with some limited resemblance to the caller dialing profiles of US 8,542,815 , the information in the database record is far less comprehensive than that of patent US 8,542,815 and the use of the database solely involves allocating a roaming local number to allow for local rates to be charged to the |

| | | | |
|---|---|---|---|
| | | for the mobile station, and the call or message is routed to the call control entity currently serving the mobile station. | subscriber. It discloses none of the routing, rating or billing systems of US 8,542,815 . |
| **US8204044, CN101095329A, CN101095329B, CN102833232A, DE112005003306T5, US7593390, US8605714, US20060146797, US20100008345, US20120250624, WO2006072099A1** | **Priority date Dec 30, 2004**<br><br>**Filing date Sep 21, 2009**<br><br>**Publication date Jun 19, 2012** | US 8204044 teaches a method for receiving a request from a first mobile device to invite a second mobile device to participate in a VoIP session. The second device may be identified in the request by a network identifier. The network identifier is related to a mobile IP (MIP) address of the second device and a second IP address. An invitation is sent to the MIP address of the second device which may include a MIP address of the first device and a first IP address. A response to the invitation may be received from the second device. The response may be modified to include a first IP header that includes the MIP address of the second device and a second IP header to include the second IP address. The modified response is forwarded to the first device. After receipt of the modified response, the first device is configured to establish an IP connection for VoIP communication with the second device. | US 8204044 teaches a method that includes a "network identifier" related to a mobile IP address which appears to serve one of the functions of the dialing profile of US 8,542,815. However, the network identifier is, at most, a single element of the database that comprises the dialing profile. Functionally this patent discloses only a small part of the routing and none of the rating and billing disclosed in US 8,542,815. |
| **US 7664495, US20100105379** | **Priority date Apr 21, 2005**<br><br>**Filing date Dec 5, 2005** | US 7664495 teaches systems and methods that provide a single E.164 number for voice and data call redirection and telephony services such as caller identification, regardless of in which type of network a dual mode mobile device operates. When the dual mode device registers and is active in | The use of a single E.164 number for a dual mode mobile device, as taught in US 7664495, has some similarity to the assignment of a single number in US 8,542,815, but the nature of the database and the interoperability of the |

| | | | |
|---|---|---|---|
| | **Publication date Feb 16, 2010** | a GSM network, temporary routing and status updates are triggered and resultant information is maintained in both networks. A mobile terminated call is routed through an enterprise WLAN with call control within the enterprise being handled by SIP or H.323 signaling, and the call is redirected to the mobile device in the GSM network, where call control is assumed by the SS7 network. Services are provided using the protocols native to the active network and the single E.164 is used consistently along with or lieu of the temporary routing information for subscriber identity specific functions, such as caller identification and voice mail. | system lack the sophistication and refined transactional functions, including the capacity for billing and rating that are disclosed in US 8,542,815. |

**US8630234**

**Mobile Gateway**

| **Patent** | **Dates** | **Major Prior Art** | **Functionality Added by VoIP Patents** |
|---|---|---|---|
| **CA2299037 A1, EP1032224A2, EP1032224A3** | **Priority Date Feb 22, 1999**<br><br>**Filing Date Feb 21, 2000**<br><br>**Pub Date Aug 22, 2000** | CA2299037 teaches a method allowing a user to set up landline calls using a mobile telephone. A user initiates outgoing calls by inputting into the mobile phone the phone numbers of a remote phone of a called party and a local landline phone convenient for use by the user. A message containing these phone numbers is sent by the mobile telephone to a remote telephone call origination platform, which establishes a | CA2299037 does teach some of the fundamental processes of US8630234. For example, it teaches sending two telephone numbers through a data network to a RTCO platform in order to make the communication; whereas US8630234 teaches a method and apparatus by which an access server selects a access code that is within the same |

| | | | |
|---|---|---|---|
| | | bridging connection between the remote phone and the local phone. An incoming call is received by signaling the user of an incoming call on the mobile phone. The user inputs the number of a convenient landline phone into the mobile phone, which in turn signals the remote telephone call origination platform to forward the incoming call to the designated landline phone. | network or locality of the callee identifier in order to make the call. Nor does it teach an access code request message that comprises the callee identifier and a location identifier associated with the location of the mobile telephone. Nor does it teach transmitting this request through non-voice network. Nor does it teach an access code reply message comprised with a temporary access code different from the callee identifier and associated a location identifier. |
| **US20080187122 A1, WO2006078175A2, WO2006078175A3** | **Priority Date Jan 20, 2005**<br><br>**Filing Date Jan 17, 2006**<br><br>**Pub Date Aug 7, 2008** | US20080187122 A1 teaches how to provide a globally useful telephone number a URI character string which may be similar to an email address may be provided to a mobile phone server or an internet server for translation to the actual phone number and establishment of a call to that number. | US20080187122 A1 fails to provide the fundamental functionality of US8630234 because it does not teach an access code request message that comprises the callee identifier and a location identifier associated with the location of the mobile telephone. Nor does it teach transmitting this request through non-voice network. Nor does it teach a pool of access codes affiliated with different localities in order to make local calls to callees. Nor does it teach an access code reply message comprised with an temporary access code different from the callee identifier and associated a location identifier. |

| | | | |
|---|---|---|---|
| **US7929955 B1, US20110201321** | **Priority Date Apr 28, 2006**<br><br>**Filing Date Apr 28, 2006**<br><br>**Pub Date Apr 19, 2011** | US7929955 B1 teaches a method comprising a receiver component that receives a call request. The call request originates from a mobile handset that is associated with multiple numbers. An analysis component analyzes the call request and selects a caller line identification (CLI) from amongst a plurality of CLIs to provide to a called party that is a subject of the call request. For instance, the mobile handset and/or a network server can comprise the receiver component and/or the analysis component. | While US7929955 teaches selecting a CLI from plurality of CLIs much as US8630234 teaches selecting an access code from a pool of access code, it does not teach an access code request message that comprises the callee identifier and a location identifier associated with the location of the mobile telephone. Nor does it teach transmitting this request through non-voice network. Nor does it teach a pool of access codes affiliated with different localities in order to make local calls to callees. Nor does it teach an access code reply message comprised with a temporary access code different from the callee identifier and associated a location identifier. |
| **US20080167039 A1 US20080166999, US20080167019, US20080167020, US20080188227, WO2008085614A2, WO2008085614A3, WO2008085614A8, WO2008086350A2, WO2008086350A3** | **Priority Date Jan 8, 2007**<br><br>**Filing Date Nov 30, 2007**<br><br>**Pub Date Jul 10, 2008** | US20080167039 A1 teaches a method of providing a local access number to a subscriber may include receiving subscriber locale information indicating a location of a subscriber, mapping the subscriber locale information to one or more local access numbers, identifying, from the one or more local access numbers, a local access number corresponding to the subscriber locale information and transmitting the identified local access number to the subscriber's mobile device. Although this patent teaches | US20080167039 discloses significantly less functionality than US8630234. It does not teach transmitting an access code request message, potentially through a non-voice network, that comprises the callee identifier and a location identifier associated with the location of the mobile telephone; and accessing code reply message comprised with an temporary access code different from the callee |

| | | | |
|---|---|---|---|
| | | providing local access numbers to subscribes using mobile devices through receiving the subscribers locale information and mapping it to access numbers and transmitting the local access number to the mobile device. | identifier and the associated location identifier. |
| **US8605869 B1** | **Priority Date Aug 8, 2008**<br><br>**Filing Date Aug 8, 2008**<br><br>**Pub Date Dec 10, 2013** | US8605869 B1 teaches a method comprising a caller may specify a callee's telephone number and be connected directly to a carrier provided voice mail facility associated with the identified the telephone number, even though the callee's carrier may not be the same as the caller's carrier. In the disclosed technique, a telephony server places a “Send a call” request to a server which then sends a signaling call that busies out the channel associated with the callee. The telephony server places a second call (the actual voice message) upon confirmation that the signaling call has been initiated, forcing the second call to the carrier's voice mail facility associated with the callee, since the first signaling call busied the first channel. | US8605869 does not provide the functionality of US8630234 because it does not teach how to send a long distance call using a mobile device with the following steps: transmitting an access code request message that comprises the callee identifier and a location identifier associated with the location of the mobile telephone; selecting an access code from a pool of access codes affiliated with different localities in order to make local calls to callees; accessing code reply message comprised with an temporary access code different from the callee identifier and associated a location identifier. |

(12) **United States Patent**
**Perreault et al.**

(10) **Patent No.: US 8,542,815 B2**
(45) **Date of Patent: Sep. 24, 2013**

(54) **PRODUCING ROUTING MESSAGES FOR VOICE OVER IP COMMUNICATIONS**

(75) Inventors: **Clay Perreault**, Panama City (PA); **Steve Nicholson**, Hamilton (NZ); **Rod Thomson**, North Vancouver (CA); **Johan Emil Viktor Bjorsell**, Vancouver (CA); **Fuad Arafa**, Vancouver (CA)

(73) Assignee: **Digifonica (International) Limited**, Vancouver (CA)

( * ) Notice: Subject to any disclaimer, the term of this patent is extended or adjusted under 35 U.S.C. 154(b) by 853 days.

(21) Appl. No.: **12/513,147**

(22) PCT Filed: **Nov. 1, 2007**

(86) PCT No.: **PCT/CA2007/001956**

§ 371 (c)(1),
(2), (4) Date: **Mar. 1, 2010**

(87) PCT Pub. No.: **WO2008/052340**

PCT Pub. Date: **May 8, 2008**

(65) **Prior Publication Data**

US 2010/0150328 A1 Jun. 17, 2010

**Related U.S. Application Data**

(60) Provisional application No. 60/856,212, filed on Nov. 2, 2006.

(51) **Int. Cl.**
***H04M 7/00*** (2006.01)

(52) **U.S. Cl.**
USPC ..... **379/221.02**; 379/142.04

(58) **Field of Classification Search**
USPC ..... 379/142.04, 220.01–221.06
See application file for complete search history.

(56) **References Cited**

U.S. PATENT DOCUMENTS

4,916,491 A 4/1990 Katoh
4,992,971 A * 2/1991 Hayashi ..... 717/140

(Continued)

FOREIGN PATENT DOCUMENTS

CA 2249668 4/1999
EP 1 389 862 A1 2/2004

(Continued)

OTHER PUBLICATIONS

Supplementary European Search Report for European Application No. 07816106 dated Jun. 18, 2012.

(Continued)

*Primary Examiner* — Simon Sing
(74) *Attorney, Agent, or Firm* — Knobbe Martens Olson & Bear LLP

(57) **ABSTRACT**

A process and apparatus to facilitate communication between callers and callees in a system comprising a plurality of nodes with which callers and callees are associated is disclosed. In response to initiation of a call by a calling subscriber, a caller identifier and a callee identifier are received. Call classification criteria associated with the caller identifier are used to classify the call as a public network call or a private network call. A routing message identifying an address, on the private network, associated with the callee is produced when the call is classified as a private network call and a routing message identifying a gateway to the public network is produced when the call is classified as a public network call.

**111 Claims, 32 Drawing Sheets**

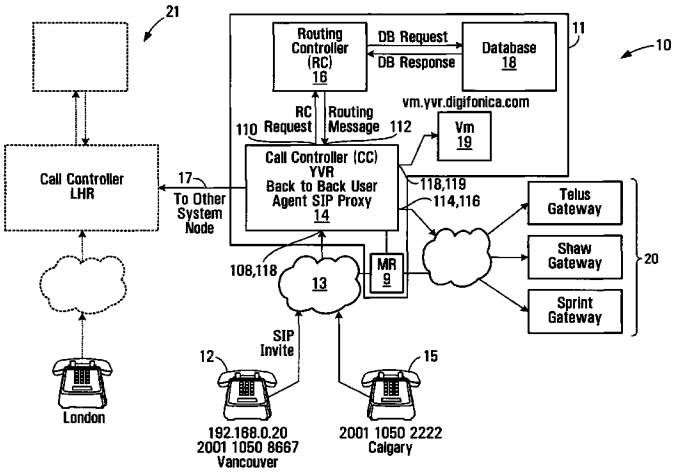

(56) **References Cited**

U.S. PATENT DOCUMENTS

| | | | | |
|---|---|---|---|---|
| 5,146,491 | A | | 9/1992 | Silver et al. |
| 5,247,571 | A | | 9/1993 | Kay et al. |
| 5,303,297 | A | | 4/1994 | Hillis |
| 5,359,642 | A | | 10/1994 | Castro |
| 5,425,085 | A | | 6/1995 | Weinberger et al. |
| 5,440,621 | A | | 8/1995 | Castro |
| 5,454,030 | A | | 9/1995 | de Oliveira et al. |
| 5,469,497 | A | | 11/1995 | Pierce et al. |
| 5,506,893 | A | | 4/1996 | Buscher et al. |
| 5,519,769 | A | | 5/1996 | Weinberger et al. |
| 5,559,871 | A | | 9/1996 | Smith |
| 5,590,133 | A | | 12/1996 | Billstrom et al. |
| 5,608,786 | A | | 3/1997 | Gordon |
| 5,621,787 | A | | 4/1997 | McKoy et al. |
| 5,633,913 | A | * | 5/1997 | Talarmo ..... 455/446 |
| 5,661,790 | A | | 8/1997 | Hsu |
| 5,712,907 | A | | 1/1998 | Wegner et al. |
| 5,724,355 | A | | 3/1998 | Bruno et al. |
| 5,726,984 | A | | 3/1998 | Kubler et al. |
| 5,737,414 | A | | 4/1998 | Walker et al. |
| 5,751,961 | A | | 5/1998 | Smyk |
| 5,793,762 | A | | 8/1998 | Penners et al. |
| 5,799,072 | A | | 8/1998 | Vulcan et al. |
| 5,802,502 | A | | 9/1998 | Gell et al. |
| 5,825,863 | A | | 10/1998 | Walker |
| 5,828,740 | A | | 10/1998 | Khuc et al. |
| 5,838,682 | A | | 11/1998 | Dekelbaum et al. |
| 5,845,267 | A | | 12/1998 | Ronen |
| 5,850,433 | A | | 12/1998 | Rondeau |
| 5,864,610 | A | | 1/1999 | Ronen |
| 5,867,495 | A | | 2/1999 | Elliott et al. |
| 5,883,891 | A | | 3/1999 | Williams et al. |
| 5,889,774 | A | | 3/1999 | Mirashrafi et al. |
| 5,905,736 | A | | 5/1999 | Ronen et al. |
| 5,907,547 | A | | 5/1999 | Foladare et al. |
| 5,910,946 | A | | 6/1999 | Csapo |
| 5,915,005 | A | | 6/1999 | He |
| 5,923,659 | A | | 7/1999 | Curry et al. |
| 5,930,343 | A | | 7/1999 | Vasquez |
| 5,937,045 | A | | 8/1999 | Yaoya et al. |
| 5,940,598 | A | | 8/1999 | Strauss et al. |
| 5,953,504 | A | | 9/1999 | Sokal et al. |
| 5,956,391 | A | | 9/1999 | Melen et al. |
| 5,970,477 | A | | 10/1999 | Roden |
| 5,974,043 | A | | 10/1999 | Solomon |
| 5,991,291 | A | | 11/1999 | Asai et al. |
| 6,005,926 | A | | 12/1999 | Mashinsky |
| 6,014,379 | A | | 1/2000 | White et al. |
| 6,021,126 | A | | 2/2000 | White et al. |
| 6,052,445 | A | | 4/2000 | Bashoura et al. |
| 6,058,300 | A | | 5/2000 | Hanson |
| 6,069,890 | A | | 5/2000 | White et al. |
| 6,073,013 | A | | 6/2000 | Agre et al. |
| 6,078,647 | A | * | 6/2000 | D'Eletto ..... 379/32.01 |
| 6,104,704 | A | | 8/2000 | Buhler et al. |
| 6,104,711 | A | | 8/2000 | Voit |
| 6,115,737 | A | | 9/2000 | Ely et al. |
| 6,128,304 | A | | 10/2000 | Gardell et al. |
| 6,137,869 | A | | 10/2000 | Voit et al. |
| 6,141,404 | A | | 10/2000 | Westerlage et al. |
| 6,151,385 | A | | 11/2000 | Reich et al. |
| 6,188,752 | B1 | | 2/2001 | Lesley |
| 6,282,574 | B1 | | 8/2001 | Voit |
| 6,298,062 | B1 | | 10/2001 | Gardell et al. |
| 6,351,464 | B1 | | 2/2002 | Galvin et al. |
| 6,359,880 | B1 | | 3/2002 | Curry et al. |
| 6,430,275 | B1 | | 8/2002 | Voit et al. |
| 6,507,644 | B1 | | 1/2003 | Henderson et al. |
| 6,597,686 | B1 | | 7/2003 | Smyk |
| 6,674,745 | B1 | | 1/2004 | Schuster et al. |
| 6,724,860 | B2 | | 4/2004 | Stumer et al. |
| 6,744,858 | B1 | | 6/2004 | Ryan et al. |
| 6,766,159 | B2 | | 7/2004 | Lindholm |
| 6,798,767 | B1 | * | 9/2004 | Alexander et al. ..... 370/352 |
| 6,819,929 | B2 | | 11/2004 | Antonucci et al. |
| 6,954,453 | B1 | | 10/2005 | Schindler |
| 6,963,557 | B2 | | 11/2005 | Knox |
| 7,046,658 | B1 | | 5/2006 | Kundaje |
| 7,055,174 | B1 | | 5/2006 | Cope et al. |
| 7,068,772 | B1 | | 6/2006 | Widger et al. |
| 7,079,526 | B1 | | 7/2006 | Wipliez et al. |
| 7,120,682 | B1 | | 10/2006 | Salama |
| 7,212,522 | B1 | | 5/2007 | Shankar et al. |
| 7,454,510 | B2 | | 11/2008 | Kleyman et al. |
| 7,950,046 | B2 | | 5/2011 | Kropivny |
| 8,116,307 | B1 | | 2/2012 | Thesayi et al. |
| 2002/0051518 | A1 | | 5/2002 | Bondy et al. |
| 2002/0116464 | A1 | | 8/2002 | Mak |
| 2002/0122391 | A1 | | 9/2002 | Shalit |
| 2003/0200311 | A1 | | 10/2003 | Baum |
| 2003/0219103 | A1 | | 11/2003 | Rao et al. |
| 2004/0022237 | A1 | | 2/2004 | Elliot et al. |
| 2004/0157629 | A1 | | 8/2004 | Kallio et al. |
| 2004/0165709 | A1 | | 8/2004 | Pence et al. |
| 2004/0181599 | A1 | | 9/2004 | Kreusch et al. |
| 2004/0202295 | A1 | | 10/2004 | Shen et al. |
| 2004/0240439 | A1 | | 12/2004 | Castleberry et al. |
| 2004/0255126 | A1 | | 12/2004 | Reith |
| 2005/0025043 | A1 | | 2/2005 | Mussman et al. |
| 2005/0083911 | A1 | | 4/2005 | Grabelsky et al. |
| 2005/0094651 | A1 | | 5/2005 | Lutz et al. |
| 2005/0169248 | A1 | | 8/2005 | Truesdale et al. |
| 2005/0174937 | A1 | | 8/2005 | Scoggins et al. |
| 2005/0177843 | A1 | | 8/2005 | Williams |
| 2006/0072547 | A1 | | 4/2006 | Florkey et al. |
| 2006/0072550 | A1 | | 4/2006 | Davis et al. |
| 2006/0093135 | A1 | | 5/2006 | Fiatal et al. |
| 2006/0111116 | A1 | | 5/2006 | Palmer et al. |
| 2006/0153342 | A1 | | 7/2006 | Sasaki |
| 2006/0160565 | A1 | | 7/2006 | Singh et al. |
| 2006/0177035 | A1 | | 8/2006 | Cope et al. |
| 2006/0209768 | A1 | | 9/2006 | Yan et al. |
| 2006/0258328 | A1 | | 11/2006 | Godoy |
| 2006/0264200 | A1 | | 11/2006 | Laiho et al. |
| 2007/0036143 | A1 | | 2/2007 | Alt et al. |
| 2007/0112964 | A1 | | 5/2007 | Guedalia et al. |
| 2007/0127676 | A1 | * | 6/2007 | Khadri ..... 379/211.02 |
| 2007/0253418 | A1 | | 11/2007 | Shiri et al. |
| 2008/0037715 | A1 | | 2/2008 | Prozeniuk et al. |
| 2008/0056235 | A1 | | 3/2008 | Albina et al. |
| 2008/0063153 | A1 | | 3/2008 | Krivorot et al. |
| 2009/0028146 | A1 | | 1/2009 | Kleyman et al. |
| 2009/0292539 | A1 | | 11/2009 | Jaroker |
| 2009/0325558 | A1 | | 12/2009 | Pridmore et al. |
| 2010/0086119 | A1 | | 4/2010 | De Luca et al. |

FOREIGN PATENT DOCUMENTS

| | | | |
|---|---|---|---|
| EP | 1 389 862 | B1 | 11/2004 |
| WO | WO 01/89145 | A2 | 11/2001 |
| WO | WO 2007/044454 | A2 | 4/2007 |
| WO | WO 2008/052340 | A1 | 5/2008 |
| WO | WO 2008/064481 | A1 | 6/2008 |
| WO | WO 2008/116296 | A1 | 10/2008 |

OTHER PUBLICATIONS

F. Baker et al. "RFC 3924—Cisco Architecture for Lawful Intercept in IP Networks." Oct. 2004.

Cisco. "Lawful Intercept Requirements Summary." http://www.faqs.org/rfcs/rfc3924.html. Nov. 8, 2006.

Sippy SIP B2BUA. "About Sippy RTPproxy." http://www.rtpproxy.org. Jul. 15, 2009.

ETSI Technical Specification. "Lawful Interception (LI); Handover Interface and Service-Specific Details (SSD) for IP delivery; Part 5: Service-specific details for IP Multimedia Services." Apr. 2008, 25 pgs, v.2.3.1, France.

M. Handley et al. "RFC 2543—SIP: Session Initiation Protocol." Mar. 1999.

The International Search Report and Written Opinion of the International Searching Authority completed Jun. 6, 2008 for related PCT/CA2008/000545.

The International Search Report and Written Opinion of the International Searching Authority completed Feb. 6, 2008 for corresponding PCT/CA2007/001956.

The International Preliminary Report on Patentability mailed May 14, 2009 for corresponding PCT/CA2007/001956.
The International Search Report and Written Opinion of the International Searching Authority completed Mar. 3, 2008 for related PCT/CA2007/002150.
The International Preliminary Report on Patentability mailed Feb. 13, 2009 for related PCT/CA2007/002150.
The International Preliminary Report on Patentability and Written Opinion of the International Searching Authority mailed Feb. 10, 2011 for related PCT Application No. PCT/CA2009/001062, Feb. 10, 2011.
The International Preliminary Report on Patentability mailed Feb. 13, 2009 for corresponding PCT/CA2007/002150.
The International Preliminary Report on Patentability mailed May 14, 2009 for related PCT/CA2007/001956.
The International Search Report and Written Opinion mailed on Mar. 12, 2010 for corresponding PCT Application No. PCT/CA2009/001062.
The International Search Report and Written Opinion of the International Searching Authority completed Feb. 6, 2008 for related PCT/CA2007/001956.
The International Search Report and Written Opinion of the International Searching Authority completed Jun. 6, 2008 for corresponding PCT/CA2008/000545.
The International Search Report completed on Mar. 3, 2008 for corresponding PCT/CA2007/002150.
The Written Opinion and International Search Report completed on Jun. 17, 2010 for related PCT Application No. PCT/CA2009/001317, Jun. 17, 2010.
The International Preliminary Report on Patentability issued on Sep. 29, 2009 for PCT/CA2008/000545.
The International Preliminary Report on Patentability issued on Mar. 20, 2012 for PCT/CA2009/001317.
Townsley, et al.; "RFC 2661—Layer Two Tunneling Protocol 'L2TP'", Aug. 1999.
IP2Location, http://www.ip2location.com/; printed Jun. 20, 2012.
DOTS IP Address Validation, "Overview", http://www.serviceobjects.com/products/dots_ipgeo.asp; printed Jun. 21, 2012.
List of North American Numbering Plan area codes, http://en.wikipedia.org/wiki/List_of_NANP_area_codes; printed Jun. 20, 2012.
DOTS Phone Exchange, "Overview", http://www.serviceobjects.com/demos/PhoneExchangeDemo.asp (URL no longer valid, current URL is http://www.serviceobjects.com/products/phone/phone-exchange); printed Jun. 21, 2012.
Rosenberg, et al.; "RFC 3261—SIP: Session Initiation Protocol", Jun. 2002.
Lind AT&T S: "ENUM Call Flows for VoIP Interworking; draft-lind-enum-callflows-03.txt", Feb. 1, 2002, No. 3, pp. 1-17.
IETF ENUM WG R Stastny OEFEG Informational Numbering for VoIP and Other IP Communications: "Numbering for VoIP and other IP Communications, draft-stastny-enum-numbering-voip-00.txt", Oct. 1, 2003, pp. 1-43.
EPO, Supplementary European Search Report, dated Nov. 2, 2012, Application No. 07855436.7, corresponds to U.S. Appl. No. 12/517,026.

* cited by examiner

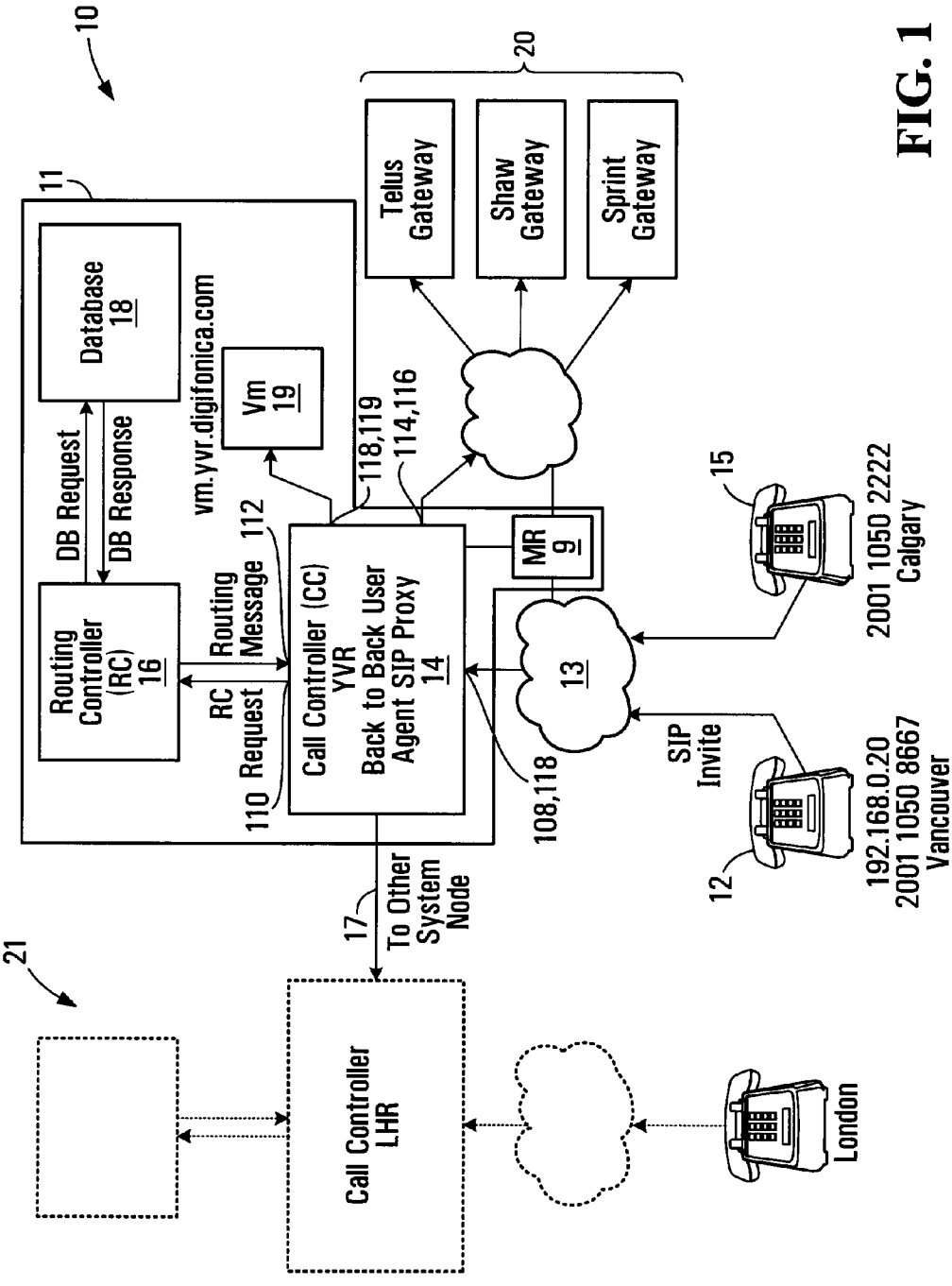
10
11
Database 18
DB Request
DB Response
Routing Controller (RC) 16
RC Request 110
Routing Message 112
vm.yvr.digifonica.com
Vm 19
Call Controller (CC) YVR Back to Back User Agent SIP Proxy 14
118,119
114,116
MR 9
108,118
13
17
To Other System Node
21
Call Controller LHR
20
Telus Gateway
Shaw Gateway
Sprint Gateway
15
2001 1050 2222 Calgary
SIP Invite
12
192.168.0.20 2001 1050 8667 Vancouver
London

FIG. 1

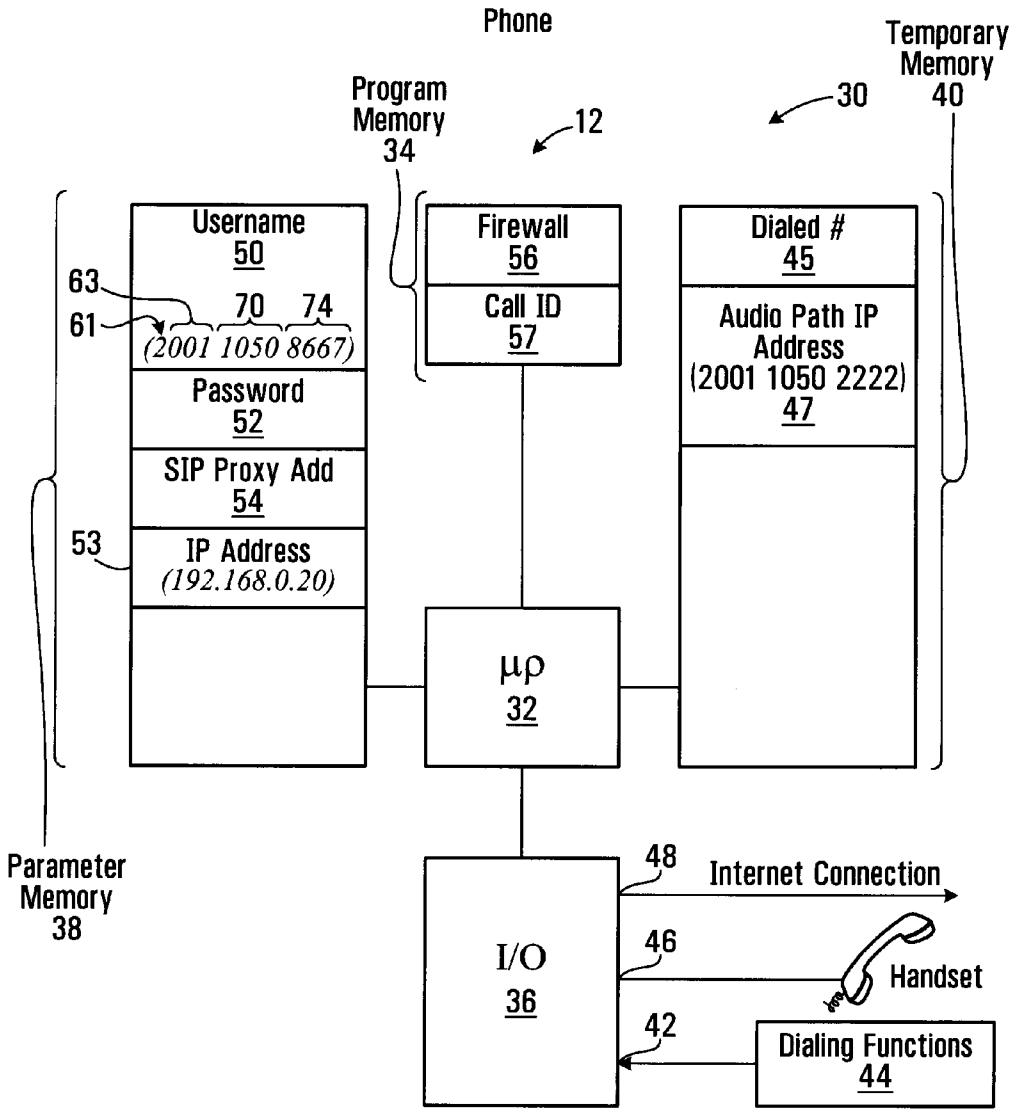
Phone
Temporary Memory 40
Program Memory 34
12
30
Username 50
63
61
70
74
(2001 1050 8667)
Password 52
SIP Proxy Add 54
53
IP Address (192.168.0.20)
Firewall 56
Call ID 57
Dialed # 45
Audio Path IP Address (2001 1050 2222) 47
μρ 32
Parameter Memory 38
I/O 36
48
Internet Connection
46
Handset
42
Dialing Functions 44

FIG. 2

SIP Invite Message

| | | |
|---|---|---|
| 60 | Caller | 2001 1050 8667 |
| 62 | Callee | 2001 1050 2222 |
| 64 | Digest Parameters | XXXXXXX |
| 65 | Call ID | FF10@ 192.168.0.20 |
| 67 | IP Address | 192.168.0.20 |
| 69 | Caller UDP Port | 1 |

FIG. 3

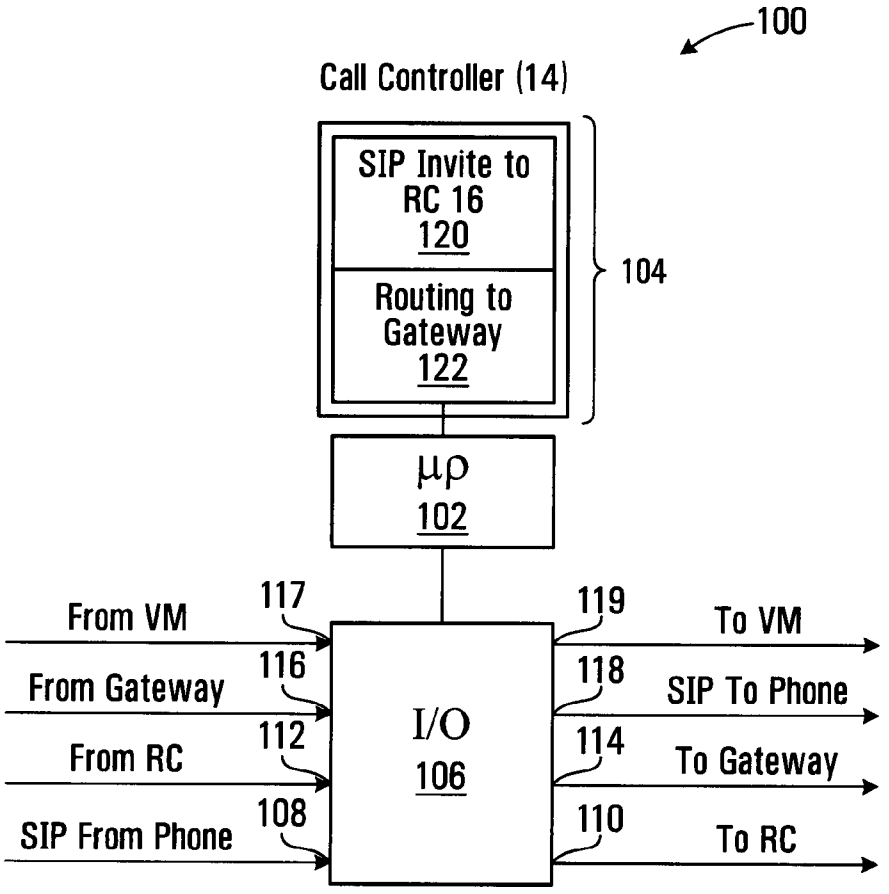


FIG. 4

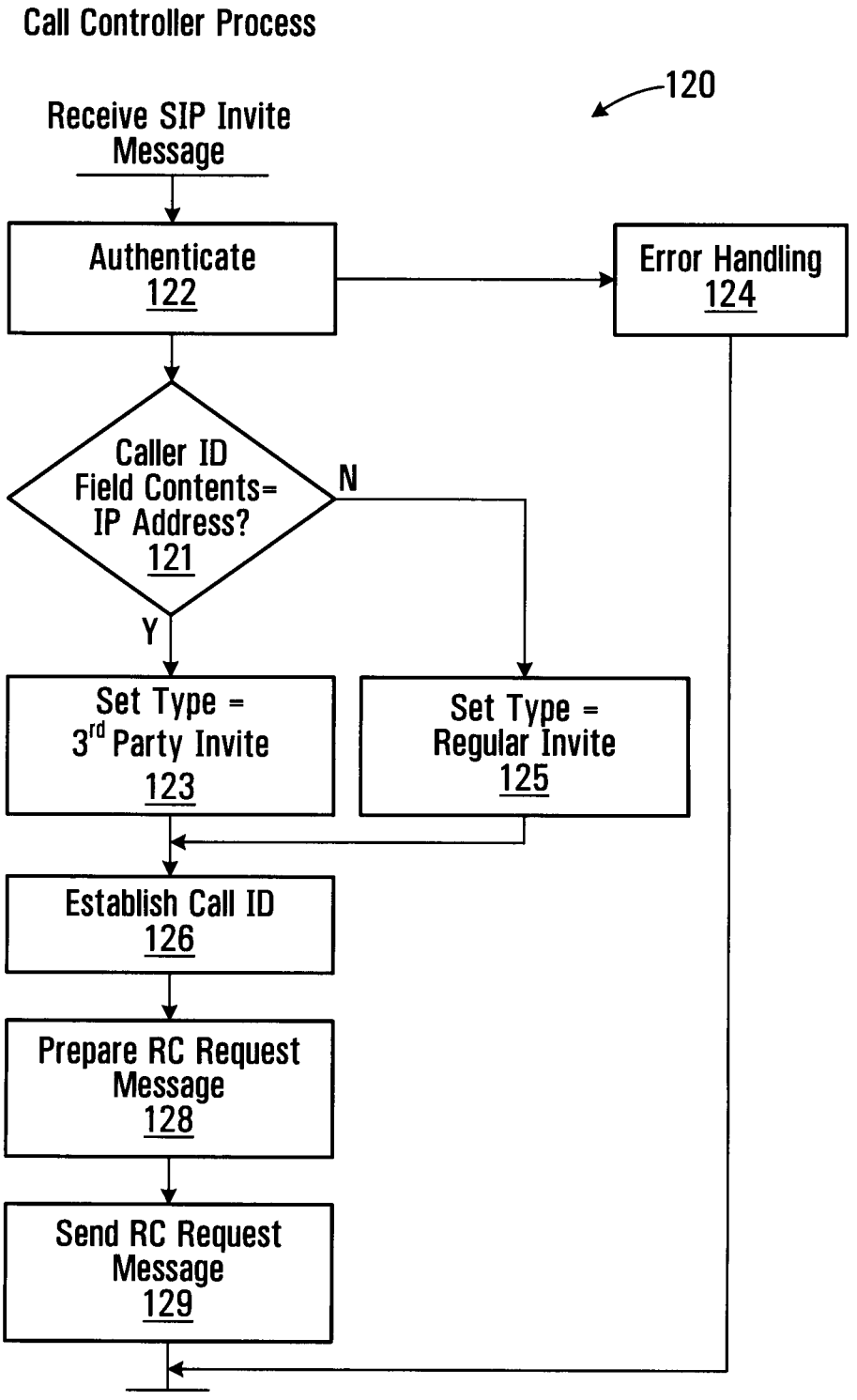
Call Controller Process
120
Receive SIP Invite Message
Authenticate 122
Error Handling 124
Caller ID Field Contents= IP Address? 121
N
Y
Set Type = 3rd Party Invite 123
Set Type = Regular Invite 125
Establish Call ID 126
Prepare RC Request Message 128
Send RC Request Message 129

FIG. 5

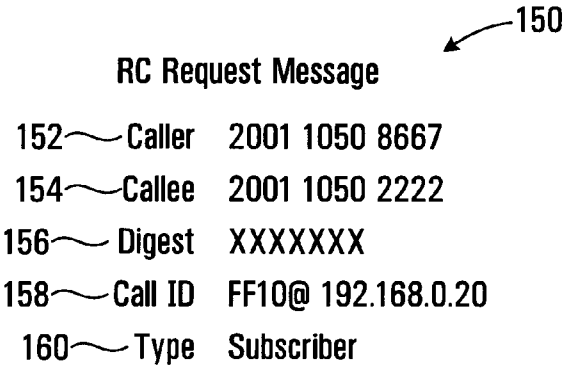
150
RC Request Message
152 Caller 2001 1050 8667
154 Callee 2001 1050 2222
156 Digest XXXXXXX
158 Call ID FF10@ 192.168.0.20
160 Type Subscriber

FIG. 6

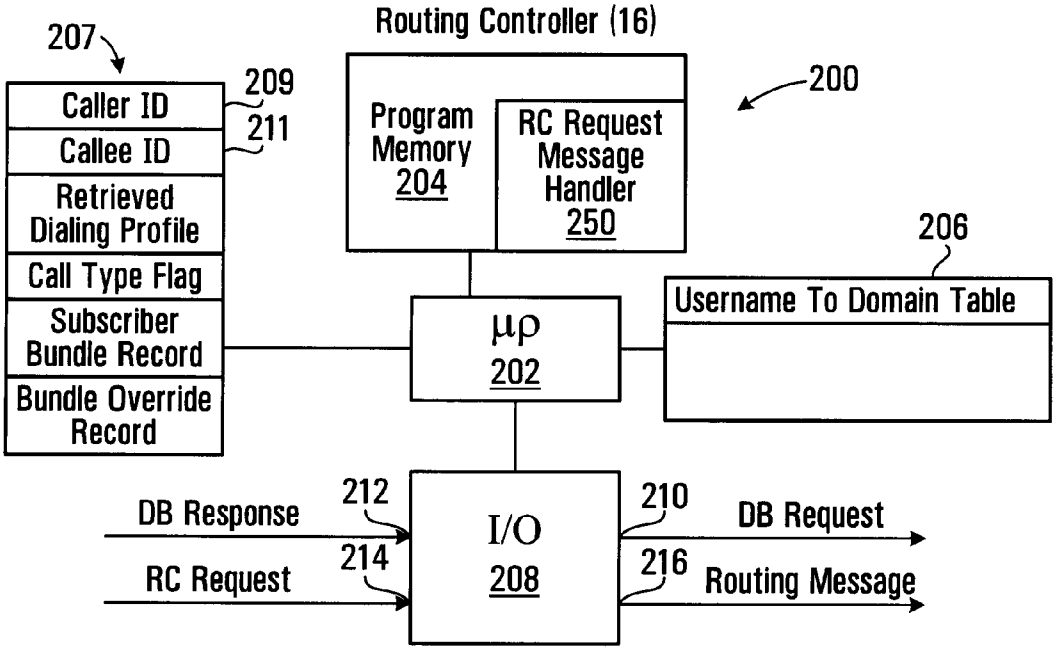
Routing Controller (16)
207
209
211
Caller ID
Callee ID
Retrieved Dialing Profile
Call Type Flag
Subscriber Bundle Record
Bundle Override Record
Program Memory 204
RC Request Message Handler 250
200
206
Username To Domain Table
μρ 202
I/O 208
212
DB Response
214
RC Request
210
DB Request
216
Routing Message

FIG. 7

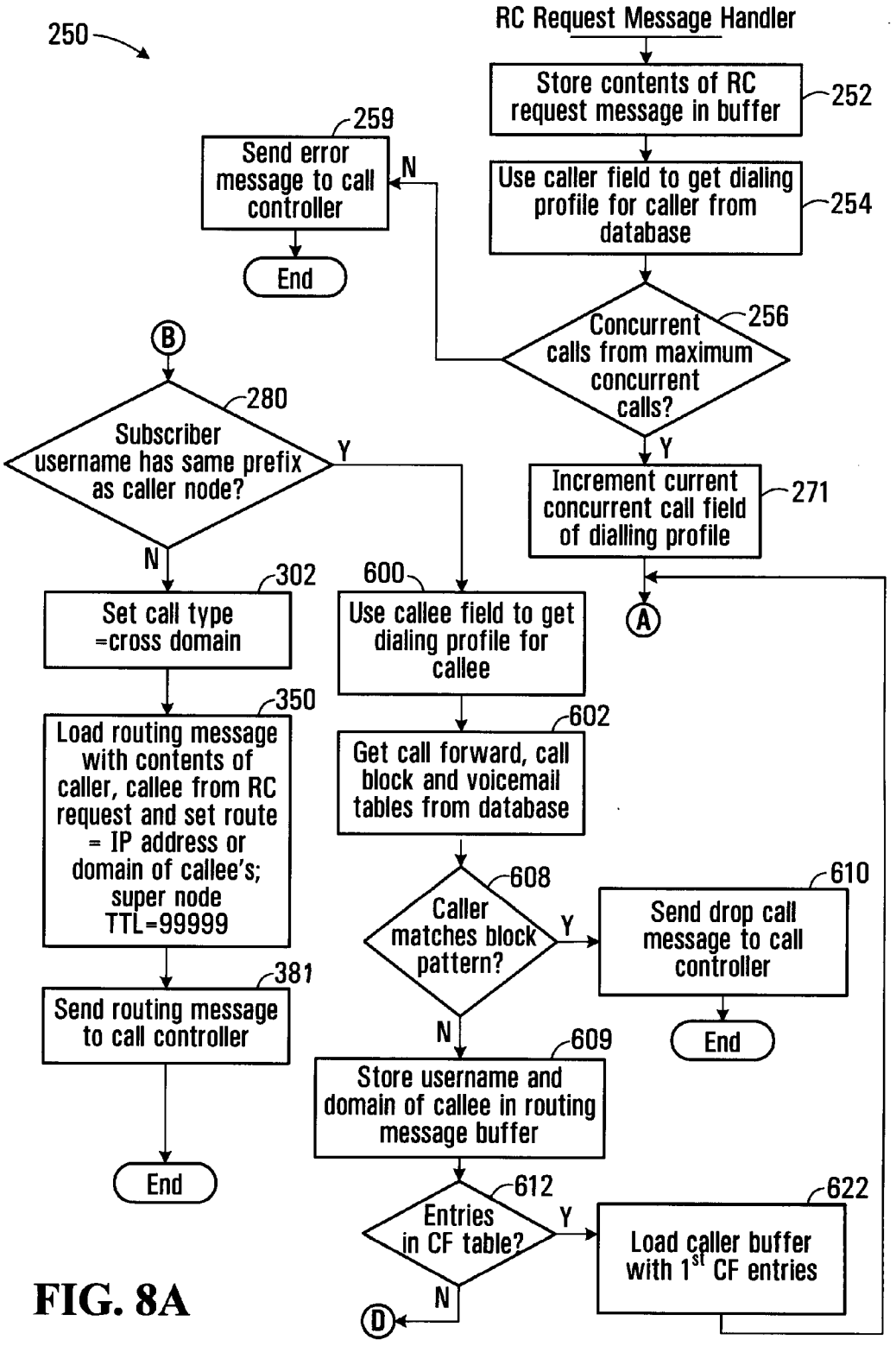
250
RC Request Message Handler
Store contents of RC request message in buffer
252
Use caller field to get dialing profile for caller from database
254
Concurrent calls from maximum concurrent calls?
256
N
Send error message to call controller
259
End
Y
Increment current concurrent call field of dialling profile
271
A
B
Subscriber username has same prefix as caller node?
280
Y
N
Set call type =cross domain
302
Load routing message with contents of caller, callee from RC request and set route = IP address or domain of callee's; super node TTL=99999
350
Send routing message to call controller
381
End
600
Use callee field to get dialing profile for callee
602
Get call forward, call block and voicemail tables from database
Caller matches block pattern?
608
Y
N
Send drop call message to call controller
610
End
Store username and domain of callee in routing message buffer
609
Entries in CF table?
612
Y
N
D
Load caller buffer with 1st CF entries
622

FIG. 8A

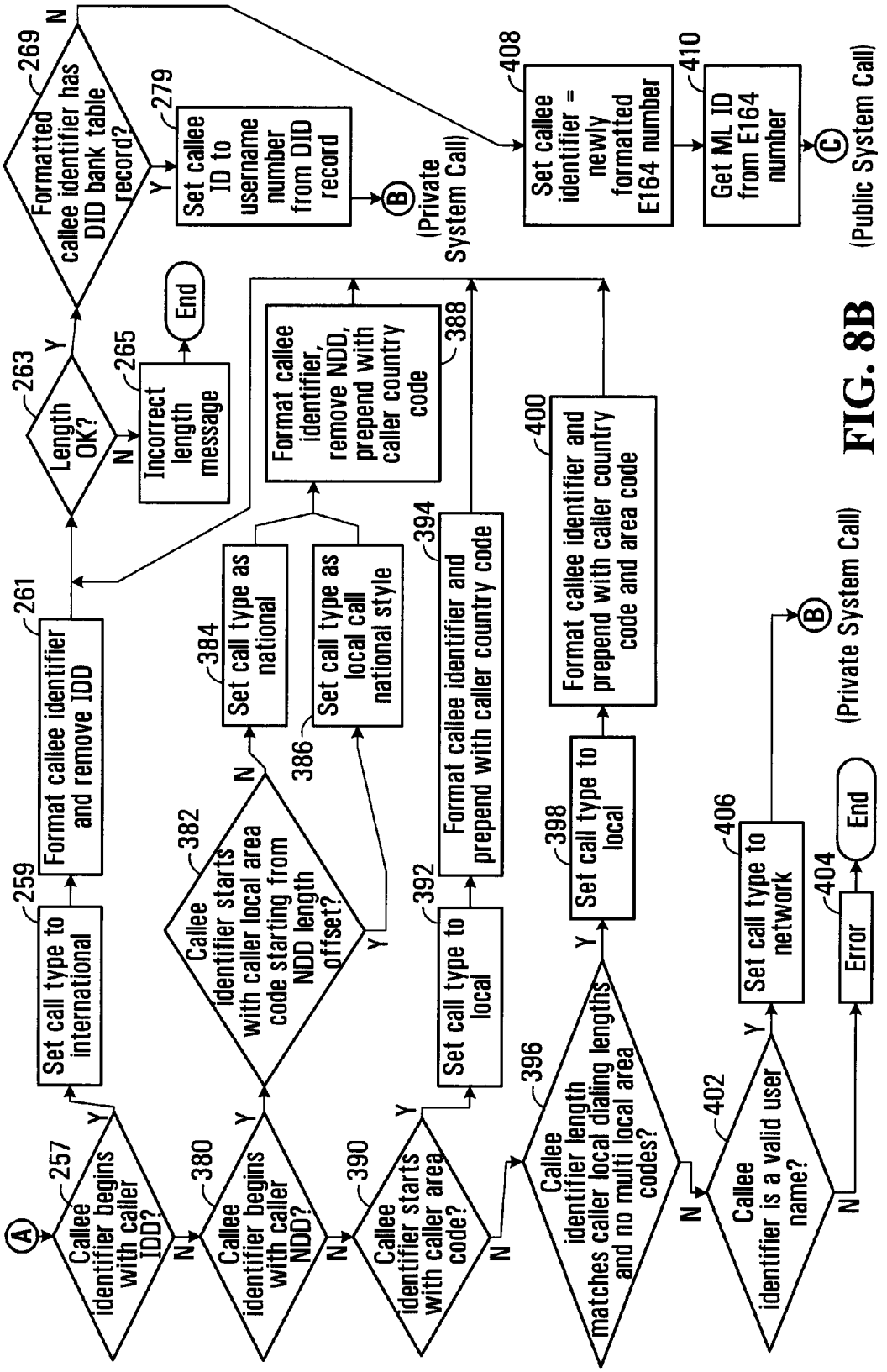
A
257
Callee identifier begins with caller IDD?
Y
259
Set call type to international
261
Format callee identifier and remove IDD
N
380
Callee identifier begins with caller NDD?
Y
382
Callee identifier starts with caller local area code starting from NDD length offset?
N
384
Set call type as national
386
Set call type as local call national style
Y
388
Format callee identifier, remove NDD, prepend with caller country code
N
390
Callee identifier starts with caller area code?
Y
392
Set call type to local
394
Format callee identifier and prepend with caller country code
N
396
Callee identifier length matches caller local dialing lengths and no multi local area codes?
Y
398
Set call type to local
400
Format callee identifier and prepend with caller country code and area code
N
402
Callee identifier is a valid user name?
Y
406
Set call type to network
B
(Private System Call)
N
404
Error
End
263
Length OK?
Y
N
265
Incorrect length message
End
269
Formatted callee identifier has DID bank table record?
Y
279
Set callee ID to username number from DID record
B
(Private System Call)
N
408
Set callee identifier = newly formatted E164 number
410
Get ML ID from E164 number
C
(Public System Call)

FIG. 8B

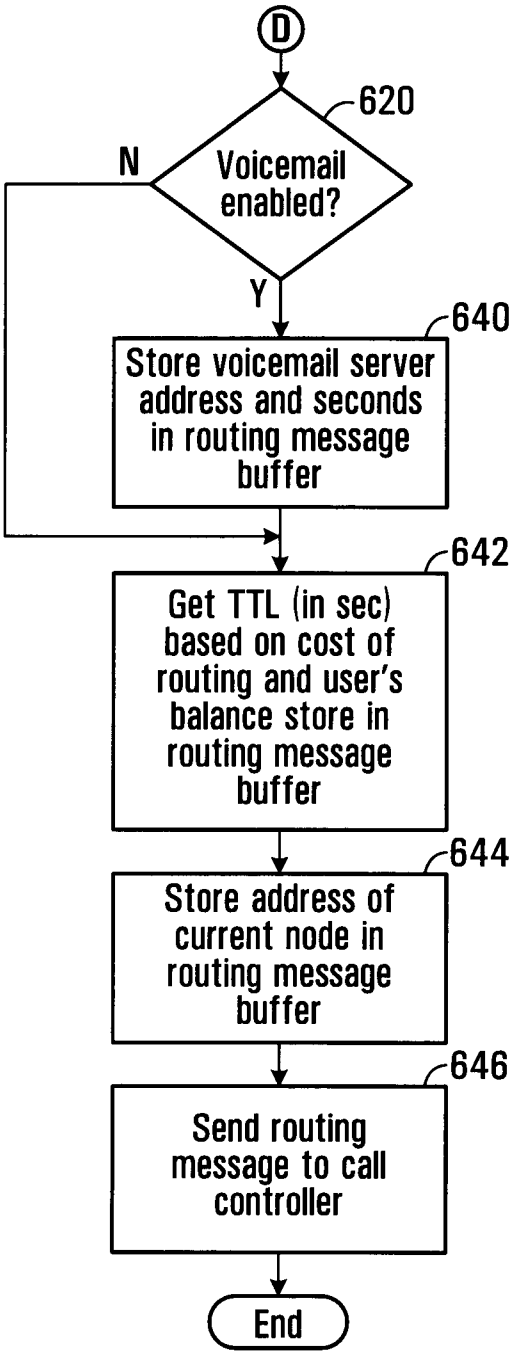
D
620
Voicemail enabled?
N
Y
640
Store voicemail server address and seconds in routing message buffer
642
Get TTL (in sec) based on cost of routing and user's balance store in routing message buffer
644
Store address of current node in routing message buffer
646
Send routing message to call controller
End

FIG. 8C

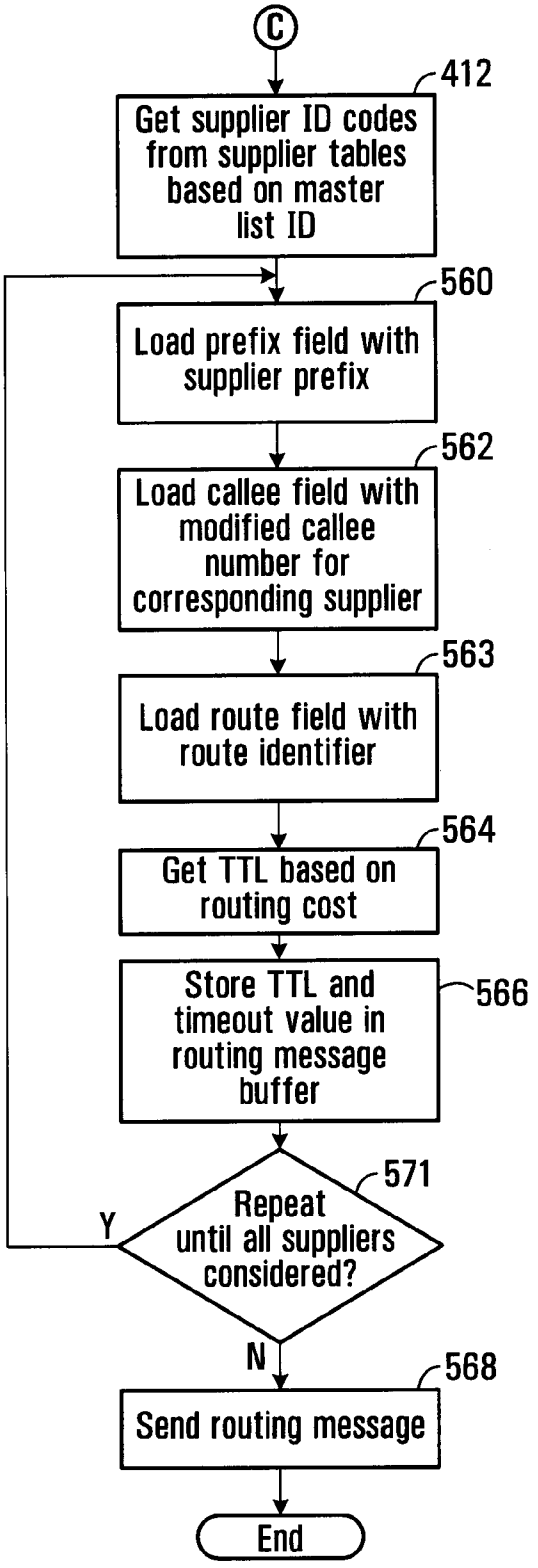
C
412
Get supplier ID codes from supplier tables based on master list ID
560
Load prefix field with supplier prefix
562
Load callee field with modified callee number for corresponding supplier
563
Load route field with route identifier
564
Get TTL based on routing cost
566
Store TTL and timeout value in routing message buffer
571
Repeat until all suppliers considered?
Y
N
568
Send routing message
End

FIG. 8D

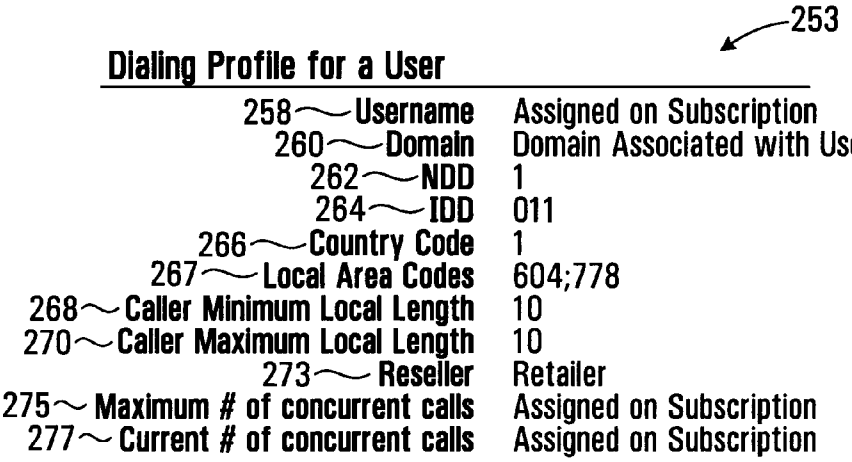
253
Dialing Profile for a User
258 Username
Assigned on Subscription
260 Domain
Domain Associated with User
262 NDD
1
264 IDD
011
266 Country Code
1
267 Local Area Codes
604;778
268 Caller Minimum Local Length
10
270 Caller Maximum Local Length
10
273 Reseller
Retailer
275 Maximum # of concurrent calls
Assigned on Subscription
277 Current # of concurrent calls
Assigned on Subscription

FIG. 9

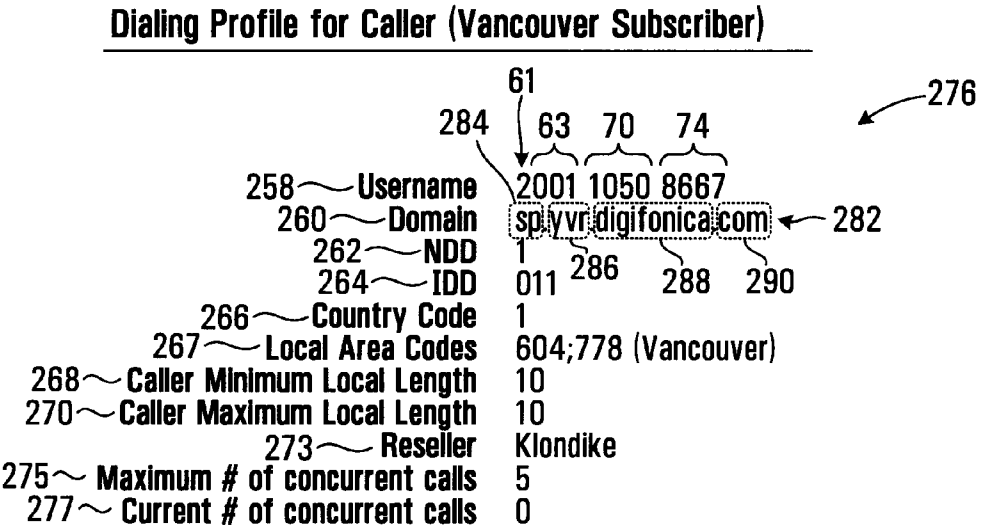
Dialing Profile for Caller (Vancouver Subscriber)
276
61
284
63
70
74
258 Username
2001 1050 8667
260 Domain
sp.yvr.digifonica.com
282
262 NDD
1
264 IDD
011
286
288
290
266 Country Code
1
267 Local Area Codes
604;778 (Vancouver)
268 Caller Minimum Local Length
10
270 Caller Maximum Local Length
10
273 Reseller
Klondike
275 Maximum # of concurrent calls
5
277 Current # of concurrent calls
0

FIG. 10

**Callee Profile for Calgary Subscriber**

| | |
|---|---|
| Username | 2001 1050 2222 |
| Domain | sp.yvr.digifonica.com |
| NDD | 1 |
| IDD | 011 |
| Country Code | 1 |
| Local Area Codes | 403 (Calgary) |
| Caller Minimum Local Length | 7 |
| Caller Maximum Local Length | 10 |
| Reseller | Deerfoot |
| Maximum # of concurrent calls | 5 |
| Current # of concurrent calls | 0 |

FIG. 11

**Callee Profile for London Subscriber**

| | |
|---|---|
| Username | 4401 1062 4444 |
| Domain | sp.lhr.digifonica.com |
| NDD | 0 |
| IDD | 00 |
| Country Code | 44 |
| Local Area Codes | 20 (London) |
| Caller Minimum Local Length | 10 |
| Caller Maximum Local Length | 11 |
| Reseller | Marble Arch |
| Maximum # of concurrent calls | 5 |
| Current # of concurrent calls | 0 |

FIG. 12

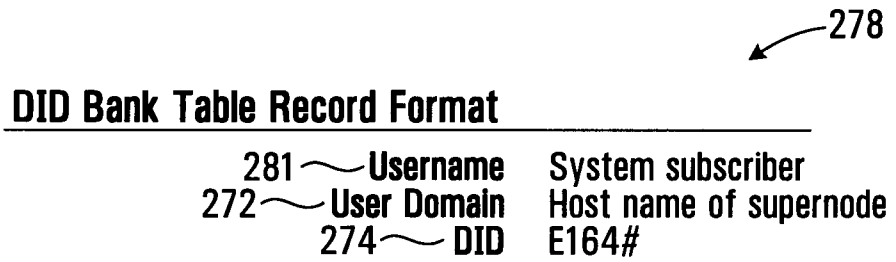
278
DID Bank Table Record Format
281 Username System subscriber
272 User Domain Host name of supernode
274 DID E164#

FIG. 13

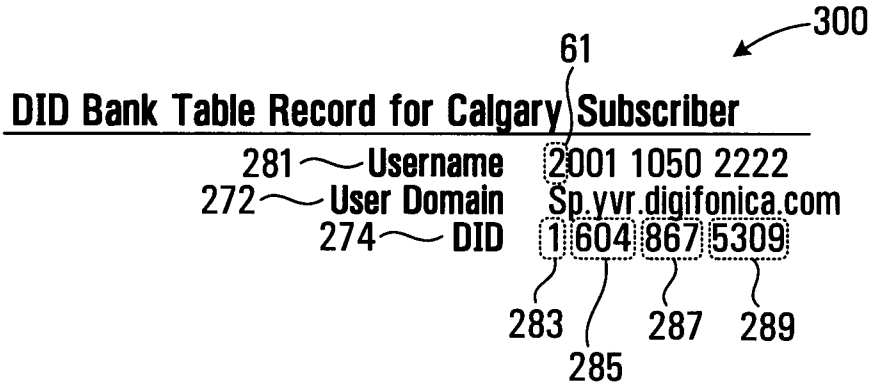
300
61
DID Bank Table Record for Calgary Subscriber
281 Username 2001 1050 2222
272 User Domain Sp.yvr.digifonica.com
274 DID 1 604 867 5309
283
285
287
289

FIG. 14

352

**Routing Message Format**

| | | |
|---|---|---|
| 354 | Supplier Prefix (optional) | Code identifying supplier traffic |
| 356 | Delimiter (optional) | Symbol separating fields |
| 358 | Callee | PSTN compatible number or Digifonica number |
| 360 | Route | Domain name or IP address |
| 362 | Time to Live(TTL) | In seconds |
| 364 | Other | TBD |

FIG. 15

366

**Example of Routing Message - Different Node**

4401106244444@sp.lhr.digifonica.com;ttl=9999

359 361 363

FIG. 16

370

**Prefix to Supernode Table Record Format**

| | | |
|---|---|---|
| 372 | Prefix | First n digits of callee identifier |
| 374 | Supernode Address | IP address or fully qualified domain name |

FIG. 17

**Prefix to Supernode Table Record for Calgary Subscriber**

| | |
|---|---|
| Prefix | 20 |
| Supernode Address | sp.yvr.digifonica.com |

FIG. 18

**Master List Record Format**

| | | |
|---|---|---|
| 500 | ml_id | Alphanumeric |
| 502 | Dialing code | Number Sequence |
| 504 | Country code | The country code is the national prefix to be used when dialing TO a particular country FROM another country. |
| 506 | Nat Sign #(Area Code) | Number Sequence |
| 508 | Min Length | Numeric |
| 510 | Max Length | Numeric |
| 512 | NDD | The NDD prefix is the access code used to make a call **WITHIN** that country from one city to another (when calling another city in the same vicinity, this may not be necessary). |
| 514 | IDD | The **IDD prefix** is the international prefix needed to dial a call **FROM** the country listed **TO** another country. |
| 516 | Buffer rate | Safe change rate above the highest rate charged by suppliers |

FIG. 19

**Example: Master List Record with Populated Fields**

| | |
|---|---|
| ml_id | 1019 |
| Dialing code | 1604 |
| Country code | 1 |
| Nat Sign #(Area Code) | 604 |
| Min Length | 7 |
| Max Length | 7 |
| NDD | 1 |
| IDD | 011 |
| Buffer rate | $0.009/min |

FIG. 20

**Suppliers List Record Format**

| | | |
|---|---|---|
| 540 | Sup_id | Name code |
| 542 | MI_id | Numeric code |
| 544 | Prefix (optional) | String identifying supplier's traffic # |
| 546 | Specific Route | IP address |
| 548 | NDD/IDD rewrite | |
| 550 | Rate | Cost per second to Digifonica to use this route |
| 551 | Timeout | Maximum time to wait for a response when requesting this gateway |

FIG. 21

**Telus Supplier Record**

| | |
|---|---|
| Sup_id | 2010 (Telus) |
| MI_id | 1019 |
| Prefix (optional) | 4973# |
| Specific Route | 72.64.39.58 |
| NDD/IDD rewrite | 011 |
| Rate | $0.02/min |
| Timeout | 20 |

FIG. 22

**Shaw Supplier Record**

| | |
|---|---|
| Sup_id | 2011 (Shaw) |
| MI_id | 1019 |
| Prefix (optional) | 4974# |
| Specific Route | 73.65.40.59 |
| NDD/IDD rewrite | 011 |
| Rate | $0.025/min |
| Timeout | 30 |

FIG. 23

**Sprint Supplier Record**

| | |
|---|---|
| Sup_id | 2012 (Sprint) |
| MI_id | 1019 |
| Prefix (optional) | 4975# |
| Specific Route | 74.66.41.60 |
| NDD/IDD rewrite | 011 |
| Rate | $0.03/min |
| Timeout | 40 |

FIG. 24

**Routing Message Buffer for Gateway Call**

4973#0116048675309@72.64.39.58;ttl=3600;to=20 ~570
4974#0116048675309@73.65.40.59;ttl=3600;to=30 ~572
4975#0116048675309@74.66.41.60;ttl=3600;to=40 ~574

FIG. 25

**Call Block Table Record Format**

| | | |
|---|---|---|
| 604 ~ | Username | Digifonica # |
| 606 ~ | Block Pattern | PSTN compatible or Digifonica # |

FIG. 26

**Call Block Table Record for Calgary Callee**

| | | |
|---|---|---|
| 604 ~ | Username of Callee | 2001 1050 2222 |
| 606 ~ | Block Pattern | 2001 1050 8664 |

FIG. 27

**Call Forwarding Table Record Format for Callee**

| | | |
|---|---|---|
| 614 ~ | Username of Callee | Digifonica # |
| 616 ~ | Destination Number | Digifonica # |
| 618 ~ | Sequence Number | Integer indicating order to try this |

FIG. 28

**Call Forwarding Table Record for Calgary Callee**

| | | |
|---|---|---|
| 614 ~ | Username of Callee | 2001 1050 2222 |
| 616 ~ | Destination Number | 2001 1055 2223 |
| 618 ~ | Sequence Number | 1 |

FIG. 29

**Voicemail Table Record Format**

| | | |
|---|---|---|
| 624 | Username of Callee | Digifonica # |
| 626 | Vm Server | domain name |
| 628 | Seconds to Voicemail | time to wait before engaging voicemail |
| 630 | Enabled | yes/no |

FIG. 30

**Voicemail Table Record for Calgary Callee**

| | |
|---|---|
| Username of Callee | 2001 1050 2222 |
| Vm Server | vm.yvr.digifonica.com |
| Seconds to Voicemail | 20 |
| Enabled | 1 |

FIG. 31

**Routing Message Buffer - Same Node**

650 ~ 200110502222@sp.yvr.digifonica.com;ttl=3600
652 ~ 200110552223@sp.yvr.digifonica.com;ttl=3600
654 ~ vm.yvr.digifonica.com;20;ttl=60
656 ~ sp.yvr.digifonica.com

FIG. 32

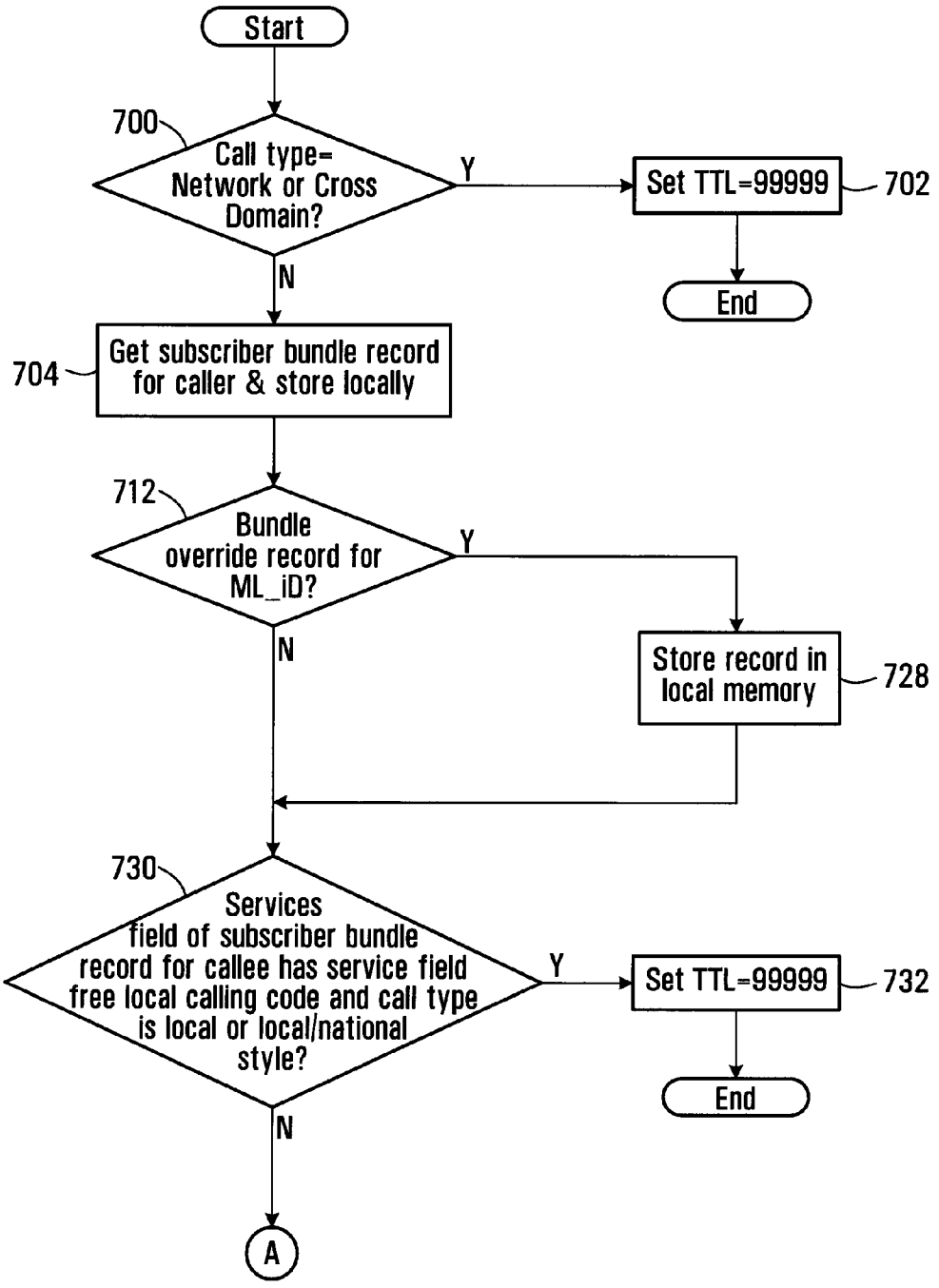
Start
700
Call type= Network or Cross Domain?
Y
Set TTL=99999
702
End
N
704
Get subscriber bundle record for caller & store locally
712
Bundle override record for ML_iD?
Y
Store record in local memory
728
N
730
Services field of subscriber bundle record for callee has service field free local calling code and call type is local or local/national style?
Y
Set TTL=99999
732
End
N
A

FIG. 33A

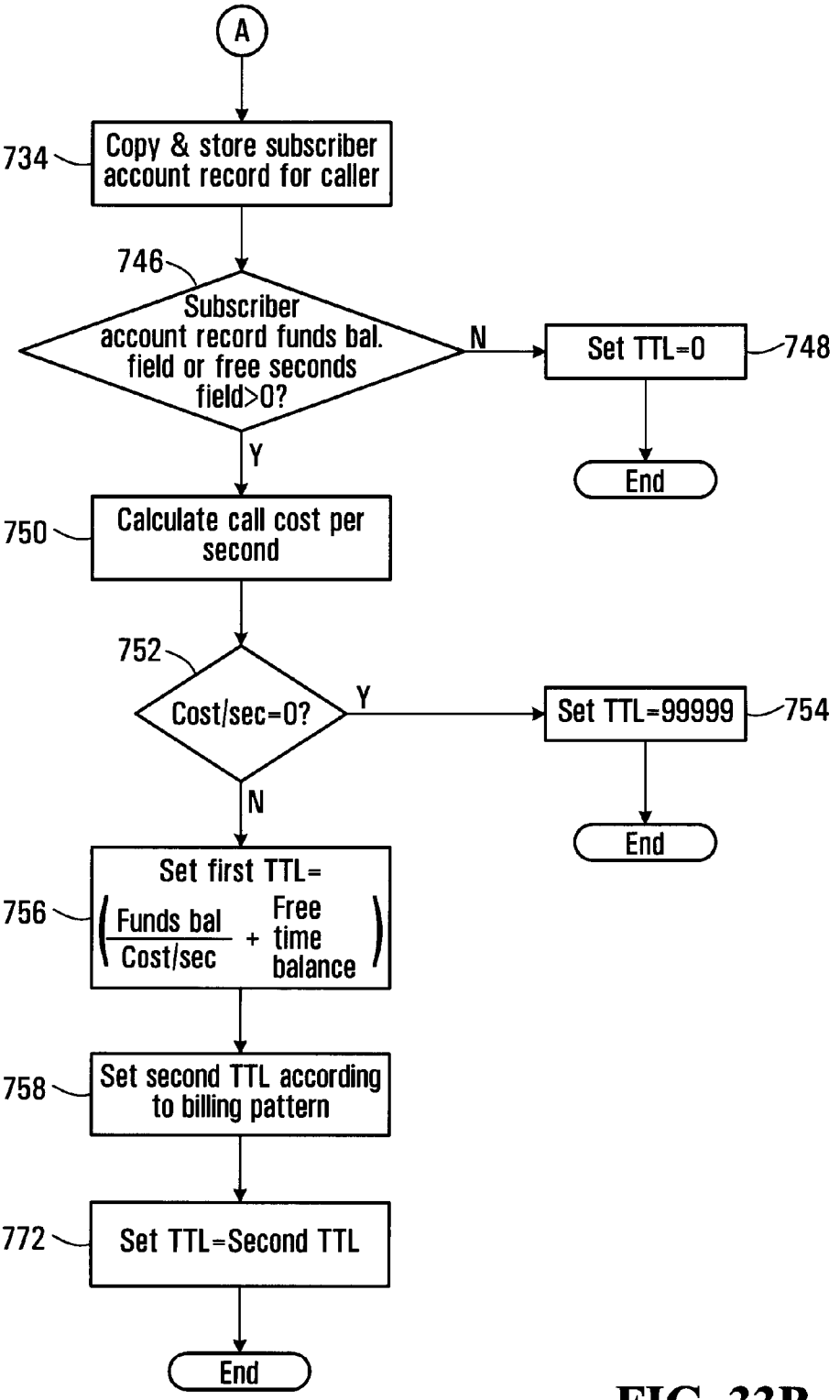
A
734
Copy & store subscriber account record for caller
746
Subscriber account record funds bal. field or free seconds field>0?
N
Set TTL=0
748
End
Y
750
Calculate call cost per second
752
Cost/sec=0?
Y
Set TTL=99999
754
End
N
756
Set first TTL= (Funds bal / Cost/sec + Free time balance)
758
Set second TTL according to billing pattern
772
Set TTL=Second TTL
End

FIG. 33B

706

**Subscriber Bundle Table Record**

| | | |
|---|---|---|
| 708 | Username | Subscriber username |
| 710 | Services | Codes identifying service features (e.g. Free local calling; call blocking, voicemail) |

FIG. 34

**Subscriber Bundle Record for Vancouver Caller**

| | | |
|---|---|---|
| 708 | Username | 2001 1050 8667 |
| 710 | Services | 10; 14; 16 |

FIG. 35

714

**Bundle Override Table Record**

| | | |
|---|---|---|
| 716 | ML_Id | Master list ID code |
| 718 | Override type | Fixed; percent; cents |
| 720 | Override value | real number representing value of override type |
| 722 | Inc1 | first level of charging (minimum # of seconds) charge |
| 724 | Inc2 | second level of charging |

FIG. 36

726

**Bundle Override Record for Located ML_iD**

| | | |
|---|---|---|
| 716 | ML_Id | 1019 |
| 718 | Override type | percent |
| 720 | Override value | 10.0 |
| 722 | Inc1 | 30 seconds |
| 724 | Inc2 | 6 seconds |

FIG. 37

736

**Subscriber Account Table Record**

| | | |
|---|---|---|
| 738 | Username | Subscriber username |
| 740 | Funds balance | real number representing $ value of credit |
| 742 | Free time balance | integer representing # of free seconds |

FIG. 38

744

**Subscriber Account Record for Vancouver Caller**

| | | |
|---|---|---|
| 738 | Username | 2001 1050 8667 |
| 740 | Funds balance | $10.00 |
| 742 | Free time balance | 100 |

FIG. 39

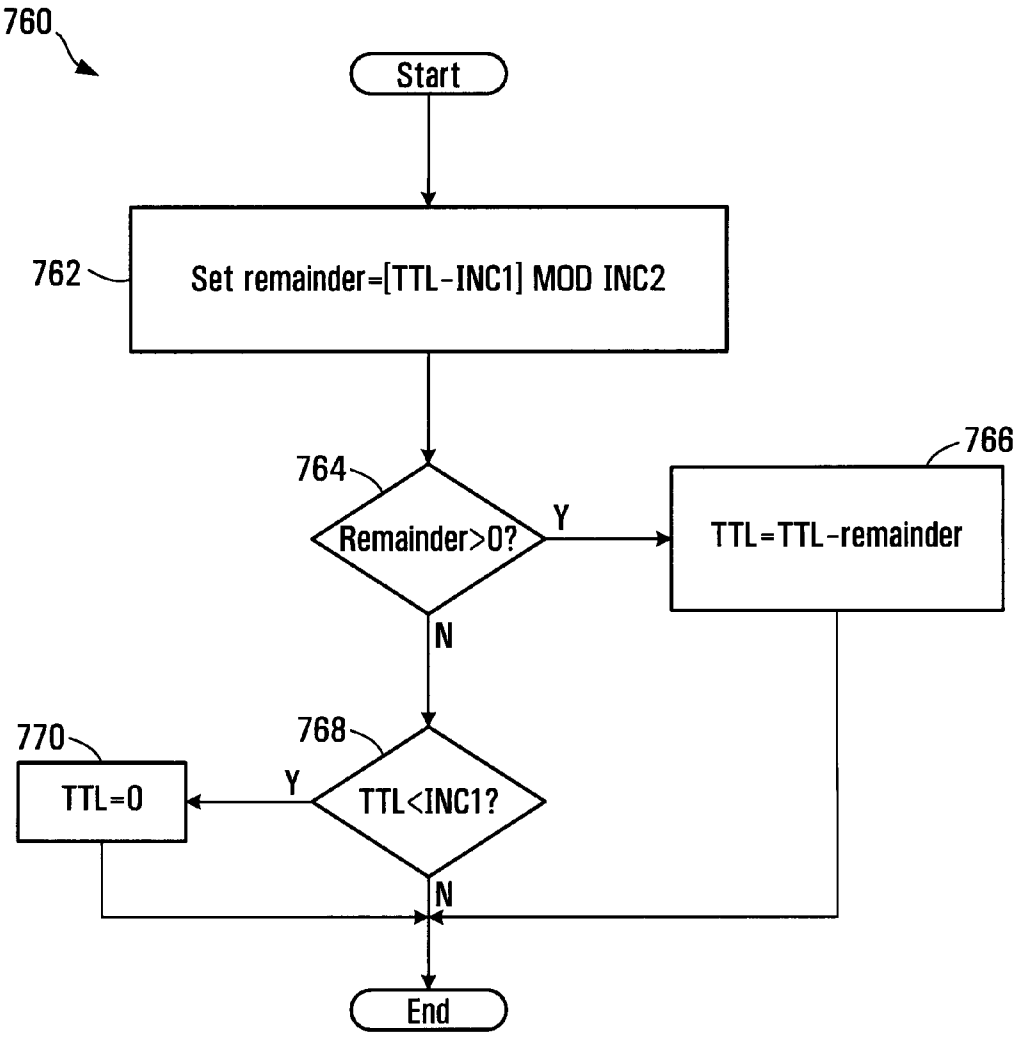
760
Start
762
Set remainder=[TTL-INC1] MOD INC2
764
Remainder>0?
Y
766
TTL=TTL-remainder
N
768
TTL<INC1?
Y
770
TTL=0
N
End

FIG. 40

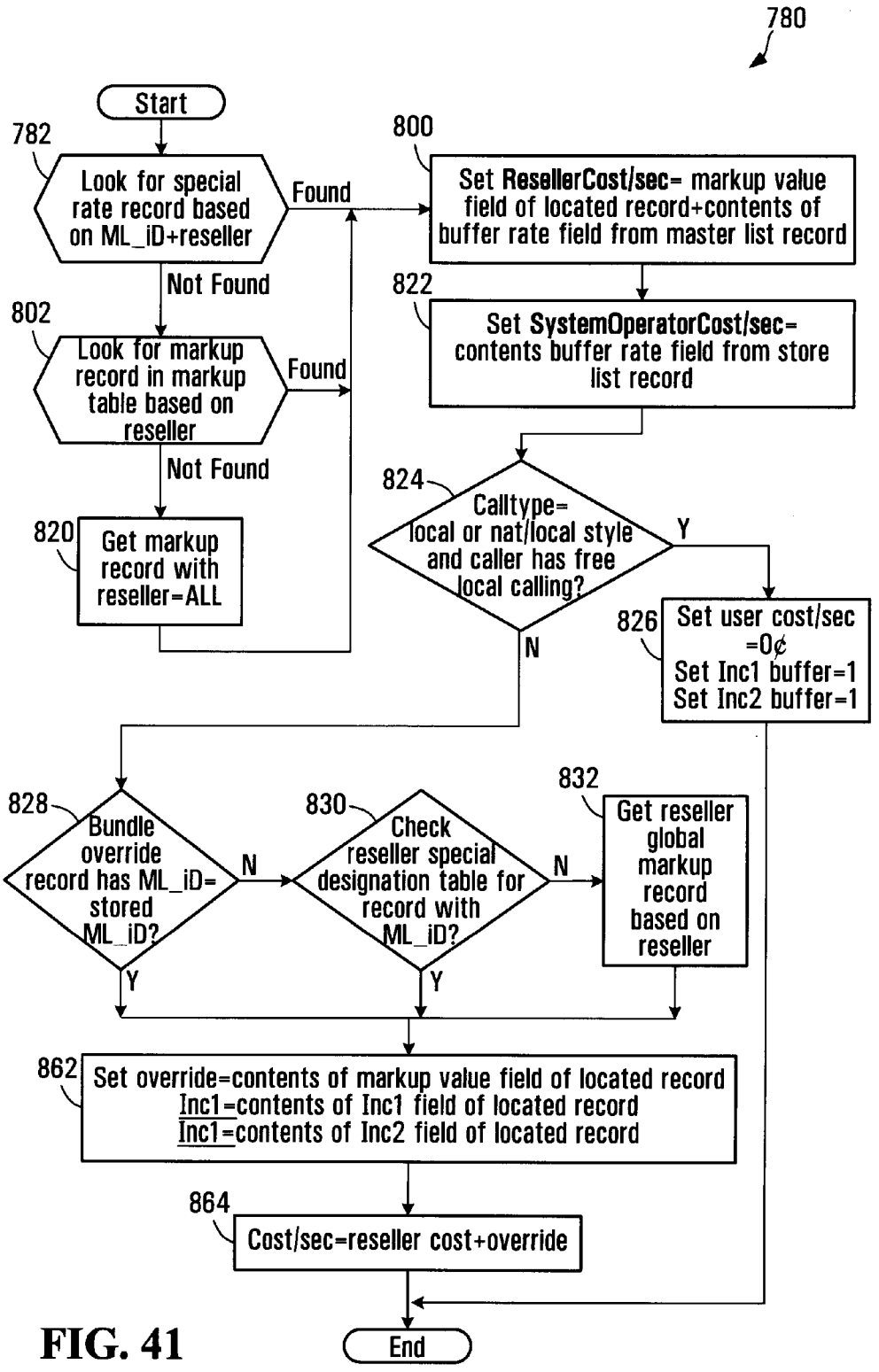
780
Start
782
Look for special rate record based on ML_iD+reseller
Found
Not Found
802
Look for markup record in markup table based on reseller
Found
Not Found
820
Get markup record with reseller=ALL
800
Set ResellerCost/sec= markup value field of located record+contents of buffer rate field from master list record
822
Set SystemOperatorCost/sec= contents buffer rate field from store list record
824
Calltype= local or nat/local style and caller has free local calling?
Y
N
826
Set user cost/sec =0¢
Set Inc1 buffer=1
Set Inc2 buffer=1
828
Bundle override record has ML_iD= stored ML_iD?
N
Y
830
Check reseller special designation table for record with ML_iD?
N
Y
832
Get reseller global markup record based on reseller
862
Set override=contents of markup value field of located record
Inc1=contents of Inc1 field of located record
Inc1=contents of Inc2 field of located record
864
Cost/sec=reseller cost+override
End

FIG. 41

784
System Operator Special Rates Table Record
786 Reseller retailer id
788 ML_Id master list id
790 Markup Table fixed; percent; cents
792 Markup Value real number representing value of markup type
794 Inc1 first level of charging (minimum # of seconds) charge
796 Inc2 second level of charging

FIG. 42

798
System Operator Special Rates Table Record for Klondike
786 Reseller Klondike
788 ML_Id 1019
790 Markup Table cents
792 Markup Value $0.001
794 Inc1 30
796 Inc2 6

FIG. 43

804

**System Operator Markup Table Record**

| | | |
|---|---|---|
| 806 | Reseller | reseller id code |
| 808 | Markup Table | fixed; percent; cents |
| 810 | Markup Value | real number representing value of markup type |
| 812 | Inc1 | first level of charging (minimum # of seconds) charge |
| 814 | Inc2 | second level of charging |

FIG. 44

**System Operator Markup Table Record for the Reseller Klondike**

| | | |
|---|---|---|
| 806 | Reseller | Klondike |
| 808 | Markup Table | cents |
| 810 | Markup Value | $0.01 |
| 812 | Inc1 | 30 |
| 814 | Inc2 | 6 |

FIG. 45

**System Operator Markup Table Record**

| | | |
|---|---|---|
| 806 | Reseller | all |
| 808 | Markup Table | percent |
| 810 | Markup Value | 1.0 |
| 812 | Inc1 | 30 |
| 814 | Inc2 | 6 |

FIG. 46

832

**Reseller Special Destinations Table Record**

| | | |
|---|---|---|
| 834 | Reseller | reseller id code |
| 836 | ML_id | Master List ID code |
| 838 | Markup Table | fixed; percent; cents |
| 840 | Markup Value | real number representing value of markup type |
| 842 | Inc1 | first level of charging (minimum # of seconds) charge |
| 844 | Inc2 | second level of charging |

FIG. 47

846

**Reseller Special Destinations Table Record for the Reseller Klondike**

| | | |
|---|---|---|
| 834 | Reseller | Klondike |
| 836 | ML_id | 1019 |
| 838 | Markup Table | percent |
| 840 | Markup Value | 5% |
| 842 | Inc1 | 30 |
| 844 | Inc2 | 6 |

FIG. 48

848

**Reseller Global Markup Table Record**

| | | |
|---|---|---|
| 850 | Reseller | reseller id code |
| 852 | Markup Table | fixed; percent; cents |
| 854 | Markup Value | real number representing value of markup type |
| 856 | Inc1 | first level of charging (minimum # of seconds) charge |
| 858 | Inc2 | second level of charging |

FIG. 49

860

**Reseller Global Markup Table Record for the Reseller Klondike**

| | | |
|---|---|---|
| 850 | Reseller | Klondike |
| 852 | Markup Table | percent |
| 854 | Markup Value | 10% |
| 856 | Inc1 | 30 |
| 858 | Inc2 | 6 |

FIG. 50

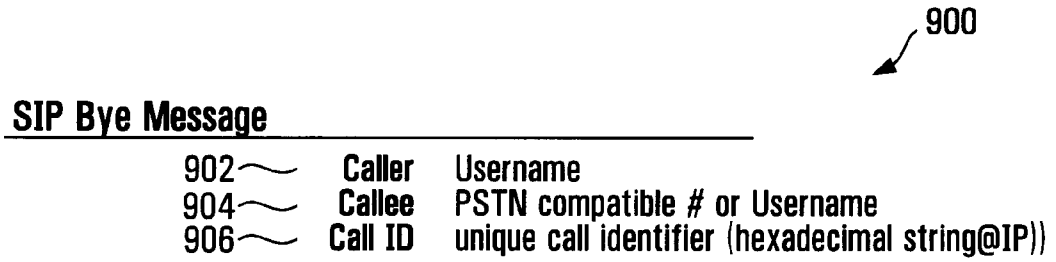
900
SIP Bye Message
902 Caller Username
904 Callee PSTN compatible # or Username
906 Call ID unique call identifier (hexadecimal string@IP))

FIG. 51

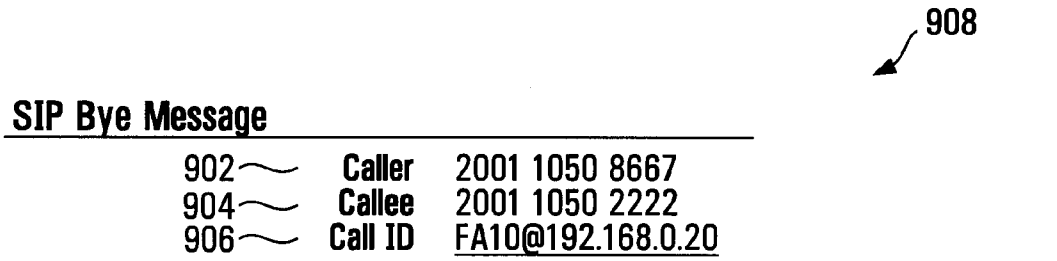
908
SIP Bye Message
902 Caller 2001 1050 8667
904 Callee 2001 1050 2222
906 Call ID FA10@192.168.0.20

FIG. 52

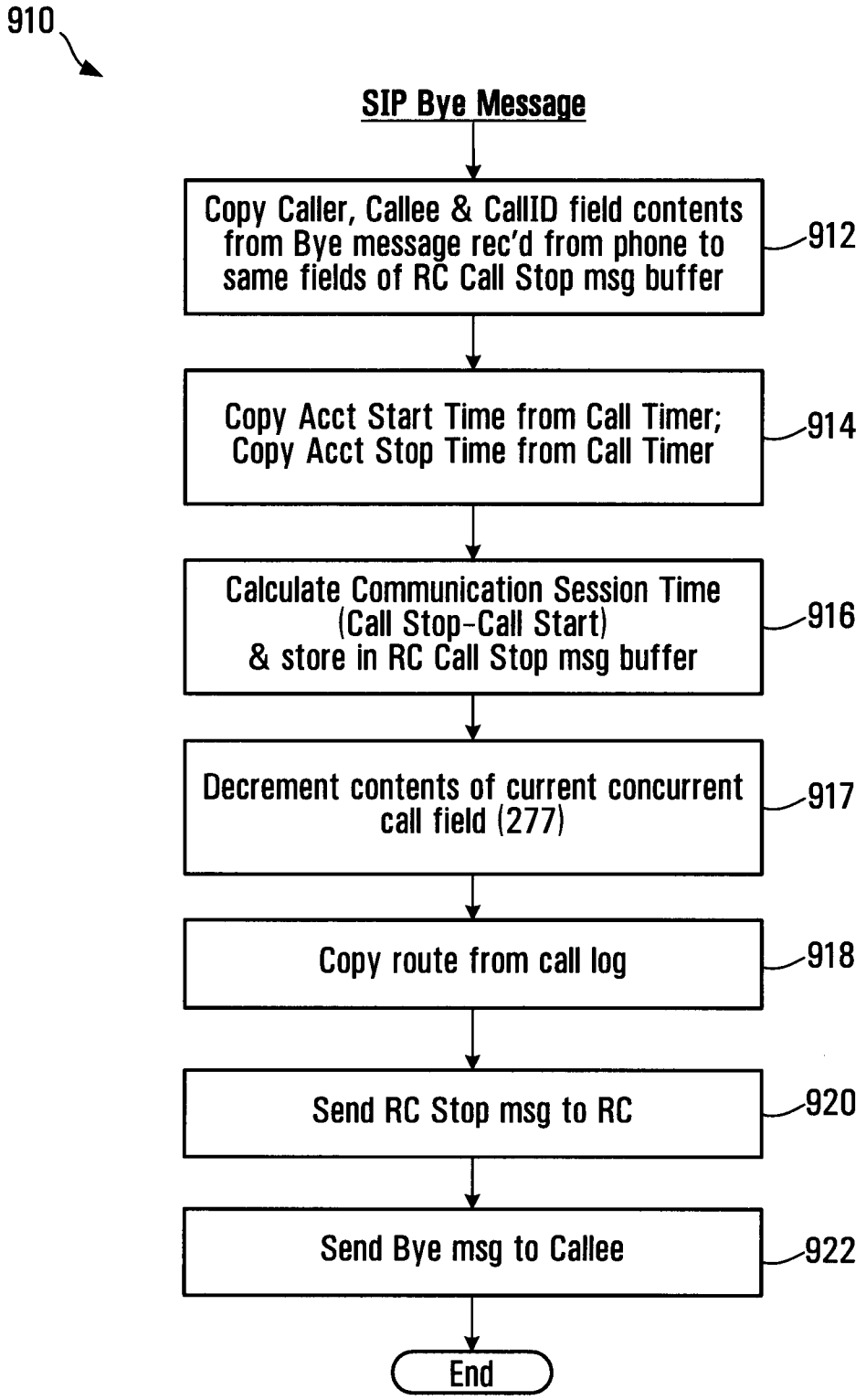
910
SIP Bye Message
Copy Caller, Callee & CallID field contents from Bye message rec'd from phone to same fields of RC Call Stop msg buffer
912
Copy Acct Start Time from Call Timer; Copy Acct Stop Time from Call Timer
914
Calculate Communication Session Time (Call Stop-Call Start) & store in RC Call Stop msg buffer
916
Decrement contents of current concurrent call field (277)
917
Copy route from call log
918
Send RC Stop msg to RC
920
Send Bye msg to Callee
922
End

FIG. 53

1000

**RC Call Stop Message**

| | | |
|---|---|---|
| 1002 | Caller | Username |
| 1004 | Callee | PSTN compatible # or Username |
| 1006 | Call ID | unique call identifier (hexadecimal string@IP) |
| 1008 | Acct Start Time | start time of call |
| 1010 | Acct Stop Time | time the call ended |
| 1012 | Acct Session Time | start time-stop time (in seconds) |
| 1014 | Route | IP address for the communications link that was established |

FIG. 54

1020

**RC Call Stop Message for Calgary Callee**

| | | |
|---|---|---|
| 1002 | Caller | 2001 1050 8667 |
| 1004 | Callee | 2001 1050 2222 |
| 1006 | Call ID | FA10@192.168.0.20 |
| 1008 | Acct Start Time | 2006-12-30 12:12:12 |
| 1010 | Acct Stop Time | 2006-12-30 12:12:14 |
| 1012 | Acct Session Time | 2 |
| 1014 | Route | 72.64.39.58 |

FIG. 55

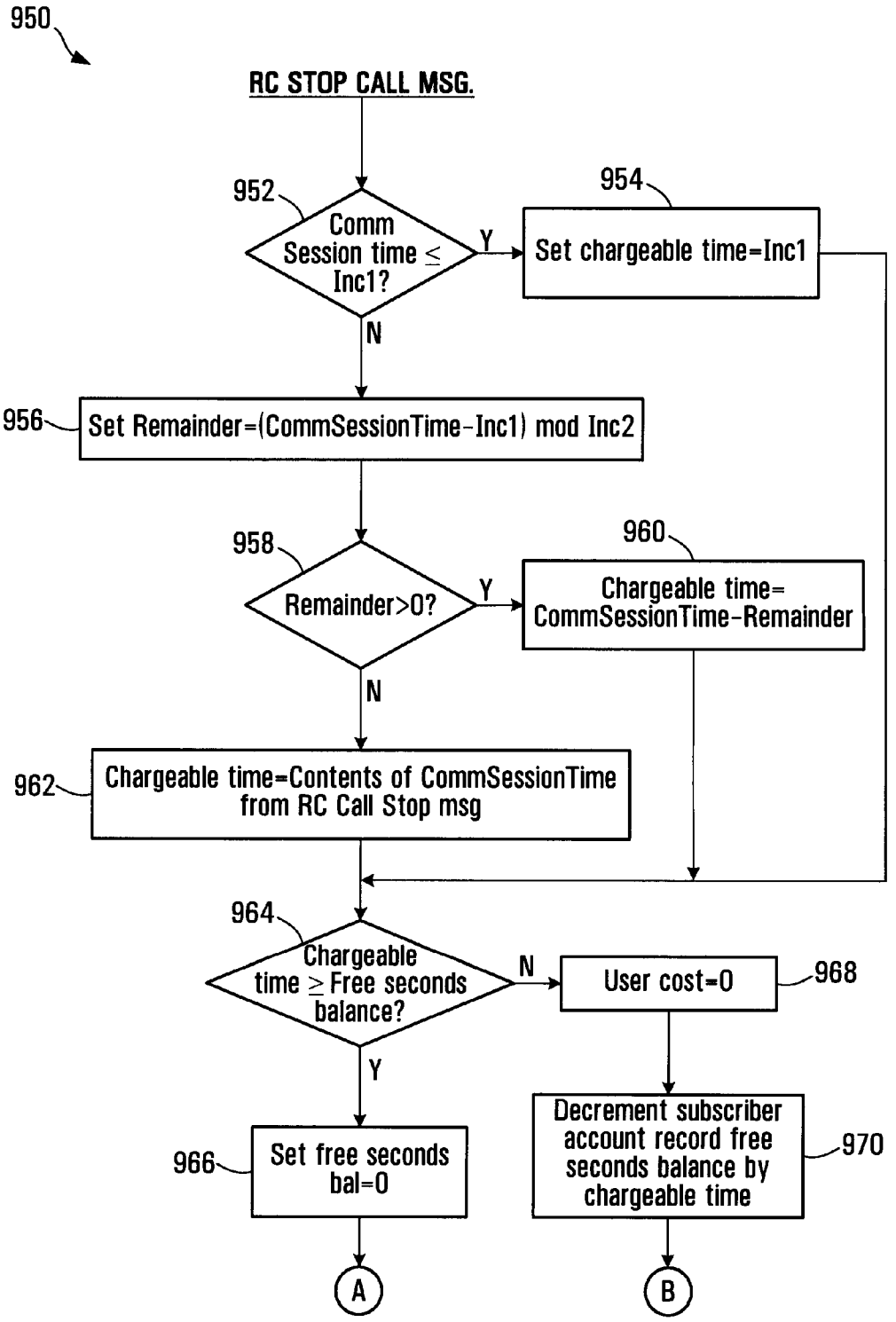
950
RC STOP CALL MSG.
952
Comm Session time ≤ Inc1?
Y
954
Set chargeable time=Inc1
N
956
Set Remainder=(CommSessionTime-Inc1) mod Inc2
958
Remainder>0?
Y
960
Chargeable time= CommSessionTime-Remainder
N
962
Chargeable time=Contents of CommSessionTime from RC Call Stop msg
964
Chargeable time ≥ Free seconds balance?
N
User cost=0
968
Y
966
Set free seconds bal=0
Decrement subscriber account record free seconds balance by chargeable time
970
A
B

FIG. 56A

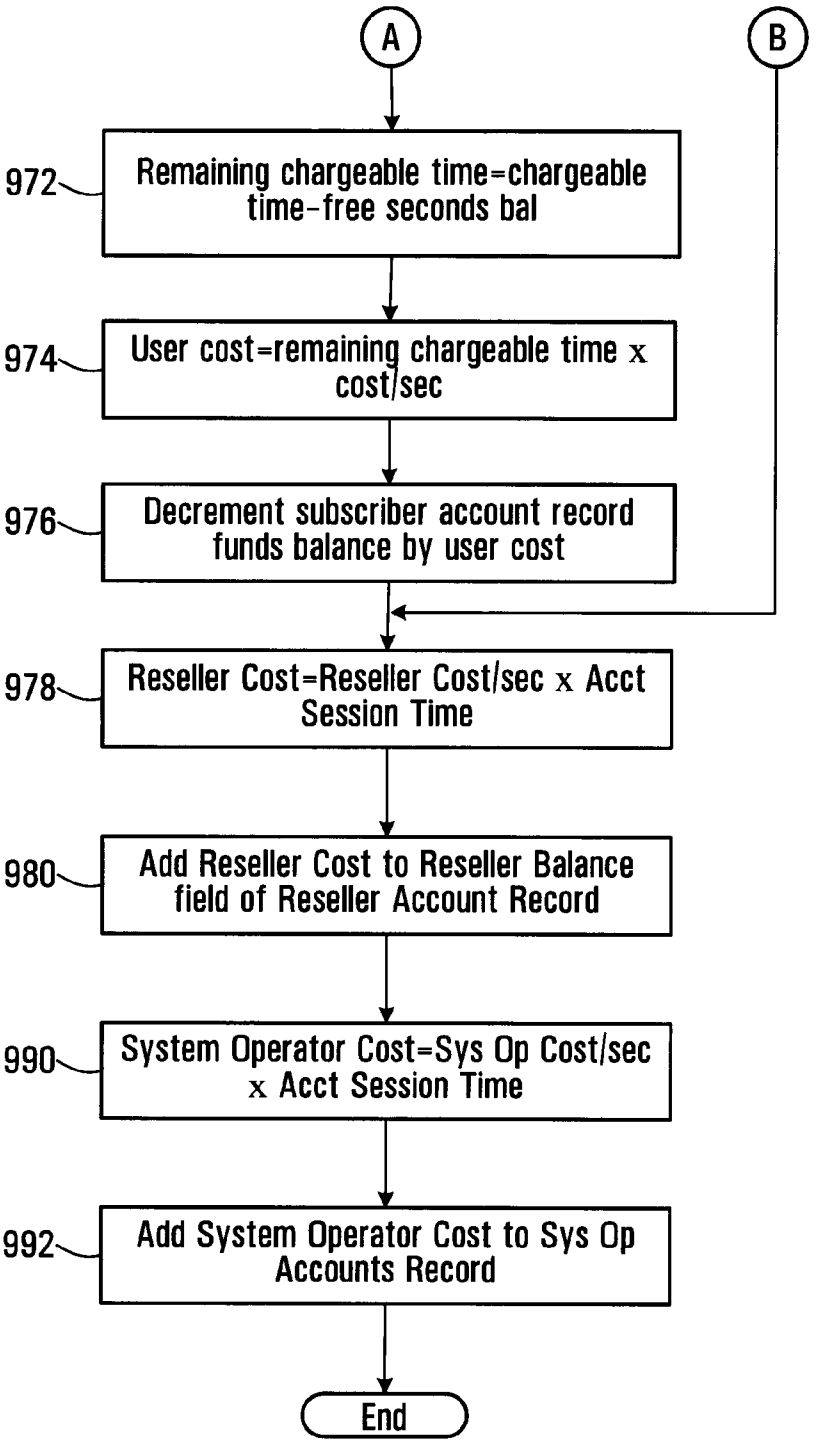
A
B
972
Remaining chargeable time=chargeable time-free seconds bal
974
User cost=remaining chargeable time x cost/sec
976
Decrement subscriber account record funds balance by user cost
978
Reseller Cost=Reseller Cost/sec x Acct Session Time
980
Add Reseller Cost to Reseller Balance field of Reseller Account Record
990
System Operator Cost=Sys Op Cost/sec x Acct Session Time
992
Add System Operator Cost to Sys Op Accounts Record
End

FIG. 56B

982

**Reseller Accounts Table Record**

| | | |
|---|---|---|
| 984 | **Reseller ID** | reseller id code |
| 986 | **Reseller balance** | accumulated balance of charges |

FIG. 57

988

**Reseller Accounts Table Record for Klondike**

| | | |
|---|---|---|
| 984 | **Reseller ID** | Klondike |
| 986 | **Reseller balance** | $100.02 |

FIG. 58

994

**System Operator Accounts Table Record**

| | | |
|---|---|---|
| 996 | **System Operator balance** | accumulated balance of charges |

FIG. 59

**System Operator Accounts Record for this System Operator**

| | | |
|---|---|---|
| 996 | **System Operator balance** | $1000.02 |

FIG. 60

# PRODUCING ROUTING MESSAGES FOR VOICE OVER IP COMMUNICATIONS

This application is a national phase entry of PCT/CA2007/001956, filed Nov. 1, 2007, which claims priority to U.S. Provisional Application No. 60/856,212, filed Nov. 2, 2006, both of which are incorporated in their entirety.

## BACKGROUND OF THE INVENTION

1. Field of Invention

This invention relates to voice over IP communications and methods and apparatus for routing and billing.

2. Description of Related Art

Internet protocol (IP) telephones are typically personal computer (PC) based telephones connected within an IP network, such as the public Internet or a private network of a large organization. These IP telephones have installed "voice-over-IP" (VoIP) software enabling them to make and receive voice calls and send and receive information in data and video formats.

IP telephony switches installed within the IP network enable voice calls to be made within or between IP networks, and between an IP network and a switched circuit network (SCN), such as the public switched telephone network (PSTN). If the IP switch supports the Signaling System 7 (SS7) protocol, the IP telephone can also access PSTN databases.

The PSTN network typically includes complex network nodes that contain all information about a local calling service area including user authentication and call routing. The PSTN network typically aggregates all information and traffic into a single location or node, processes it locally and then passes it on to other network nodes, as necessary, by maintaining route tables at the node. PSTN nodes are redundant by design and thus provide reliable service, but if a node should fail due to an earthquake or other natural disaster, significant, if not complete service outages can occur, with no other nodes being able to take up the load.

Existing VoIP systems do not allow for high availability and resiliency in delivering Voice Over IP based Session Initiation Protocol (SIP) Protocol service over a geographically dispersed area such as a city, region or continent. Most resiliency originates from the provision of IP based telephone services to one location or a small number of locations such as a single office or network of branch offices.

## SUMMARY OF THE INVENTION

In accordance with one aspect of the invention, there is provided a process for operating a call routing controller to facilitate communication between callers and callees in a system comprising a plurality of nodes with which callers and callees are associated. The process involves, in response to initiation of a call by a calling subscriber, receiving a caller identifier and a callee identifier. The process also involves using call classification criteria associated with the caller identifier to classify the call as a public network call or a private network call. The process further involves producing a routing message identifying an address, on the private network, associated with the callee when the call is classified as a private network call. The process also involves producing a routing message identifying a gateway to the public network when the call is classified as a public network call.

The process may involve receiving a request to establish a call, from a call controller in communication with a caller identified by the callee identifier.



Using the call classification criteria may involve searching a database to locate a record identifying calling attributes associated with a caller identified by the caller identifier.

Locating a record may involve locating a caller dialing profile comprising a username associated with the caller, a domain associated with the caller, and at least one calling attribute.

Using the call classification criteria may involve comparing calling attributes associated with the caller dialing profile with aspects of the callee identifier.

Comparing may involve determining whether the callee identifier includes a portion that matches an IDD associated with the caller dialing profile.

Comparing may involve determining whether the callee identifier includes a portion that matches an NDD associated with the caller dialing profile.

Comparing may involve determining whether the callee identifier includes a portion that matches an area code associated with the caller dialing profile.

Comparing may involve determining whether the callee identifier has a length within a range specified in the caller dialing profile.

The process may involve formatting the callee identifier into a pre-defined digit format to produce a re-formatted callee identifier.

Formatting may involve removing an international dialing digit from the callee identifier, when the callee identifier begins with a digit matching an international dialing digit specified by the caller dialing profile associated with the caller.

Formatting may involve removing a national dialing digit from the callee identifier and prepending a caller country code to the callee identifier when the callee identifier begins with a national dialing digit.

Formatting may involve prepending a caller country code to the callee identifier when the callee identifier begins with digits identifying an area code specified by the caller dialing profile.

Formatting may involve prepending a caller country code and an area code to the callee identifier when the callee identifier has a length that matches a caller dialing number format specified by the caller dialing profile and only one area code is specified as being associated with the caller in the caller dialing profile.

The process may involve classifying the call as a private network call when the re-formatted callee identifier identifies a subscriber to the private network.

The process may involve determining whether the callee identifier complies with a pre-defined username format and if so, classifying the call as a private network call.

The process may involve causing a database of records to be searched to locate a direct in dial (DID) bank table record associating a public telephone number with the reformatted callee identifier and if the DID bank table record is found, classifying the call as a private network call and if a DID bank table record is not found, classifying the call as a public network call.

Producing the routing message identifying a node on the private network may involve setting a callee identifier in response to a username associated with the DID bank table record.

Producing the routing message may involve determining whether a node associated with the reformatted callee identifier is the same as a node associated the caller identifier.

Determining whether a node associated with the reformatted callee identifier is the same as a node associated the caller identifier may involve determining whether a prefix of the

re-formatted callee identifier matches a corresponding prefix of a username associated with the caller dialing profile.

When the node associated with the caller is not the same as the node associated with the callee, the process involves producing a routing message including the caller identifier, the reformatted callee identifier and an identification of a private network node associated with the callee and communicating the routing message to a call controller.

When the node associated with the caller is the same as the node associated with the callee, the process involves determining whether to perform at least one of the following: forward the call to another party, block the call and direct the caller to a voicemail server associated with the callee.

Producing the routing message may involve producing a routing message having an identification of at least one of the callee identifier, an identification of a party to whom the call should be forwarded and an identification of a voicemail server associated with the callee.

The process may involve communicating the routing message to a call controller.

Producing a routing message identifying a gateway to the public network may involve searching a database of route records associating route identifiers with dialing codes to find a route record having a dialing code having a number pattern matching at least a portion of the reformatted callee identifier.

The process may involve searching a database of supplier records associating supplier identifiers with the route identifiers to locate at least one supplier record associated with the route identifier associated with the route record having a dialing code having a number pattern matching at least a portion of the reformatted callee identifier.

The process may involve loading a routing message buffer with the reformatted callee identifier and an identification of specific routes associated respective ones of the supplier records associated with the route record and loading the routing message buffer with a time value and a timeout value.

The process may involve communicating a routing message involving the contents of the routing message buffer to a call controller.

The process may involve causing the dialing profile to include a maximum concurrent call value and a concurrent call count value and causing the concurrent call count value to be incremented when the user associated with the dialing profile initiates a call and causing the concurrent call count value to be decremented when a call with the user associated with the dialing profile is ended.

In accordance with another aspect of the invention, there is provided a call routing apparatus for facilitating communications between callers and callees in a system comprising a plurality of nodes with which callers and callees are associated. The apparatus includes receiving provisions for receiving a caller identifier and a callee identifier, in response to initiation of a call by a calling subscriber. The apparatus also includes classifying provisions for classifying the call as a private network cal or a public network call according to call classification criteria associated with the caller identifier. The apparatus further includes provisions for producing a routing message identifying an address, on the private network, associated with the callee when the call is classified as a private network call. The apparatus also includes provisions for producing a routing message identifying a gateway to the public network when the call is classified as a public network call.

The receiving provisions may be operably configured to receive a request to establish a call, from a call controller in communication with a caller identified by the callee identifier.

The apparatus may further include searching provisions for searching a database including records associating calling attributes with subscribers to the private network to locate a record identifying calling attributes associated with a caller identified by the caller identifier.

The records may include dialing profiles each including a username associated with the subscriber, an identification of a domain associated with the subscriber, and an identification of at least one calling attribute associated with the subscriber.

The call classification provisions may be operably configured to compare calling attributes associated with the caller dialing profile with aspects of the callee identifier.

The calling attributes may include an international dialing digit and call classification provisions may be operably configured to determine whether the callee identifier includes a portion that matches an IDD associated with the caller dialing profile.

The calling attributes may include an national dialing digit and the call classification provisions may be operably configured to determine whether the callee identifier includes a portion that matches an NDD associated with the caller dialing profile.

The calling attributes may include an area code and the call classification provisions may be operably configured to determine whether the callee identifier includes a portion that matches an area code associated with the caller dialing profile.

The calling attribute may include a number length range and the call classification provisions may be operably configured to determine whether the callee identifier has a length within a number length range specified in the caller dialing profile.

The apparatus may further include formatting provisions for formatting the callee identifier into a pre-defined digit format to produce a re-formatted callee identifier.

The formatting provisions may be operably configured to remove an international dialing digit from the callee identifier, when the callee identifier begins with a digit matching an international dialing digit specified by the caller dialing profile associated with the caller.

The formatting provisions may be operably configured to remove a national dialing digit from the callee identifier and prepend a caller country code to the callee identifier when the callee identifier begins with a national dialing digit.

The formatting provisions may be operably configured to prepend a caller country code to the callee identifier when the callee identifier begins with digits identifying an area code specified by the caller dialing profile.

The formatting provisions may be operably configured to prepend a caller country code and area code to the callee identifier when the callee identifier has a length that matches a caller dialing number format specified by the caller dialing profile and only one area code is specified as being associated with the caller in the caller dialing profile.

The classifying provisions may be operably configured to classify the call as a private network call when the re-formatted callee identifier identifies a subscriber to the private network.

The classifying provisions may be operably configured to classify the call as a private network call when the callee identifier complies with a pre-defined username format.

The apparatus may further include searching provisions for searching a database of records to locate a direct in dial (DID) bank table record associating a public telephone number with the reformatted callee identifier and the classifying provisions may be operably configured to classify the call as a private network call when the DID bank table record is found and to classify the call as a public network call when a DID bank table record is not found

The private network routing message producing provisions may be operably configured to produce a routing message having a callee identifier set according to a username associated with the DID bank table record.

The private network routing message producing provisions may be operably configured to determine whether a node associated with the reformatted callee identifier is the same as a node associated the caller identifier.

The private network routing provisions may include provisions for determining whether a prefix of the re-formatted callee identifier matches a corresponding prefix of a username associated with the caller dialing profile.

The private network routing message producing provisions may be operably configured to produce a routing message including the caller identifier, the reformatted callee identifier and an identification of a private network node associated with the callee and to communicate the routing message to a call controller.

The private network routing message producing provisions may be operably configured to perform at least one of the following forward the call to another party, block the call and direct the caller to a voicemail server associated with the callee, when the node associated with the caller is the same as the node associated with the callee.

The provisions for producing the private network routing message may be operably configured to produce a routing message having an identification of at least one of the callee identifier, an identification of a party to whom the call should be forwarded and an identification of a voicemail server associated with the callee.

The apparatus further includes provisions for communicating the routing message to a call controller.

The provisions for producing a public network routing message identifying a gateway to the public network may include provisions for searching a database of route records associating route identifiers with dialing codes to find a route record having a dialing code having a number pattern matching at least a portion of the reformatted callee identifier.

The apparatus further includes provisions for searching a database of supplier records associating supplier identifiers with the route identifiers to locate at least one supplier record associated with the route identifier associated with the route record having a dialing code having a number pattern matching at least a portion of the reformatted callee identifier.

The apparatus further includes a routing message buffer and provisions for loading the routing message buffer with the reformatted callee identifier and an identification of specific routes associated respective ones of the supplier records associated with the route record and loading the routing message buffer with a time value and a timeout value.

The apparatus further includes provisions for communicating a routing message including the contents of the routing message buffer to a call controller.

The apparatus further includes means for causing said dialing profile to include a maximum concurrent call value and a concurrent call count value and for causing said concurrent call count value to be incremented when the user associated with said dialing profile initiates a call and for causing said concurrent call count value to be decremented when a call with said user associated with said dialing profile is ended.

In accordance with another aspect of the invention, there is provided a data structure for access by an apparatus for producing a routing message for use by a call routing controller in a communications system. The data structure includes dialing profile records comprising fields for associating with respective subscribers to the system, a subscriber user name, direct-in-dial records comprising fields for associating with respective subscriber usernames, a user domain and a direct-in-dial number, prefix to node records comprising fields for associating with at least a portion of the respective subscriber usernames, a node address of a node in the system, whereby a subscriber name can be used to find a user domain, at least a portion of the a subscriber name can be used to find a node with which the subscriber identified by the subscriber name is associated, and a user domain and subscriber name can be located in response to a direct-in-dial number.

In accordance with another aspect of the invention, there is provided a data structure for access by an apparatus for producing a routing message for use by a call routing controller in a communications system. The data structure includes master list records comprising fields for associating a dialing code with respective master list identifiers and supplier list records linked to master list records by the master list identifiers, said supplier list records comprising fields for associating with a communications services supplier, a supplier id, a master list id, a route identifier and a billing rate code, whereby communications services suppliers are associated with dialing codes, such that dialing codes can be used to locate suppliers capable of providing a communications link associated with a given dialing code.

In accordance with another aspect of the invention, there is provided a method for determining a time to permit a communication session to be conducted. The method involves calculating a cost per unit time, calculating a first time value as a sum of a free time attributed to a participant in the communication session and the quotient of a funds balance held by the participant to the cost per unit time value and producing a second time value in response to the first time value and a billing pattern associated with the participant, the billing pattern including first and second billing intervals and the second time value being the time to permit a communication session to be conducted.

Calculating the first time value may involve retrieving a record associated with the participant and obtaining from the record at least one of the free time and the funds balance.

Producing the second time value may involve producing a remainder value representing a portion of the second billing interval remaining after dividing the second billing interval into a difference between the first time value and the first billing interval.

Producing the second time value may involve setting a difference between the first time value and the remainder as the second time value.

The method may further involve setting the second time value to zero when the remainder is greater than zero and the first time value is less than the free time associated with the participant.

Calculating the cost per unit time may involve locating a record in a database, the record comprising a markup type indicator, a markup value and a billing pattern and setting a reseller rate equal to the sum of the markup value and the buffer rate.

Locating the record in a database may involve locating at least one of a record associated with a reseller and a route associated with the reseller, a record associated with the reseller and a default reseller markup record.

Calculating the cost per unit time value further may involve locating at least one of an override record specifying a route cost per unit time amount associated with a route associated with the communication session, a reseller record associated with a reseller of the communications session, the reseller record specifying a reseller cost per unit time associated with the reseller for the communication session, a default operator markup record specifying a default cost per unit time.

The method may further involve setting as the cost per unit time the sum of the reseller rate and at least one of the route cost per unit time, the reseller cost per unit time and the default cost per unit time.

The method may further involve receiving a communication session time representing a duration of the communication session and incrementing a reseller balance by the product of the reseller rate and the communication session time.

The method may further involve receiving a communication session time representing a duration of the communication session and incrementing a system operator balance by a product of the buffer rate and the communication session time.

In accordance with another aspect of the invention, there is provided an apparatus for determining a time to permit a communication session to be conducted. The apparatus includes a processor circuit, a computer readable medium coupled to the processor circuit and encoded with instructions for directing the processor circuit to calculate a cost per unit time for the communication session, calculate a first time value as a sum of a free time attributed to a participant in the communication session and the quotient of a funds balance held by the participant to the cost per unit time value and produce a second time value in response to the first time value and a billing pattern associated with the participant, the billing pattern including first and second billing intervals and the second time value being the time to permit a communication session to be conducted.

The instructions may include instructions for directing the processor circuit to retrieve a record associated with the participant and obtain from the record at least one of the free time and the funds balance.

The instructions may include instructions for directing the processor circuit to produce the second time value by producing a remainder value representing a portion of the second billing interval remaining after dividing the second billing interval into a difference between the first time value and the first billing interval.

The instructions may include instructions for directing the processor circuit to produce the second time value comprises setting a difference between the first time value and the remainder as the second time value.

The instructions may include instructions for directing the processor circuit to set the second time value to zero when the remainder is greater than zero and the first time value is less than the free time associated with the participant.

The instructions for directing the processor circuit to calculate the cost per unit time may include instructions for directing the processor circuit to locate a record in a database, the record comprising a markup type indicator, a markup value and a billing pattern and set a reseller rate equal to the sum of the markup value and the buffer rate.

The instructions for directing the processor circuit to locate the record in a database may include instructions for directing the processor circuit to locate at least one of a record associated with a reseller and a route associated with the reseller, a record associated with the reseller, and a default reseller markup record. The instructions for directing the processor circuit to calculate the cost per unit time value may further include instructions for directing the processor circuit to locate at least one of an override record specifying a route cost per unit time amount associated with a route associated with the communication session, a reseller record associated with a reseller of the communications session, the reseller record specifying a reseller cost per unit time associated with the reseller for the communication session, a default operator markup record specifying a default cost per unit time.

The instructions may include instructions for directing the processor circuit to set as the cost per unit time the sum of the reseller rate and at least one of the route cost per unit time, the reseller cost per unit time and the default cost per unit time.

The instructions may include instructions for directing the processor circuit to receive a communication session time representing a duration of the communication session and increment a reseller balance by the product of the reseller rate and the communication session time.

The instructions may include instructions for directing the processor circuit to receive a communication session time representing a duration of the communication session and increment a system operator balance by a product of the buffer rate and the communication session time.

In accordance with another aspect of the invention, there is provided a process for attributing charges for communications services. The process involves determining a first chargeable time in response to a communication session time and a pre-defined billing pattern, determining a user cost value in response to the first chargeable time and a free time value associated with a user of the communications services, changing an account balance associated with the user in response to a user cost per unit time. The process may further involve changing an account balance associated with a reseller of the communications services in response to a reseller cost per unit time and the communication session time and changing an account balance associated with an operator of the communications services in response to an operator cost per unit time and the communication session time.

Determining the first chargeable time may involve locating at least one of an override record specifying a route cost per unit time and billing pattern associated with a route associated with the communication session, a reseller record associated with a reseller of the communications session, the reseller record specifying a reseller cost per unit time and billing pattern associated with the reseller for the communication session and a default record specifying a default cost per unit time and billing pattern and setting as the pre-defined billing pattern the billing pattern of the record located. The billing pattern of the record located may involve a first billing interval and a second billing interval.

Determining the first chargeable time may involve setting the first chargeable time equal to the first billing interval when the communication session time is less than or equal to the first billing interval.

Determining the first chargeable time may involve producing a remainder value representing a portion of the second billing interval remaining after dividing the second billing interval into a difference between communication session time and the first interval when the communication session time is greater than the communication session time and setting the first chargeable time to a difference between the communication session time and the remainder when the remainder is greater than zero and setting the first chargeable time to the communication session time when the remainder is not greater than zero.

The process may further involve determining a second chargeable time in response to the first chargeable time and the free time value associated with the user of the communications services when the first chargeable time is greater than or equal to the free time value associated with the user of the communications services.

Determining the second chargeable time may involve setting the second chargeable time to a difference between the first chargeable time.

The process may further involve resetting the free time value associated with the user to zero when the first chargeable time is greater than or equal to the free time value associated with the user of the communications services.

Changing an account balance associated with the user may involve calculating a user cost value in response to the second chargeable time and the user cost per unit time.

The process may further involve changing a user free cost balance in response to the user cost value.

The process may further involve setting the user cost to zero when the first chargeable time is less than the free time value associated with the user.

The process may further involve changing a user free time balance in response to the first chargeable time.

In accordance with another aspect of the invention, there is provided an apparatus for attributing charges for communications services. The apparatus includes a processor circuit, a computer readable medium in communication with the processor circuit and encoded with instructions for directing the processor circuit to determine a first chargeable time in response to a communication session time and a pre-defined billing pattern, determine a user cost value in response to the first chargeable time and a free time value associated with a user of the communications services, change an account balance associated with the user in response to a user cost per unit time.

The instructions may further include instructions for changing an account balance associated with a reseller of the communications services in response to a reseller cost per unit time and the communication session time and changing an account balance associated with an operator of the communications services in response to an operator cost per unit time and the communication session time.

The instructions for directing the processor circuit to determine the first chargeable time may further include instructions for causing the processor circuit to communicate with a database to locate at least one of an override record specifying a route cost per unit time and billing pattern associated with a route associated with the communication session, a reseller record associated with a reseller of the communications session, the reseller record specifying a reseller cost per unit time and billing pattern associated with the reseller for the communication session and a default record specifying a default cost per unit time and billing pattern and instructions for setting as the pre-defined billing pattern the billing pattern of the record located. The billing pattern of the record located may include a first billing interval and a second billing interval.

The instructions for causing the processor circuit to determine the first chargeable time may include instructions for directing the processor circuit to set the first chargeable time equal to the first billing interval when the communication session time is less than or equal to the first billing interval.

The instructions for causing the processor circuit to determine the first chargeable time may include instructions for producing a remainder value representing a portion of the second billing interval remaining after dividing the second billing interval into a difference between communication session time and the first interval when the communication session time is greater than the communication session time and instructions for causing the processor circuit to set the first chargeable time to a difference between the communication session time and the remainder when the remainder is greater than zero and instructions for causing the processor circuit to set the first chargeable time to the communication session time when the remainder is not greater than zero.

The instructions may further include instructions for causing the processor circuit to determine a second chargeable time in response to the first chargeable time and the free time value associated with the user of the communications services when the first chargeable time is greater than or equal to the free time value associated with the user of the communications services.

The instructions for causing the processor circuit to determine the second chargeable time may include instructions for causing the processor circuit to set the second chargeable time to a difference between the first chargeable time.

The instructions may further include instructions for causing the processor circuit to reset the free time value associated with the user to zero when the first chargeable time is greater than or equal to the free time value associated with the user of the communications services.

The instructions for causing the processor circuit to change an account balance associated with the user may include instructions for causing the processor circuit to calculate a user cost value in response to the second chargeable time and the user cost per unit time.

The instructions may further include instructions for causing the processor circuit to change a user free cost balance in response to the user cost value.

The instructions may further include instructions for causing the processor circuit to set the user cost to zero when the first chargeable time is less than the free time value associated with the user.

The instructions may further include instructions for causing the processor circuit to change a user free time balance in response to the first chargeable time.

In accordance with another aspect of the invention, there is provided a computer readable medium encoded with codes for directing a processor circuit to execute one or more of the methods described above and/or variants thereof.

Other aspects and features of the present invention will become apparent to those ordinarily skilled in the art upon review of the following description of specific embodiments of the invention in conjunction with the accompanying figures.

## BRIEF DESCRIPTION OF THE DRAWINGS

In drawings which illustrate embodiments of the invention,

FIG. **1** is a block diagram of a system according to a first embodiment of the invention;

FIG. **2** is a block diagram of a caller telephone according to the first embodiment of the invention;

FIG. **3** is a schematic representation of a SIP invite message transmitted between the caller telephone and a controller shown in FIG. **1**;

FIG. **4** is a block diagram of a call controller shown in FIG. **1**;

FIG. **5** is a flowchart of a process executed by the call controller shown in FIG. **1**;

FIG. **6** is a schematic representation of a routing, billing and rating (RC) request message produced by the call controller shown in FIG. **1**;

FIG. **7** is a block diagram of a processor circuit of a routing, billing, rating element of the system shown in FIG. **1**;

FIGS. **8**A-**8**D is a flowchart of a RC request message handler executed by the RC processor circuit shown in FIG. **7**;

FIG. **9** is a tabular representation of a dialing profile stored in a database accessible by the RC shown in FIG. **1**;

FIG. **10** is a tabular representation of a dialing profile for a caller using the caller telephone shown in FIG. **1**;

VPLM00248

FIG. **11** is a tabular representation of a callee profile for a callee located in Calgary;

FIG. **12** is a tabular representation of a callee profile for a callee located in London;

FIG. **13** is a tabular representation of a Direct-in-Dial (DID) bank table record stored in the database shown in FIG. **1**;

FIG. **14** is a tabular representation of an exemplary DID bank table record for the Calgary callee referenced in FIG. **11**;

FIG. **15** is a tabular representation of a routing message transmitted from the RC to the call controller shown in FIG. **1**;

FIG. **16** is a schematic representation of a routing message buffer holding a routing message for routing a call to the Calgary callee referenced in FIG. **11**;

FIG. **17** is a tabular representation of a prefix to supernode table record stored in the database shown in FIG. **1**;

FIG. **18** is a tabular representation of a prefix to supernode table record that would be used for the Calgary callee referenced in FIG. **11**;

FIG. **19** is a tabular representation of a master list record stored in a master list table in the database shown in FIG. **1**;

FIG. **20** is a tabular representation of a populated master list record;

FIG. **21** is a tabular representation of a suppliers list record stored in the database shown in FIG. **1**;

FIG. **22** is a tabular representation of a specific supplier list record for a first supplier;

FIG. **23** is a tabular representation of a specific supplier list record for a second supplier;

FIG. **24** is a tabular representation of a specific supplier list record for a third supplier;

FIG. **25** is a schematic representation of a routing message, held in a routing message buffer, identifying to the controller a plurality of possible suppliers that may carry the call;

FIG. **26** is a tabular representation of a call block table record;

FIG. **27** is a tabular representation of a call block table record for the Calgary callee;

FIG. **28** is a tabular representation of a call forwarding table record;

FIG. **29** is a tabular representation of a call forwarding table record specific for the Calgary callee;

FIG. **30** is a tabular representation of a voicemail table record specifying voicemail parameters to enable the caller to leave a voicemail message for the callee;

FIG. **31** is a tabular representation of a voicemail table record specific to the Calgary callee;

FIG. **32** is a schematic representation of an exemplary routing message, held in a routing message buffer, indicating call forwarding numbers and a voicemail server identifier;

FIGS. **33**A and **33**B are respective portions of a flowchart of a process executed by the RC processor for determining a time to live value;

FIG. **34** is a tabular representation of a subscriber bundle table record;

FIG. **35** is a tabular representation of a subscriber bundle record for the Vancouver caller;

FIG. **36** is a tabular representation of a bundle override table record;

FIG. **37** is a tabular representation of bundle override record for a located master list ID;

FIG. **38** is a tabular representation of a subscriber account table record;

FIG. **39** is a tabular representation of a subscriber account record for the Vancouver caller;

FIG. **40** is a flowchart of a process for producing a second time value executed by the RC processor circuit shown in FIG. **7**;

FIG. **41** is a flowchart for calculating a call cost per unit time;

FIG. **42** is a tabular representation of a system operator special rates table record;

FIG. **43** is a tabular representation of a system operator special rates table record for a reseller named Klondike;

FIG. **44** is a tabular representation of a system operator mark-up table record;

FIG. **45** is a tabular representation of a system operator mark-up table record for the reseller Klondike;

FIG. **46** is a tabular representation of a default system operator mark-up table record;

FIG. **47** is a tabular representation of a reseller special destinations table record;

FIG. **48** is a tabular representation of a reseller special destinations table record for the reseller Klondike;

FIG. **49** is a tabular representation of a reseller global mark-up table record;

FIG. **50** is a tabular representation of a reseller global mark-up table record for the reseller Klondike;

FIG. **51** is a tabular representation of a SIP bye message transmitted from either of the telephones shown in FIG. **1** to the call controller;

FIG. **52** is a tabular representation of a SIP bye message sent to the controller from the Calgary callee;

FIG. **53** is a flowchart of a process executed by the call controller for producing a RC stop message in response to receipt of a SIP bye message;

FIG. **54** is a tabular representation of an exemplary RC call stop message;

FIG. **55** is a tabular representation of an RC call stop message for the Calgary callee;

FIGS. **56**A and **56**B are respective portions of a flowchart of a RC call stop message handling routine executed by the RC shown in FIG. **1**;

FIG. **57** is a tabular representation of a reseller accounts table record;

FIG. **58** is a tabular representation of a reseller accounts table record for the reseller Klondike;

FIG. **59** is a tabular representation of a system operator accounts table record; and

FIG. **60** is a tabular representation of a system operator accounts record for the system operator described herein.

## DETAILED DESCRIPTION

Referring to FIG. **1**, a system for making voice over IP telephone/videophone calls is shown generally at **10**. The system includes a first super node shown generally at **11** and a second super node shown generally at **21**. The first super node **11** is located in geographical area, such as Vancouver, B.C., Canada for example and the second super node **21** is located in London, England, for example. Different super nodes may be located in different geographical regions throughout the world to provide telephone/videophone service to subscribers in respective regions. These super nodes may be in communication with each other by high speed/high data throughput links including optical fiber, satellite and/or cable links, forming a backbone to the system. These super nodes may alternatively or, in addition, be in communication with each other through conventional internet services.

In the embodiment shown, the Vancouver supernode **11** provides telephone/videophone service to western Canadian customers from Vancouver Island to Ontario. Another node

(not shown) may be located in Eastern Canada to provide services to subscribers in that area.

Other nodes of the type shown may also be employed within the geographical area serviced by a supernode, to provide for call load sharing, for example within a region of the geographical area serviced by the supernode. However, in general, all nodes are similar and have the properties described below in connection with the Vancouver supernode **11**.

In this embodiment, the Vancouver supernode includes a call controller (C) **14**, a routing controller (RC) **16**, a database **18** and a voicemail server **19** and a media relay **9**. Each of these may be implemented as separate modules on a common computer system or by separate computers, for example. The voicemail server **19** need not be included in the node and can be provided by an outside service provider.

Subscribers such as a subscriber in Vancouver and a subscriber in Calgary communicate with the Vancouver supernode using their own internet service providers which route internet traffic from these subscribers over the internet shown generally at **13** in FIG. **1**. To these subscribers the Vancouver supernode is accessible at a pre-determined internet protocol (IP) address or a fully qualified domain name that can be accessed in the usual way through a subscriber's internet service provider. The subscriber in Vancouver uses a telephone **12** that is capable of communicating with the Vancouver supernode **11** using Session Initiation Protocol (SIP) messages and the Calgary subscriber uses a similar telephone **15**, in Calgary AB.

It should be noted that throughout the description of the embodiments of this invention, the IP/UDP addresses of all elements such as the caller and callee telephones, call controller, media relay, and any others, will be assumed to be valid IP/UDP addresses directly accessible via the Internet or a private IP network, for example, depending on the specific implementation of the system. As such, it will be assumed, for example, that the caller and callee telephones will have IP/UDP addresses directly accessible by the call controllers and the media relays on their respective supernodes, and those addresses will not be obscured by Network Address Translation (NAT) or similar mechanisms. In other words, the IP/UDP information contained in SIP messages (for example the SIP Invite message or the RC Request message which will be described below) will match the IP/UDP addresses of the IP packets carrying these SIP messages.

It will be appreciated that in many situations, the IP addresses assigned to various elements of the system may be in a private IP address space, and thus not directly accessible from other elements. Furthermore, it will also be appreciated that NAT is commonly used to share a "public" IP address between multiple devices, for example between home PCs and IP telephones sharing a single Internet connection. For example, a home PC may be assigned an IP address such as 192.168.0.101 and a Voice over IP telephone may be assigned an IP address of 192.168.0.103. These addresses are located in so called "non-routable" (IP) address space and cannot be accessed directly from the Internet. In order for these devices to communicate with other computers located on the Internet, these IP addresses have to be converted into a "public" IP address, for example 24.10.10.123 assigned by the Internet Service Provider to the subscriber, by a device performing NAT, typically a home router. In addition to translating the IP addresses, NAT typically also translates UDP port numbers, for example an audio path originating at a VoIP telephone and using a UDP port **12378** at its private IP address, may have be translated to a UDP port **23465** associated with the public IP address of the NAT device. In other words, when a packet originating from the above VoIP telephone arrives at an Internet-based supernode, the source IP/UDP address contained in the IP packet header will be 24.10.10.1:23465, whereas the source IP/UDP address information contained in the SIP message inside this IP packet will be 192.168.0.103:12378. The mismatch in the IP/UDP addresses may cause a problem for SIP-based VoIP systems because, for example, a supernode will attempt to send messages to a private address of a telephone but the messages will never get there.

Referring to FIG. **1**, in an attempt to make a call by the Vancouver telephone/videophone **12** to the Calgary telephone/videophone **15**, the Vancouver telephone/videophone sends a SIP invite message to the Vancouver supernode **11** and in response, the call controller **14** sends an RC request message to the RC **16** which makes various enquiries of the database **18** to produce a routing message which is sent back to the call controller **14**. The call controller **14** then communicates with the media relay **9** to cause a communications link including an audio path and a videophone (if a videopath call) to be established through the media relay to the same node, a different node or to a communications supplier gateway as shown generally at **20** to carry audio, and where applicable, video traffic to the call recipient or callee.

Generally, the RC **16** executes a process to facilitate communication between callers and callees. The process involves, in response to initiation of a call by a calling subscriber, receiving a callee identifier from the calling subscriber, using call classification criteria associated with the calling subscriber to classify the call as a public network call or a private network call and producing a routing message identifying an address on the private network, associated with the callee when the call is classified as a private network call and producing a routing message identifying a gateway to the public network when the call is classified as a public network call.

Subscriber Telephone

In greater detail, referring to FIG. **2**, in this embodiment, the telephone/videophone **12** includes a processor circuit shown generally at **30** comprising a microprocessor **32**, program memory **34**, an input/output (I/O) port **36**, parameter memory **38** and temporary memory **40**. The program memory **34**, I/O port **36**, parameter memory **38** and temporary memory **40** are all in communication with the microprocessor **32**. The I/O port **36** has a dial input **42** for receiving a dialled telephone/videophone number from a keypad, for example, or from a voice recognition unit or from pre-stored telephone/videophone numbers stored in the parameter memory **38**, for example. For simplicity, in FIG. **2** a box labelled dialing functions **44** represents any device capable of informing the microprocessor **32** of a callee identifier, e.g., a callee telephone/videophone number.

The processor **32** stores the callee identifier in a dialled number buffer **45**. In this case, assume the dialled number is 2001 1050 2222 and that it is a number associated with the Calgary subscriber. The I/O port **36** also has a handset interface **46** for receiving and producing signals from and to a handset that the user may place to his ear. This interface **46** may include a BLUETOOTH™ wireless interface, a wired interface or speaker phone, for example. The handset acts as a termination point for an audio path (not shown) which will be appreciated later. The I/O port **36** also has an internet connection **48** which is preferably a high speed internet connection and is operable to connect the telephone/videophone to an internet service provider. The internet connection **48** also acts as a part of the voice path, as will be appreciated later. It will be appreciated that where the subscriber device is a videophone, a separate video path is established in the same way an audio path is established. For simplicity, the following

description refers to a telephone call, but it is to be understood that a videophone call is handled similarly, with the call controller causing the media relay to facilitate both an audio path and a video path instead of only an audio path.

The parameter memory **38** has a username field **50**, a password field **52** an IP address field **53** and a SIP proxy address field **54**, for example. The user name field **50** is operable to hold a user name, which in this case is 2001 1050 8667. The user name is assigned upon subscription or registration into the system and, in this embodiment, includes a twelve digit number having a continent code **61**, a country code **63**, a dealer code **70** and a unique number code **74**. The continent code **61** is comprised of the first or left-most digit of the user name in this embodiment. The country code **63** is comprised of the next three digits. The dealer code **70** is comprised of the next four digits and the unique number code **74** is comprised of the last four digits. The password field **52** holds a password of up to 512 characters, in this example. The IP address field **53** stores an IP address of the telephone, which for this explanation is 192.168.0.20. The SIP proxy address field **54** holds an IP protocol compatible proxy address which may be provided to the telephone through the internet connection **48** as part of a registration procedure.

The program memory **34** stores blocks of codes for directing the processor **32** to carry out the functions of the telephone, one of which includes a firewall block **56** which provides firewall functions to the telephone, to prevent access by unauthorized persons to the microprocessor **32** and memories **34**, **38** and **40** through the internet connection **48**. The program memory **34** also stores codes **57** for establishing a call ID. The call ID codes **57** direct the processor **32** to produce a call identifier having a format comprising a hexadecimal string at an IP address, the IP address being the IP address of the telephone. Thus, an exemplary call identifier might be FF10@192.168.0.20.

Generally, in response to picking up the handset interface **46** and activating a dialing function **44**, the microprocessor **32** produces and sends a SIP invite message as shown in FIG. **3**, to the routing controller **16** shown in FIG. **1**. This SIP invite message is essentially to initiate a call by a calling subscriber.

Referring to FIG. **3**, the SIP invite message includes a caller ID field **60**, a callee identifier field **62**, a digest parameters field **64**, a call ID field **65** an IP address field **67** and a caller UDP port field **69**. In this embodiment, the caller ID field **60** includes the user name 2001 1050 8667 that is the Vancouver user name stored in the user name field **50** of the parameter memory **38** in the telephone **12** shown in FIG. **2**. In addition, referring back to FIG. **3**, the callee identifier field **62** includes a callee identifier which in this embodiment is the user name 2001 1050 2222 that is the dialled number of the Calgary subscriber stored in the dialled number buffer **45** shown in FIG. **2**. The digest parameters field **64** includes digest parameters and the call ID field **65** includes a code comprising a generated prefix code (FF10) and a suffix which is the Internet Protocol (IP) address of the telephone **12** stored in the IP address field **53** of the telephone. The IP address field **67** holds the IP address assigned to the telephone, in this embodiment 192.168.0.20, and the caller UDP port field **69** includes a UDP port identifier identifying a UDP port at which the audio path will be terminated at the caller's telephone.

Call Controller

Referring to FIG. **4**, a call controller circuit of the call controller **14** (FIG. **1**) is shown in greater detail at **100**. The call controller circuit **100** includes a microprocessor **102**, program memory **104** and an I/O port **106**. The circuit **100** may include a plurality of microprocessors, a plurality of program memories and a plurality of I/O ports to be able to handle a large volume of calls. However, for simplicity, the call controller circuit **100** will be described as having only one microprocessor **102**, program memory **104** and I/O port **106**, it being understood that there may be more.

Generally, the I/O port **106** includes an input **108** for receiving messages such as the SIP invite message shown in FIG. **3**, from the telephone shown in FIG. **2**. The I/O port **106** also has an RC request message output **110** for transmitting an RC request message to the RC **16** of FIG. **1**, an RC message input **112** for receiving routing messages from the RC **16**, a gateway output **114** for transmitting messages to one of the gateways **20** shown in FIG. **1** to advise the gateway to establish an audio path, for example, and a gateway input **116** for receiving messages from the gateway. The I/O port **106** further includes a SIP output **118** for transmitting messages to the telephone **12** to advise the telephone of the IP addresses of the gateways which will establish the audio path. The I/O port **106** further includes a voicemail server input and output **117**, **119** respectively for communicating with the voicemail server **19** shown in FIG. **1**.

While certain inputs and outputs have been shown as separate, it will be appreciated that some may be a single IP address and IP port. For example, the messages sent to the RC **16** and received from the RC **16** may be transmitted and received on the same single IP port.

The program memory **104** includes blocks of code for directing the microprocessor **102** to carry out various functions of the call controller **14**. For example, these blocks of code include a first block **120** for causing the call controller circuit **100** to execute a SIP invite to RC request process to produce an RC request message in response to a received SIP invite message. In addition, there is a routing message to gateway message block **122** which causes the call controller circuit **100** to produce a gateway query message in response to a received routing message from the RC **16**.

Referring to FIG. **5**, the SIP invite to RC request process is shown in more detail at **120**. On receipt of a SIP invite message of the type shown in FIG. **3**, block **122** of FIG. **5** directs the call controller circuit **100** of FIG. **4** to authenticate the user. This may be done, for example, by prompting the user for a password, by sending a message back to the telephone **12** which is interpreted at the telephone as a request for a password entry or the password may automatically be sent to the call controller **14** from the telephone, in response to the message. The call controller **14** may then make enquiries of databases to which it has access, to determine whether or not the user's password matches a password stored in the database. Various functions may be used to pass encryption keys or hash codes back and forth to ensure that the transmittal of passwords is secure.

Should the authentication process fail, the call controller circuit **100** is directed to an error handling routine **124** which causes messages to be displayed at the telephone **12** to indicate there was an authentication problem. If the authentication procedure is passed, block **121** directs the call controller circuit **100** to determine whether or not the contents of the caller ID field **60** of the SIP invite message received from the telephone is an IP address. If it is an IP address, then block **123** directs the call controller circuit **100** to set the contents of a type field variable maintained by the microprocessor **102** to a code representing that the call type is a third party invite. If at block **121** the caller ID field contents do not identify an IP address, then block **125** directs the microprocessor to set the contents of the type field to a code indicating that the call is being made by a system subscriber. Then, block **126** directs the call controller circuit to read the call identifier **65** provided

in the SIP invite message from the telephone **12**, and at block **128** the processor is directed to produce an RC request message that includes that call ID. Block **129** then directs the call controller circuit **100** to send the RC request to the RC **16**.

Referring to FIG. **6**, an RC request message is shown generally at **150** and includes a caller field **152**, a callee field **154**, a digest field **156**, a call ID field **158** and a type field **160**. The caller, callee, digest call ID fields **152**, **154**, **156** and **158** contain copies of the caller, callee, digest parameters and call ID fields **60**, **62**, **64** and **65** of the SIP invite message shown in FIG. **3**. The type field **160** contains the type code established at blocks **123** or **125** of FIG. **5** to indicate whether the call is from a third party or system subscriber, respectively. The caller identifier field may include a PSTN number or a system subscriber username as shown, for example.

Routine Controller (RC)

Referring to FIG. **7**, the RC **16** is shown in greater detail and includes an RC processor circuit shown generally at **200**. The RC processor circuit **200** includes a processor **202**, program memory **204**, a table memory **206**, buffer memory **207**, and an I/O port **208**, all in communication with the processor **202**. (As earlier indicated, there may be a plurality of processor circuits (**202**), memories (**204**), etc.)

The buffer memory **207** includes a caller id buffer **209** and a callee id buffer **211**.

The I/O port **208** includes a database request port **210** through which a request to the database (**18** shown in FIG. **1**) can be made and includes a database response port **212** for receiving a reply from the database **18**. The I/O port **208** further includes an RC request message input **214** for receiving the RC request message from the call controller (**14** shown in FIG. **1**) and includes a routing message output **216** for sending a routing message back to the call controller **14**. The I/O port **208** thus acts to receive caller identifier and a callee identifier contained in the RC request message from the call controller, the RC request message being received in response to initiation of a call by a calling subscriber.

The program memory **204** includes blocks of codes for directing the processor **202** to carry out various functions of the RC (**16**). One of these blocks includes an RC request message handler **250** which directs the RC to produce a routing message in response to a received RC request message. The RC request message handler process is shown in greater detail at **250** in FIGS. **8**A through **8**D.

RC Request Message Handler

Referring to FIG. **8**A, the RC request message handler begins with a first block **252** that directs the RC processor circuit (**200**) to store the contents of the RC request message (**150**) in buffers in the buffer memory **207** of FIG. **7**, one of which includes the caller ID buffer **209** of FIG. **7** for separately storing the contents of the callee field **154** of the RC request message. Block **254** then directs the RC processor circuit to use the contents of the caller field **152** in the RC request message shown in FIG. **6**, to locate and retrieve from the database **18** a record associating calling attributes with the calling subscriber. The located record may be referred to as a dialing profile for the caller. The retrieved dialing profile may then be stored in the buffer memory **207**, for example.

Referring to FIG. **9**, an exemplary data structure for a dialing profile is shown generally at **253** and includes a user name field **258**, a domain field **260**, and calling attributes comprising a national dialing digits (NDD) field **262**, an international dialing digits (IDD) field **264**, a country code field **266**, a local area codes field **267**, a caller minimum local length field **268**, a caller maximum local length field **270**, a reseller field **273**, a maximum number of concurrent calls field **275** and a current number of concurrent calls field **277**. Effectively the dialing profile is a record identifying calling attributes of the caller identified by the caller identifier. More generally, dialing profiles represent calling attributes of respective subscribers.

An exemplary caller profile for the Vancouver subscriber is shown generally at **276** in FIG. **10** and indicates that the user name field **258** includes the user name (2001 1050 8667) that has been assigned to the subscriber and is stored in the user name field **50** in the telephone as shown in FIG. **2**.

Referring back to FIG. **10**, the domain field **260** includes a domain name as shown at **282**, including a node type identifier **284**, a location code identifier **286**, a system provider identifier **288** and a domain portion **290**. The domain field **260** effectively identifies a domain or node associated with the user identified by the contents of the user name field **258**.

In this embodiment, the node type identifier **284** includes the code "sp" identifying a supernode and the location identifier **286** identifies the supernode as being in Vancouver (YVR). The system provider identifier **288** identifies the company supplying the service and the domain portion **290** identifies the "com" domain.

The national dialled digit field **262** in this embodiment includes the digit "1" and, in general, includes a number specified by the International Telecommunications Union (ITU) Telecommunications Standardization Sector (ITU-T) E.164 Recommendation which assigns national dialing digits to countries.

The international dialing digit field **264** includes a code also assigned according to the ITU-T according to the country or location of the user.

The country code field **266** also includes the digit "1" and, in general, includes a number assigned according to the ITU-T to represent the country in which the user is located.

The local area codes field **267** includes a list of area codes that have been assigned by the ITU-T to the geographical area in which the subscriber is located. The caller minimum and maximum local number length fields **268** and **270** hold numbers representing minimum and maximum local number lengths permitted in the area code(s) specified by the contents of the local area codes field **267**. The reseller field **273** is optional and holds a code identifying a retailer of the services, in this embodiment "Klondike". The maximum number of concurrent calls field **275** holds a code identifying the maximum number of concurrent calls that the user is entitled to cause to concurrently exist. This permits more than one call to occur concurrently while all calls for the user are billed to the same account. The current number of concurrent calls field **277** is initially 0 and is incremented each time a concurrent call associated with the user is initiated and is decremented when a concurrent call is terminated.

The area codes associated with the user are the area codes associated with the location code identifier **286** of the contents of the domain field **260**.

A dialing profile of the type shown in FIG. **9** is produced whenever a user registers with the system or agrees to become a subscriber to the system. Thus, for example, a user wishing to subscribe to the system may contact an office maintained by a system operator and personnel in the office may ask the user certain questions about his location and service preferences, whereupon tables can be used to provide office personnel with appropriate information to be entered into the user name **258**, domain **260**, NDD **262**, IDD **264**, country code **266**, local area codes **267**, caller minimum and maximum local length fields **268** and **270** reseller field **273** and concurrent call fields **275** and **277** to establish a dialing profile for the user.

Referring to FIGS. **11** and **12**, callee dialing profiles for users in Calgary and London, respectively for example, are shown.

In addition to creating dialing profiles when a user registers with the system, a direct-in-dial (DID) record of the type shown at **278** in FIG. **13** is added to a direct-in-dial bank table in the database (**18** in FIG. **1**) to associate the username and a host name of the supernode with which the user is associated, with an E.164 number associated with the user on the PSTN network.

An exemplary DID table record entry for the Calgary callee is shown generally at **300** in FIG. **14**. The user name field **281** and user domain field **272** are analogous to the user name and user domain fields **258** and **260** of the caller dialing profile shown in FIG. **10**. The contents of the DID field **274** include a E.164 public telephone number including a country code **283**, an area code **285**, an exchange code **287** and a number **289**. If the user has multiple telephone numbers, then multiple records of the type shown at **300** would be included in the DID bank table, each having the same user name and user domain, but different DID field **274** contents reflecting the different telephone numbers associated with that user.

In addition to creating dialing profiles as shown in FIG. **9** and DID records as shown in FIG. **13** when a user registers with the system, call blocking records of the type shown in FIG. **26**, call forwarding records of the type shown in FIG. **28** and voicemail records of the type shown in FIG. **30** may be added to the database **18** when a new subscriber is added to the system.

Referring back to FIG. **8**A, after retrieving a dialing profile for the caller, such as shown at **276** in FIG. **10**, the RC processor circuit **200** is directed to block **256** which directs the processor circuit (**200**) to determine whether the contents of the concurrent call field **277** are less then the contents of the maximum concurrent call field **275** of the dialing profile for the caller and, if so, block **271** directs the processor circuit to increment the contents of the concurrent call field **277**. If the contents of concurrent call field **277** are equal to or greater than the contents of the maximum concurrent call field **275**, block **259** directs the processor circuit **200** to send an error message back to the call controller (**14**) to cause the call controller to notify the caller that the maximum number of concurrent calls has been reached and no further calls can exist concurrently, including the presently requested call.

Assuming block **256** allows the call to proceed, the RC processor circuit **200** is directed to perform certain checks on the callee identifier provided by the contents of the callee field **154** in FIG. **6**, of the RC request message **150**. These checks are shown in greater detail in FIG. **8**B.

Referring to FIG. **8**B, the processor (**202** in FIG. **7**) is directed to a first block **257** that causes it to determine whether a digit pattern of the callee identifier (**154**) provided in the RC request message (**150**) includes a pattern that matches the contents of the international dialing digits (IDD) field **264** in the caller profile shown in FIG. **10**. If so, then block **259** directs the processor (**202**) to set a call type code identifier variable maintained by the processor to indicate that the call is an international call and block **261** directs the processor to produce a reformatted callee identifier by reformatting the callee identifier into a predefined digit format. In this embodiment, this is done by removing the pattern of digits matching the IDD field contents **264** of the caller dialing profile to effectively shorten the callee identifier. Then, block **263** directs the processor **202** to determine whether or not the callee identifier has a length which meets criteria establishing it as a number compliant with the E.164 Standard set by the ITU. If the length does not meet this criteria, block **265** directs the processor **202** to send back to the call controller (**14**) a message indicating the length is not correct. The process is then ended. At the call controller **14**, routines (not shown) stored in the program memory **104** may direct the processor (**102** of FIG. **4**) to respond to the incorrect length message by transmitting a message back to the telephone (**12** shown in FIG. **1**) to indicate that an invalid number has been dialled.

Still referring to FIG. **8**B, if the length of the amended callee identifier meets the criteria set forth at block **263**, block **269** directs the processor (**202** of FIG. **7**) to make a database request to determine whether or not the amended callee identifier is found in a record in the direct-in-dial bank (DID) table. Referring back to FIG. **8**B, at block **269**, if the processor **202** receives a response from the database indicating that the reformatted callee identifier produced at block **261** is found in a record in the DID bank table, then the callee is a subscriber to the system and the call is classified as a private network call by directing the processor to block **279** which directs the processor to copy the contents of the corresponding user name field (**281** in FIG. **14**) from the callee DID bank table record (**300** in FIG. **14**) into the callee ID buffer (**211** in FIG. **7**). Thus, the processor **202** locates a subscriber user name associated with the reformatted callee identifier. The processor **202** is then directed to point B in FIG. **8**A.

Subscriber to Subscriber Calls Between Different Nodes

Referring to FIG. **8**A, block **280** directs the processor (**202** of FIG. **7**) to execute a process to determine whether or not the node associated with the reformatted callee identifier is the same node that is associated with the caller identifier. To do this, the processor **202** determines whether or not a prefix (e.g., continent code **61**) of the callee name held in the callee ID buffer (**211** in FIG. **7**), is the same as the corresponding prefix of the caller name held in the username field **258** of the caller dialing profile shown in FIG. **10**. If the corresponding prefixes are not the same, block **302** in FIG. **8**A directs the processor (**202** in FIG. **7**) to set a call type flag in the buffer memory (**207** in FIG. **7**) to indicate the call is a cross-domain call. Then, block **350** of FIG. **8**A directs the processor (**202** of FIG. **7**) to produce a routing message identifying an address on the private network with which the callee identified by the contents of the callee ID buffer is associated and to set a time to live for the call at a maximum value of 99999, for example.

Thus the routing message includes a caller identifier, a call identifier set according to a username associated with the located DID bank table record and includes an identifier of a node on the private network with which the callee is associated.

The node in the system with which the callee is associated is determined by using the callee identifier to address a supernode table having records of the type as shown at **370** in FIG. **17**. Each record **370** has a prefix field **372** and a supernode address field **374**. The prefix field **372** includes the first n digits of the callee identifier. In this embodiment n=2. The supernode address field **374** holds a code representing the IP address or a fully qualified domain name of the node associated with the code stored in the callee identifier prefix field **372**. Referring to FIG. **18**, for example, if the prefix is 20, the supernode address associated with that prefix is sp.yvr.digifonica.com.

Referring to FIG. **15**, a generic routing message is shown generally at **352** and includes an optional supplier prefix field **354**, and optional delimiter field **356**, a callee user name field **358**, at least one route field **360**, a time to live field **362** and other fields **364**. The optional supplier prefix field **354** holds a code for identifying supplier traffic. The optional delimiter field **356** holds a symbol that delimits the supplier prefix code

from the callee user name field **358**. In this embodiment, the symbol is a number sign (#). The route field **360** holds a domain name or IP address of a gateway or node that is to carry the call, and the time to live field **362** holds a value representing the number of seconds the call is permitted to be active, based on subscriber available minutes and other billing parameters.

Referring to FIG. **8**A and FIG. **16**, an example of a routing message produced by the processor at block **350** for a caller associated with a different node than the caller is shown generally at **366** and includes only a callee field **359**, a route field **361** and a time to live field **362**.

Referring to FIG. **8**A, having produced a routing message as shown in FIG. **16**, block **381** directs the processor (**202** of FIG. **7**) to send the routing message shown in FIG. **16** to the call controller **14** shown in FIG. **1**.

Referring back to FIG. **8**B, if at block **257**, the callee identifier stored in the callee id buffer (**211** in FIG. **7**) does not begin with an international dialing digit, block **380** directs the processor (**202**) to determine whether or not the callee identifier begins with the same national dial digit code as assigned to the caller. To do this, the processor (**202**) is directed to refer to the retrieved caller dialing profile as shown in FIG. **10**. In FIG. **10**, the national dialing digit code **262** is the number 1. Thus, if the callee identifier begins with the number 1, then the processor (**202**) is directed to block **382** in FIG. **8**B.

Block **382** directs the processor (**202** of FIG. **7**) to examine the callee identifier to determine whether or not the digits following the NDD digit identify an area code that is the same as any of the area codes identified in the local area codes field **267** of the caller dialing profile **276** shown in FIG. **10**. If not, block **384** of FIG. **8**B directs the processor **202** to set the call type flag to indicate that the call is a national call. If the digits following the NDD digit identify an area code that is the same as a local area code associated with the caller as indicated by the caller dialing profile, block **386** directs the processor **202** to set the call type flag to indicate a local call, national style. After executing blocks **384** or **386**, block **388** directs the processor **202** to format the callee identifier into a pre-defined digit format to produce a re-formatted callee identifier by removing the national dialled digit and prepending a caller country code identified by the country code field **266** of the caller dialing profile shown in FIG. **10**. The processor (**202**) is then directed to block **263** of FIG. **8**B to perform other processing as already described above.

If at block **380**, the callee identifier does not begin with a national dialled digit, block **390** directs the processor (**202**) to determine whether the callee identifier begins with digits that identify the same area code as the caller. Again, the reference for this is the retrieved caller dialing profile shown in FIG. **10**. The processor (**202**) determines whether or not the first few digits of the callee identifier identify an area code corresponding to the local area code field **267** of the retrieved caller dialing profile. If so, then block **392** directs the processor **202** to set the call type flag to indicate that the call is a local call and block **394** directs the processor (**202**) to format the callee identifier into a pre-defined digit format to produce a reformatted callee identifier by prepending the caller country code to the callee identifier, the caller country code being determined from the country code field **266** of the retrieved caller dialing profile shown in FIG. **10**. The processor (**202**) is then directed to block **263** for further processing as described above.

Referring back to FIG. **8**B, at block **390**, the callee identifier does not start with the same area code as the caller, block **396** directs the processor (**202** of FIG. **7**) to determine whether the number of digits in the callee identifier, i.e. the length of the callee identifier, is within the range of digits indicated by the caller minimum local number length field **268** and the caller maximum local number length field **270** of the retrieved caller dialing profile shown in FIG. **10**. If so, then block **398** directs the processor (**202**) to set the call type flag to indicate a local call and block **400** directs the processor (**202**) to format the callee identifier into a pre-defined digit format to produce a reformatted callee identifier by prepending to the callee identifier the caller country code (as indicated by the country code field **266** of the retrieved caller dialing profile shown in FIG. **10**) followed by the caller area code (as indicated by the local area code field **267** of the caller profile shown in FIG. **10**). The processor (**202**) is then directed to block **263** of FIG. **8**B for further processing as described above.

Referring back to FIG. **8**B, if at block **396**, the callee identifier has a length that does not fall within the range specified by the caller minimum local number length field (**268** in FIG. **10**) and the caller maximum local number length field (**270** in FIG. **10**), block **402** directs the processor **202** of FIG. **7** to determine whether or not the callee identifier identifies a valid user name. To do this, the processor **202** searches through the database (**18** of FIG. **10** of dialing profiles to find a dialing profile having user name field contents (**258** in FIG. **10**) that match the callee identifier. If no match is found, block **404** directs the processor (**202**) to send an error message back to the call controller (**14**). If at block **402**, a dialing profile having a user name field **258** that matches the callee identifier is found, block **406** directs the processor **202** to set the call type flag to indicate that the call is a private network call and then the processor is directed to block **280** of FIG. **8**A. Thus, the call is classified as a private network call when the callee identifier identifies a subscriber to the private network.

From FIG. **8**B, it will be appreciated that there are certain groups of blocks of codes that direct the processor **202** in FIG. **7** to determine whether the callee identifier has certain features such as an international dialing digit, a national dialing digit, an area code and a length that meet certain criteria, and cause the processor **202** to reformat the callee identifier stored in the callee id buffer **211**, as necessary into a predetermined target format including only a country code, area code, and a normal telephone number, for example, to cause the callee identifier to be compatible with the E.164 number plan standard in this embodiment. This enables block **269** in FIG. **8**B to have a consistent format of callee identifiers for use in searching through the DID bank table records of the type shown in FIG. **13** to determine how to route calls for subscriber to subscriber calls on the same system. Effectively, therefore blocks **257**, **380**, **390**, **396** and **402** establish call classification criteria for classifying the call as a public network call or a private network call. Block **269** classifies the call, depending on whether or not the formatted callee identifier has a DID bank table record and this depends on how the call classification criteria are met and block **402** directs the processor **202** of FIG. **7** to classify the call as a private network call when the callee identifier complies with a predefined format, i.e. is a valid user name and identifies a subscriber to the private network, after the callee identifier has been subjected to the classification criteria of blocks **257**, **380**, **390** and **396**.

Subscriber to Non-Subscriber Calls

Not all calls will be subscriber to subscriber calls and this will be detected by the processor **202** of FIG. **7** when it executes block **269** in FIG. **8**B, and does not find a DID bank table record that is associated with the callee, in the DID bank table. When this occurs, the call is classified as a public network call by directing the processor **202** to block **408** of

FIG. **8**B which causes it to set the contents of the callee id buffer **211** of FIG. **7** equal to the newly formatted callee identifier, i.e., a number compatible with the E.164 standard. Then, block **410** of FIG. **8**B directs the processor (**202**) to search a database of route or master list records associating route identifiers with dialing codes shown in FIG. **19** to locate a router having a dialing code having a number pattern matching at least a portion of the reformatted callee identifier.

Referring to FIG. **19**, a data structure for a master list or route list record is shown. Each master list record includes a master list ID field **500**, a dialing code field **502**, a country code field **504**, a national sign number field **506**, a minimum length field **508**, a maximum length field **510**, a national dialled digit field **512**, an international dialled digit field **514** and a buffer rate field **516**.

The master list ID field **500** holds a unique code such as **1019**, for example, identifying the record. The dialing code field **502** holds a predetermined number pattern that the processor **202** of FIG. **7** uses at block **410** in FIG. **8**B to find the master list record having a dialing code matching the first few digits of the amended callee identifier stored in the callee id buffer **211**. The country code field **504** holds a number representing the country code associated with the record and the national sign number field **506** holds a number representing the area code associated with the record. (It will be observed that the dialing code is a combination of the contents of the country code field **504** and the national sign number field **506**.) The minimum length field **508** holds a number representing the minimum length of digits associated with the record and the maximum length field **51** holds a number representing the maximum number of digits in a number with which the record may be compared. The national dialled digit (NDD) field **512** holds a number representing an access code used to make a call within the country specified by the country code, and the international dialled digit (IDD) field **514** holds a number representing the international prefix needed to dial a call from the country indicated by the country code.

Thus, for example, a master list record may have a format as shown in FIG. **20** with exemplary field contents as shown.

Referring back to FIG. **8**B, using the country code and area code portions of the reformatted callee identifier stored in the callee id buffer **211**, block **410** directs the processor **202** of FIG. **7** to find a master list record such as the one shown in FIG. **20** having a dialing code that matches the country code (**1**) and area code (**604**) of the callee identifier. Thus, in this example, the processor (**202**) would find a master list record having an ID field containing the number **1019**. This number may be referred to as a route ID. Thus, a route ID number is found in the master list record associated with a predetermined number pattern in the reformatted callee identifier.

After executing block **410** in FIG. **8**B, the process continues as shown in FIG. **8**D. Referring to FIG. **8**D, block **412** directs the processor **202** of FIG. **7** to use the route ID number to search a database of supplier records associating supplier identifiers with route identifiers to locate at least one supplier record associated with the route identifier to identify at least one supplier operable to supply a communications link for the route.

Referring to FIG. **21**, a data structure for a supplier list record is shown. Supplier list records include a supplier ID field **540**, a master list ID field **542**, an optional prefix field **544**, a specific route identifier field **546**, a NDD/IDD rewrite field **548**, a rate field **550**, and a timeout field **551**. The supplier ID field **540** holds a code identifying the name of the supplier and the master list ID field **542** holds a code for associating the supplier record with a master list record. The prefix field **544** holds a string used to identify the supplier traffic and the specific route identifier field **546** holds an IP address of a gateway operated by the supplier indicated by the supplier ID field **540**. The NDD/IDD rewrite field **548** holds a code representing a rewritten value of the NDD/IDD associated with this route for this supplier, and the rate field **550** holds a code indicating the cost per second to the system operator to use the route provided by the gateway specified by the contents of the route identifier field **546**. The timeout field **551** holds a code indicating a time that the call controller should wait for a response from the associated gateway before giving up and trying the next gateway. This time value may be in seconds, for example. Exemplary supplier records are shown in FIGS. **22**, **23** and **24** for the exemplary suppliers shown at **20** in FIG. **1**, namely Telus, Shaw and Sprint.

Referring back to FIG. **8**D, at block **412** the processor **202** finds all supplier records that identify the master list ID found at block **410** of FIG. **8**B.

Referring back to FIG. **8**D, block **560** directs the processor **202** of FIG. **7** to begin to produce a routing message of the type shown in FIG. **15**. To do this, the processor **202** loads a routing message buffer as shown in FIG. **25** with a supplier prefix of the least costly supplier where the least costly supplier is determined from the rate fields **550** of FIG. **21** of the records associated with respective suppliers.

Referring to FIGS. **22-24**, in the embodiment shown, the supplier "Telus" has the lowest number in the rate field **550** and therefore the prefix **4973** associated with that supplier is loaded into the routing message buffer shown in FIG. **25** first.

Block **562** in FIG. **8**D directs the processor to delimit the prefix **4973** by the number sign (#) and to next load the reformatted callee identifier into the routing message buffer shown in FIG. **25**. At block **563** of FIG. **8**D, the contents of the route identifier field **546** of FIG. **21** of the record associated with the supplier "Telus" are added by the processor **202** of FIG. **7** to the routing message buffer shown in FIG. **25** after an @ sign delimiter, and then block **564** in FIG. **8**D directs the processor to get a time to live value, which in one embodiment may be 3600 seconds, for example. Block **566** then directs the processor **202** to load this time to live value and the timeout value (**551**) in FIG. **21** in the routing message buffer of FIG. **25**. Accordingly, a first part of the routing message for the Telus gateway is shown generally at **570** in FIG. **25**.

Referring back to FIG. **8**D, block **571** directs the processor **202** back to block **560** and causes it to repeat blocks **560**, **562**, **563**, **564** and **566** for each successive supplier until the routing message buffer is loaded with information pertaining to each supplier identified by the processor at block **412**. Thus, a second portion of the routing message as shown at **572** in FIG. **25** relates to the second supplier identified by the record shown in FIG. **23**. Referring back to FIG. **25**, a third portion of the routing message as shown at **574** and is associated with a third supplier as indicated by the supplier record shown in FIG. **24**.

Consequently, referring to FIG. **25**, the routing message buffer holds a routing message identifying a plurality of different suppliers able to provide gateways to the public telephone network (i.e. specific routes) to establish at least part of a communication link through which the caller may contact the callee. In this embodiment, each of the suppliers is identified, in succession, according to rate. Other criteria for determining the order in which suppliers are listed in the routing message may include preferred supplier priorities which may be established based on service agreements, for example.

Referring back to FIG. **8**D, block **568** directs the processor **202** of FIG. **7** to send the routing message shown in FIG. **25** to the call controller **14** in FIG. **1**.

Subscriber to Subscriber Calls within the Same Node

Referring back to FIG. **8**A, if at block **280**, the callee identifier received in the RC request message has a prefix that identifies the same node as that associated with the caller, block **600** directs the processor **202** to use the callee identifier in the callee id buffer **211** to locate and retrieve a dialing profile for the callee. The dialing profile may be of the type shown in FIG. **11** or **12**, for example. Block **602** of FIG. **8**A then directs the processor **202** of FIG. **7** to get call block, call forward and voicemail records from the database **18** of FIG. **1** based on the user name identified in the callee dialing profile retrieved by the processor at block **600**. Call block, call forward and voicemail records may be as shown in FIGS. **26**, **27**, **28** and **30** for example.

Referring to FIG. **26**, the call block records include a user name field **604** and a block pattern field **606**. The user name field holds a user name corresponding to the user name in the user name field (**258** in FIG. **10**) of the callee profile and the block pattern field **606** holds one or more E.164-compatible numbers or user names identifying PSTN numbers or system subscribers from whom the subscriber identified in the user name field **604** does not wish to receive calls.

Referring to FIG. **8**A and FIG. **27**, block **608** directs the processor **202** of FIG. **7** to determine whether or not the caller identifier received in the RC request message matches a block pattern stored in the block pattern field **606** of the call block record associated with the callee identified by the contents of the user name field **604** in FIG. **26**. If the caller identifier matches a block pattern, block **610** directs the processor to send a drop call or non-completion message to the call controller (**14**) and the process is ended. If the caller identifier does not match a block pattern associated with the callee, block **609** directs the processor to store the username and domain of the callee, as determined from the callee dialing profile, and a time to live value in the routing message buffer as shown at **650** in FIG. **32**. Referring back to FIG. **8**A, block **612** then directs the processor **202** to determine whether or not call forwarding is required.

Referring to FIG. **28**, the call forwarding records include a user name field **614**, a destination number field **616**, and a sequence number field **618**. The user name field **614** stores a code representing a user with which the record is associated. The destination number field **616** holds a user name representing a number to which the current call should be forwarded, and the sequence number field **618** holds an integer number indicating the order in which the user name associated with the corresponding destination number field **616** should be attempted for call forwarding. The call forwarding table may have a plurality of records for a given user. The processor **202** of FIG. **7** uses the contents of the sequence number field **618** to place the records for a given user in order. As will be appreciated below, this enables the call forwarding numbers to be tried in an ordered sequence.

Referring to FIG. **8**A and FIG. **29**, if at block **612**, the call forwarding record for the callee identified by the callee identifier contains no contents in the destination number field **616** and accordingly no contents in the sequence number field **618**, there are no call forwarding entries for this callee, and the processor **202** is directed to block **620** in FIG. **8**C. If there are entries in the call forwarding table **27**, block **622** in FIG. **8**A directs the processor **202** to search the dialing profile table to find a dialing profile record as shown in FIG. **9**, for the user identified by the destination number field **616** of the call forward record shown in FIG. **28**. The processor **202** of FIG. **7** is further directed to store the username and domain for that user and a time to live value in the routing message buffer as shown at **652** in FIG. **32**, to produce a routing message as illustrated. This process is repeated for each call forwarding record associated with the callee identified by the callee id buffer **211** in FIG. **7** to add to the routing message buffer all call forwarding usernames and domains associated with the callee.

Referring back to FIG. **8**A, if at block **612** there are no call forwarding records, then at block **620** in FIG. **8**C the processor **202** is directed to determine whether or not the user identified by the callee identifier has paid for voicemail service. This is done by checking to see whether or not a flag is set in a voicemail record of the type shown in FIG. **30** in a voicemail table stored in the database **18** shown in FIG. **1**.

Referring to FIG. **30**, voicemail records in this embodiment may include a user name field **624**, a voicemail server field **626**, a seconds to voicemail field **628** and an enable field **630**. The user name field **624** stores the user name of the callee. The voicemail server field **626** holds a code identifying a domain name of a voicemail server associated with the user identified by the user name field **624**. The seconds to voicemail field **628** holds a code identifying the time to wait before engaging voicemail, and the enable field **630** holds a code representing whether or not voicemail is enabled for the user. Referring back to FIG. **8**C, at block **620** if the processor **202** of FIG. **7** finds a voicemail record as shown in FIG. **30** having user name field **624** contents matching the callee identifier, the processor is directed to examine the contents of the enabled field **630** to determine whether or not voicemail is enabled. If voicemail is enabled, then block **640** in FIG. **8**C directs the processor **202** to FIG. **7** to store the contents of the voicemail server field **626** and the contents of the seconds to voicemail field **628** in the routing message buffer, as shown at **654** in FIG. **32**. Block **642** then directs the processor **202** to get time to live values for each path specified by the routing message according to the cost of routing and the user's balance. These time to live values are then appended to corresponding paths already stored in the routing message buffer.

Referring back to FIG. **8**C, block **644** then directs the processor **202** of FIG. **7** to store the IP address of the current node in the routing message buffer as shown at **656** in FIG. **32**. Block **646** then directs the processor **202** to send the routing message shown in FIG. **32** to the call controller **14** in FIG. **1**. Thus in the embodiment described the routing controller will produce a routing message that will cause at least one of the following: forward the call to another party, block the call and direct the caller to a voicemail server.

Referring back to FIG. **1**, the routing message whether of the type shown in FIG. **16**, **25** or **32**, is received at the call controller **14** and the call controller interprets the receipt of the routing message as a request to establish a call.

Referring to FIG. **4**, the program memory **104** of the call controller **14** includes a routing to gateway routine depicted generally at **122**.

Where a routing message of the type shown in FIG. **32** is received by the call controller **14**, the routing to gateway routine **122** shown in FIG. **4** may direct the processor **102** cause a message to be sent back through the internet **13** shown in FIG. **1** to the callee telephone **15**, knowing the IP address of the callee telephone **15** from the user name.

Alternatively, if the routing message is of the type shown in FIG. **16**, which identifies a domain associated with another node in the system, the call controller may send a SIP invite message along the high speed backbone **17** connected to the other node. The other node functions as explained above, in response to receipt of a SIP invite message.

If the routing message is of the type shown in FIG. **25** where there are a plurality of gateway suppliers available, the call controller sends a SIP invite message to the first supplier,

in this case Telus, using a dedicated line or an internet connection to determine whether or not Telus is able to handle the call. If the Telus gateway returns a message indicating it is not able to handle the call, the call controller **14** then proceeds to send a SIP invite message to the next supplier, in this case Shaw. The process is repeated until one of the suppliers responds indicating that it is available to carry the call. Once a supplier responds indicating that it is able to carry the call, the supplier sends back to the call controller **14** an IP address for a gateway provided by the supplier through which the call or audio path of the call will be carried. This IP address is sent in a message from the call controller **14** to the media relay **9** which responds with a message indicating an IP address to which the caller telephone should send its audio/video, traffic and an IP address to which the gateway should send its audio/video for the call. The call controller conveys the IP address at which the media relay expects to receive audio/video from the caller telephone, to the caller telephone **12** in a message. The caller telephone replies to the call controller with an IP address at which it would like to receive audio/video and the call controller conveys that IP address to the media relay. The call may then be conducted between the caller and callee through the media relay and gateway.

Referring back to FIG. **1**, if the call controller **14** receives a routing message of the type shown in FIG. **32**, and which has at least one call forwarding number and/or a voicemail number, the call controller attempts to establish a call to the callee telephone **15** by seeking from the callee telephone a message indicating an IP address to which the media relay should send audio/video. If no such message is received from the callee telephone, no call is established. If no call is established within a pre-determined time, the call controller **14** attempts to establish a call with the next user identified in the call routing message in the same manner. This process is repeated until all call forwarding possibilities have been exhausted, in which case the call controller communicates with the voicemail server **19** identified in the routing message to obtain an IP address to which the media relay should send audio/video and the remainder of the process mentioned above for establishing IP addresses at the media relay **9** and the caller telephone is carried out to establish audio/video paths to allowing the caller to leave a voicemail message with the voicemail server.

When an audio/video path through the media relay is established, a call timer maintained by the call controller **14** logs the start date and time of the call and logs the call ID and an identification of the route (i.e., audio/video path IP address) for later use in billing.

Time to Live

Referring to FIGS. **33**A and **33**B, a process for determining a time to live value for any of blocks **642** in FIG. **8**C, **350** in FIG. **8**A or **564** in FIG. **8**D above is described. The process is executed by the processor **202** shown in FIG. **7**. Generally, the process involves calculating a cost per unit time, calculating a first time value as a sum of a free time attributed to a participant in the communication session and the quotient of a funds balance held by the participant to the cost per unit time value and producing a second time value in response to the first time value and a billing pattern associated with the participant, the billing pattern including first and second billing intervals and the second time value being the time to permit a communication session to be conducted.

Referring to FIG. **33**A, in this embodiment, the process begins with a first block **700** that directs the RC processor to determine whether or not the call type set at block **302** in FIG. **8**A indicates the call is a network or cross-domain call. If the call is a network or cross-domain call, block **702** of FIG. **33**A directs the RC processor to set the time to live equal to 99999 and the process is ended. Thus, the network or cross-domain call type has a long time to live. If at block **700** the call type is determined not to be a network or cross-domain type, block **704** directs the RC processor to get a subscriber bundle table record from the database **18** in FIG. **1** and store it locally in the subscriber bundle record buffer at the RC **14**.

Referring to FIG. **34**, a subscriber bundle table record is shown generally at **706**. The record includes a user name field **708** and a services field **710**. The user name field **708** holds a code identifying the subscriber user name and the services field **710** holds codes identifying service features assigned to the subscriber, such as free local calling, call blocking and voicemail, for example.

FIG. **35** shows an exemplary subscriber bundle record for the Vancouver caller. In this record the user name field **708** is loaded with the user name 2001 1050 8667 and the services field **710** is loaded with codes **10**, **14** and **16** corresponding to free local calling, call blocking and voicemail, respectively. Thus, user 2001 1050 8667 has free local calling, call blocking and voicemail features.

Referring back to FIG. **33**A, after having loaded a subscriber bundle record into the subscriber bundle record buffer, block **712** directs the RC processor to search the database (**18**) determine whether or not there is a bundle override table record for the master list ID value that was determined at block **410** in FIG. **8**B. An exemplary bundle override table record is shown at **714** in FIG. **36**. The bundle table record includes a master list ID field **716**, an override type field **718**, an override value field **720** a first interval field **722** and a second interval field **724**. The master list ID field **716** holds a master list ID code. The override type field **718** holds an override type code indicating a fixed, percent or cent amount to indicate the amount by which a fee will be increased. The override value field **720** holds a real number representing the value of the override type. The first interval field **722** holds a value indicating the minimum number of seconds for a first level of charging and the second interval field **724** holds a number representing a second level of charging.

Referring to FIG. **37**, a bundle override record for the located master list ID code is shown generally at **726** and includes a master list ID field **716** holding the code **1019** which was the code located in block **410** of FIG. **8**B. The override type field **718** includes a code indicating the override type is a percentage value and the override value field **720** holds the value 10.0 indicating that the override will be 10.0% of the charged value. The first interval field **722** holds a value representing 30 seconds and the second interval field **724** holds a value representing 6 seconds. The 30 second value in the first interval field **722** indicates that charges for the route will be made at a first rate for 30 seconds and thereafter the charges will be made at a different rate in increments of 6 seconds, as indicated by the contents of the second interval field **724**.

Referring back to FIG. **33**A, if at block **712** the processor finds a bundle override record of the type shown in FIG. **37**, block **728** directs the processor to store the bundle override record in local memory. In the embodiment shown, the bundle override record shown in FIG. **37** is stored in the bundle override record buffer at the RC as shown in FIG. **7**. Still referring to FIG. **33**A, block **730** then directs the RC processor to determine whether or not the subscriber bundle table record **706** in FIG. **35** has a services field including a code identifying that the user is entitled to free local calling and also directs the processor to determine whether or not the call type is not a cross domain cell, i.e. it is a local or local/national style. If both of these conditions are satisfied, block **732**

directs the processor to set the time to live equal to 99999, giving the user a long period of time for the call. The process is then ended. If the conditions associated with block **730** are not satisfied, block **734** of FIG. **33**B directs the RC processor to retrieve a subscriber account record associated with a participant in the call. This is done by copying and storing in the subscriber account record buffer a subscriber account record for the caller.

Referring to FIG. **38**, an exemplary subscriber account table record is shown generally at **736**. The record includes a user name field **738**, a funds balance field **740** and a free time field **742**. The user name field **738** holds a subscriber user name, the funds balance field **740** holds a real number representing the dollar value of credit available to the subscriber and the free time field **742** holds an integer representing the number of free seconds that the user is entitled to.

An exemplary subscriber account record for the Vancouver caller is shown generally at **744** in FIG. **39**, wherein the user name field **738** holds the user name 2001 1050 8667, the funds balance field **740** holds the value $10.00, and the free time field **742** holds the value 100. The funds balance field holding the value of $10.00 indicates the user has $10.00 worth of credit and the free time field having the value of 100 indicates that the user has a balance of 100 free seconds of call time.

Referring back to FIG. **33**B, after copying and storing the subscriber account record shown in FIG. **39** from the database to the subscriber account record buffer RC, block **746** directs the processor to determine whether or not the subscriber account record funds balance field **740** or free time field **742** are greater than zero. If they are not greater than zero, block **748** directs the processor to set the time to live equal to zero and the process is ended. The RC then sends a message back to the call controller to cause the call controller to deny the call to the caller. If the conditions associated with block **746** are satisfied, block **750** directs the processor to calculate the call cost per unit time. A procedure for calculating the call cost per unit time is described below in connection with FIG. **41**.

Assuming the procedure for calculating the cost per second returns a number representing the call cost per second, block **752** directs the processor **202** in FIG. **7** to determine whether or not the cost per second is equal to zero. If so, block **754** directs the processor to set the time to live to 99999 to give the caller a very long length of call and the process is ended.

If at block **752** the call cost per second is not equal to zero, block **756** directs the processor **202** in FIG. **7** to calculate a first time to live value as a sum of a free time attributed to the participant in the communication session and the quotient of the funds balance held by the participant to the cost per unit time value. To do this, the processor **202** of FIG. **7** is directed to set a first time value or temporary time to live value equal to the sum of the free time provided in the free time field **742** of the subscriber account record shown in FIG. **39** and the quotient of the contents of the funds balance field **740** in the subscriber account record for the call shown in FIG. **39** and the cost per second determined at block **750** of FIG. **33**B. Thus, for example, if at block **750** the cost per second is determined to be three cents per second and the funds balance field holds the value $10.00, the quotient of the funds balance and cost per second is 333 seconds and this is added to the contents of the free time field **742**, which is 100, resulting in a time to live of 433 seconds.

Block **758** then directs the RC processor to produce a second time value in response to the first time value and the billing pattern associated with the participant as established by the bundle override record shown in FIG. **37**. This process is shown in greater detail at **760** in FIG. **40** and generally involves producing a remainder value representing a portion of the second billing interval remaining after dividing the second billing interval into a difference between the first time value and the first billing interval.

Referring to FIG. **40**, the process for producing the second time value begins with a first block **762** that directs the processor **202** in FIG. **7** to set a remainder value equal to the difference between the time to live value calculated at block **756** in FIG. **33**B and the contents of the first interval field **722** of the record shown in FIG. **37**, multiplied by the modulus of the contents of the second interval field **724** of FIG. **37**. Thus, in the example given, the difference between the time to live field and the first interval field is 433 minus 30, which is 403 and therefore the remainder produced by the mod of 403 divided by 6 is 0.17. Block **764** then directs the processor to determine whether or not this remainder value is greater than zero and, if so, block **766** directs the processor to subtract the remainder from the first time value and set the difference as the second time value. To do this the processor is directed to set the time to live value equal to the current time to live of 403 minus the remainder of 1, i.e., 402 seconds. The processor is then returned back to block **758** of FIG. **33**B.

Referring back to FIG. **40**, if at block **764** the remainder is not greater than zero, block **768** directs the processor **202** of FIG. **7** to determine whether or not the time to live is less than the contents of the first interval field **722** in the record shown in FIG. **37**. If so, then block **770** of FIG. **40** directs the processor to set the time to live equal to zero. Thus, the second time value is set to zero when the remainder is greater than zero and the first time value is less than the free time associated with the participant in the call. If at block **768** the conditions of that block are not satisfied, the processor returns the first time to live value as the second time to live value.

Thus, referring to FIG. **33**B, after having produced a second time to live value, block **772** directs the processor to set the time to live value for use in blocks **342**, **350** or **564**.

Cost Per Second

Referring back to FIG. **33**B, at block **750** it was explained that a call cost per unit time is calculated. The following explains how that call cost per unit time value is calculated.

Referring to FIG. **41**, a process for calculating a cost per unit time is shown generally at **780**. The process is executed by the processor **202** in FIG. **7** and generally involves locating a record in a database, the record comprising a markup type indicator, a markup value and a billing pattern and setting a reseller rate equal to the sum of the markup value and the buffer rate, locating at least one of an override record specifying a route cost per unit time amount associated with a route associated with the communication session, a reseller record associated with a reseller of the communications session, the reseller record specifying a reseller cost per unit time associated with the reseller for the communication session and a default operator markup record specifying a default cost per unit time and setting as the cost per unit time the sum of the reseller rate and at least one of the route cost per unit time, the reseller cost per unit time and the default cost per unit time.

The process begins with a first set of blocks **782**, **802** and **820** which direct the processor **202** in FIG. **7** to locate at least one of a record associated with a reseller and a route associated with the reseller, a record associated with the reseller, and a default reseller mark-up record. Block **782**, in particular, directs the processor to address the database **18** to look for a record associated with a reseller and a route with the reseller by looking for a special rate record based on the master list ID established at block **410** in FIG. **8**C.

Referring to FIG. **42**, a system operator special rate table record is shown generally at **784**. The record includes a reseller field **786**, a master list ID field **788**, a mark-up type field **790**, a mark-up value field **792**, a first interval field **794** and a second interval field **796**. The reseller field **786** holds a reseller ID code and the master list ID field **788** holds a master list ID code. The mark-up type field **790** holds a mark-up type such as fixed percent or cents and the mark-up value field **792** holds a real number representing the value corresponding to the mark-up type. The first interval field **794** holds a number representing a first level of charging and the second interval field **796** holds a number representing a second level of charging.

An exemplary system operator special rate table for a reseller known as "Klondike" is shown at **798** in FIG. **43**. In this record, the reseller field **786** holds a code indicating the retailer ID is Klondike, the master list ID field **788** holds the code **1019** to associate the record with the master list ID code **1019**. The mark-up type field **790** holds a code indicating the mark-up type is cents and the mark-up value field **792** holds a mark-up value indicating 1/10 of one cent. The first interval field **794** holds the value 30 and the second interval field **796** holds the value 6, these two fields indicating that the operator allows 30 seconds for free and then billing is done in increments of 6 seconds after that.

Referring back to FIG. **41**, if at block **782** a record such as the one shown in FIG. **43** is located in the system operator special rates table, the processor is directed to block **800** in FIG. **41**. If such a record is not found in the system operator special rates table, block **802** directs the processor to address the database **18** to look in a system operator mark-up table for a mark-up record associated with the reseller.

Referring to FIG. **44**, an exemplary system operator mark-up table record is shown generally at **804**. The record includes a reseller field **806**, a mark-up type field **808**, a mark-up value field **810**, a first interval field **812** and a second interval field **814**. The reseller mark-up type, mark-up value, first interval and second interval fields are as described in connection with the fields by the same names in the system operator special rates table shown in FIG. **42**.

FIG. **45** provides an exemplary system operator mark-up table record for the reseller known as Klondike and therefore the reseller field **806** holds the value "Klondike", the mark-up type field **808** holds the value cents, the mark-up value field holds the value 0.01, the first interval field **812** holds the value 30 and the second interval field **814** holds the value 6. This indicates that the reseller "Klondike" charges by the cent at a rate of one cent per minute. The first 30 seconds of the call are free and billing is charged at the rate of one cent per minute in increments of 6 seconds.

FIG. **46** provides an exemplary system operator mark-up table record for cases where no specific system operator mark-up table record exists for a particular reseller, i.e., a default reseller mark-up record. This record is similar to the record shown in FIG. **45** and the reseller field **806** holds the value "all", the mark-up type field **808** is loaded with a code indicating mark-up is based on a percentage, the mark-up value field **810** holds the percentage by which the cost is marked up, and the first and second interval fields **812** and **814** identify first and second billing levels.

Referring back to FIG. **41**, if at block **802** a specific mark-up record for the reseller identified at block **782** is not located, block **820** directs the processor to get the mark-up record shown in FIG. **46**, having the "all" code in the reseller field **806**. The processor is then directed to block **800**.

Referring back to FIG. **41**, at block **800**, the processor **202** of FIG. **7** is directed to set a reseller rate equal to the sum of the mark-up value of the record located by blocks **782**, **802** or **820** and the buffer rate specified by the contents of the buffer rate field **516** of the master list record shown in FIG. **20**. To do this, the RC processor sets a variable entitled "reseller cost per second" to a value equal to the sum of the contents of the mark-up value field (**792**, **810**) of the associated record, plus the contents of the buffer rate field (**516**) from the master list record associated with the master list ID. Then, block **822** directs the processor to set a system operator cost per second variable equal to the contents of the buffer rate field (**516**) from the master list record. Block **824** then directs the processor to determine whether the call type flag indicates the call is local or national/local style and whether the caller has free local calling. If both these conditions are met, then block **826** sets the user cost per second variable equal to zero and sets two increment variables equal to one, for use in later processing. The cost per second has thus be calculated and the process shown in FIG. **41** is ended.

If at block **824** the conditions of that block are not met, the processor **202** of FIG. **7** is directed to locate at least one of a bundle override table record specifying a route cost per unit time associated with a route associated with the communication session, a reseller special destinations table record associated with a reseller of the communications session, the reseller record specifying a reseller cost per unit time associated with the reseller for the communication session and a default reseller global markup record specifying a default cost per unit time.

To do this block **828** directs the processor **202** of FIG. **7** to determine whether or not the bundle override record **726** in FIG. **37** located at block **712** in FIG. **33**A has a master list ID equal to the stored master list ID that was determined at block **410** in FIG. **8**B. If not, block **830** directs the processor to find a reseller special destinations table record in a reseller special destinations table in the database (**18**), having a master list ID code equal to the master list ID code of the master list ID that was determined at block **410** in FIG. **8**B. An exemplary reseller special destinations table record is shown in FIG. **47** at **832**. The reseller special destinations table record includes a reseller field **834**, a master list ID field **836**, a mark-up type field **838**, a mark-up value field **840**, a first interval field **842** and a second interval field **844**. This record has the same format as the system operator special rates table record shown in FIG. **42**, but is stored in a different table to allow for different mark-up types and values and time intervals to be set according to resellers' preferences. Thus, for example, an exemplary reseller special destinations table record for the reseller "Klondike" is shown at **846** in FIG. **48**. The reseller field **834** holds a value indicating the reseller as the reseller "Klondike" and the master list ID field holds the code **1019**. The mark-up type field **838** holds a code indicating the mark-up type is percent and the mark-up value field **840** holds a number representing the mark-up value as 5%. The first and second interval fields identify different billing levels used as described earlier.

Referring back to FIG. **41**, the record shown in FIG. **48** may be located at block **830**, for example. If at block **830** such a record is not found, then block **832** directs the processor to get a default operator global mark-up record based on the reseller ID.

Referring to FIG. **49**, an exemplary default reseller global mark-up table record is shown generally at **848**. This record includes a reseller field **850**, a mark-up type field **852**, a mark-up value field **854**, a first interval field **856** and a second interval field **858**. The reseller field **850** holds a code identifying the reseller. The mark-up type field **852**, the mark-up value field **854** and the first and second interval fields **856** and

858 are of the same type as described in connection with fields of the same name in FIG. 47, for example. The contents of the fields of this record 860 may be set according to system operator preferences, for example.

Referring to FIG. 50, an exemplary reseller global mark-up table record is shown generally at 860. In this record, the reseller field 850 holds a code indicating the reseller is "Klondike", the mark-up type field 852 holds a code indicating the mark-up type is percent, the mark-up value field 854 holds a value representing 10% as the mark-up value, the first interval field 856 holds the value 30 and the second interval field 858 holds the values 30 and 6 respectively to indicate the first 30 seconds are free and billing is to be done in 6 second increments after that.

Referring back to FIG. 41, should the processor get to block 832, the reseller global mark-up table record as shown in FIG. 50 is retrieved from the database and stored locally at the RC. As seen in FIG. 41, it will be appreciated that if the conditions are met in blocks 828 or 830, or if the processor executes block 832, the processor is then directed to block 862 which causes it to set an override value equal to the contents of the mark-up value field of the located record, to set the first increment variable equal to the contents of the first interval field of the located record and to set the second increment variable equal to the contents of the second interval field of the located record. (The increment variables were alternatively set to specific values at block 826 in FIG. 41.)

It will be appreciated that the located record could be a bundle override record of the type shown in FIG. 37 or the located record could be a reseller special destination record of the type shown in FIG. 48 or the record could be a reseller global mark-up table record of the type shown in FIG. 50. After the override and first and second increment variables have been set at block 862, the processor 202 if FIG. 7 is directed to set as the cost per unit time the sum of the reseller rate and at least one of the route cost per unit time, the reseller cost per unit time and the default cost per unit time, depending on which record was located. To do this, block 864 directs the processor to set the cost per unit time equal to the sum of the reseller cost set at block 800 in FIG. 41, plus the contents of the override variable calculated in block 862 in FIG. 41. The cost per unit time has thus been calculated and it is this cost per unit time that is used in block 752 of FIG. 33B, for example.

Terminating the Call

In the event that either the caller or the callee terminates a call, the telephone of the terminating party sends a SIP bye message to the controller 14. An exemplary SIP bye message is shown at 900 in FIG. 51 and includes a caller field 902, a callee field 904 and a call ID field 906. The caller field 902 holds a twelve digit user name, the callee field 904 holds a PSTN compatible number or user name, and the call ID field 906 holds a unique call identifier field of the type shown in the call ID field 65 of the SIP invite message shown in FIG. 3.

Thus, for example, referring to FIG. 52, a SIP bye message for the Calgary callee is shown generally at 908 and the caller field 902 holds a user name identifying the caller, in this case 2001 1050 8667, the callee field 904 holds a user name identifying the Calgary callee, in this case 2001 1050 2222, and the call ID field 906 holds the code FA10 @ 192.168.0.20, which is the call ID for the call.

The SIP bye message shown in FIG. 52 is received at the call controller 14 and the call controller executes a process as shown generally at 910 in FIG. 53. The process includes a first block 912 that directs the call controller processor 202 of FIG. 7 to copy the caller, callee and call ID field contents from the SIP bye message received from the terminating party to corresponding fields of an RC stop message buffer (not shown). Block 914 then directs the processor to copy the call start time from the call timer and to obtain a call stop time from the call timer. Block 916 then directs the call controller to calculate a communication session time by determining the difference in time between the call start time and the call stop time. This session time is then stored in a corresponding field of the RC call stop message buffer. Block 917 then directs the processor to decrement the contents of the current concurrent call field 277 of the dialing profile for the caller as shown in FIG. 10, to indicate that there is one less concurrent call in progress. A copy of the amended dialing profile for the caller is then stored in the database 18 of FIG. 1. Block 918 then directs the processor to copy the route from the call log. An RC call stop message produced as described above is shown generally at 1000 in FIG. 54. An RC call stop message specifically associated with the call made to the Calgary callee is shown generally at 1020 in FIG. 55.

Referring to FIG. 54, the RC stop call message includes a caller field 1002, callee field 1004, a call ID field 1006, an account start time field 1008, an account stop time field 1010, a communication session time 1012 and a route field 1014. The caller field 1002 holds a username, the callee field 1004 holds a PSTN-compatible number or system number, the call ID field 1006 hold the unique call identifier received from the SIP invite message shown in FIG. 3, the account start time field 1008 holds the date and start time of the call, the account stop time field 1010 holds the date and time the call ended, the communication session time field 1012 holds a value representing the difference between the start time and the stop time, in seconds, and the route field 1014 holds the IP address for the communications link that was established.

Referring to FIG. 55, an exemplary RC stop call message for the Calgary callee is shown generally at 1020. In this example the caller field 1002 holds the user name 2001 1050 8667 identifying the Vancouver-based caller and the callee field 1004 holds the user name 2001 1050 2222 identifying the Calgary callee. The contents of the call ID field 1006 are FA10 @ 192.168.0.20. The contents of the account start time field 1008 are 2006-12-30 12:12:12 and the contents of the account stop time field are 2006-12-30 12:12:14. The contents of the communication session time field 1012 are 2 to indicate 2 seconds call duration and the contents of the route field are 72.64.39.58.

Referring back to FIG. 53, after having produced an RC call stop message, block 920 directs the processor 202 in FIG. 7 to send the RC stop message compiled in the RC call stop message buffer to the RC 16 of FIG. 1. Block 922 directs the call controller 14 to send a "bye" message back to the party that did not terminate the call.

The RC 16 of FIG. 1 receives the call stop message and an RC call stop message process is invoked at the RC, the process being shown at 950 in FIGS. 56A, 56B and 56C. Referring to FIG. 56A, the RC stop message process 950 begins with a first block 952 that directs the processor 202 in FIG. 7 to determine whether or not the communication session time is less than or equal to the first increment value set by the cost calculation routine shown in FIG. 41, specifically blocks 826 or 862 thereof. If this condition is met, then block 954 of FIG. 56A directs the RC processor to set a chargeable time variable equal to the first increment value set at block 826 or 862 of FIG. 41. If at block 952 of FIG. 56A the condition is not met, block 956 directs the RC processor to set a remainder variable equal to the difference between the communication session time and the first increment value mod the second increment value produced at block 826 or 862 of FIG. 41. Then, the processor is directed to block 958 of FIG. 56A which directs

it to determine whether or not the remainder is greater than zero. If so, block **960** directs the RC processor to set the chargeable time variable equal to the difference between the communication session time and the remainder value. If at block **958** the remainder is not greater than zero, block **962** directs the RC processor to set the chargeable time variable equal to the contents of the communication session time from the RC stop message. The processor is then directed to block **964**. In addition, after executing block **954** or block **960**, the processor is directed to block **964**.

Block **964** directs the processor **202** of FIG. **7** to determine whether or not the chargeable time variable is greater than or equal to the free time balance as determined from the free time field **742** of the subscriber account record shown in FIG. **39**. If this condition is satisfied, block **966** of FIG. **56**A directs the processor to set the free time field **742** in the record shown in FIG. **39**, to zero. If the chargeable time variable is not greater than or equal to the free time balance, block **968** directs the RC processor to set a user cost variable to zero and Block **970** then decrements the free time field **742** of the subscriber account record for the caller by the chargeable time amount determined by block **954**, **960** or **962**.

If at Block **964** the processor **202** of FIG. **7** was directed to Block **966** which causes the free time field (**742** of FIG. **39**) to be set to zero, referring to FIG. **56**B, Block **972** directs the processor to set a remaining chargeable time variable equal to the difference between the chargeable time and the contents of the free time field (**742** of FIG. **39**). Block **974** then directs the processor to set the user cost variable equal to the product of the remaining chargeable time and the cost per second calculated at Block **750** in FIG. **33**B. Block **976** then directs the processor to decrement the funds balance field (**740**) of the subscriber account record shown in FIG. **39** by the contents of the user cost variable calculated at Block **974**.

After completing Block **976** or after completing Block **970** in FIG. **56**A, block **978** of FIG. **56**B directs the processor **202** of FIG. **7** to calculate a reseller cost variable as the product of the reseller rate as indicated in the mark-up value field **810** of the system operator mark-up table record shown in FIG. **45** and the communication session time determined at Block **916** in FIG. **53**. Then, Block **980** of FIG. **56**B directs the processor to add the reseller cost to the reseller balance field **986** of a reseller account record of the type shown in FIG. **57** at **982**.

The reseller account record includes a reseller ID field **984** and the aforementioned reseller balance field **986**. The reseller ID field **984** holds a reseller ID code, and the reseller balance field **986** holds an accumulated balance of charges.

Referring to FIG. **58**, a specific reseller accounts record for the reseller "Klondike" is shown generally at **988**. In this record the reseller ID field **984** holds a code representing the reseller "Klondike" and the reseller balance field **986** holds a balance of $100.02. Thus, the contents of the reseller balance field **986** in FIG. **58** are incremented by the reseller cost calculated at block **978** of FIG. **56**B.

Still referring to FIG. **56**B, after adding the reseller cost to the reseller balance field as indicated by Block **980**, Block **990** directs the processor to **202** of FIG. **7** calculate a system operator cost as the product of the system operator cost per second, as set at block **822** in FIG. **41**, and the communication session time as determined at Block **916** in FIG. **53**. Block **992** then directs the processor to add the system operator cost value calculated at Block **990** to a system operator accounts table record of the type shown at **994** in FIG. **59**. This record includes a system operator balance field **996** holding an accumulated charges balance. Referring to FIG. **60** in the embodiment described, the system operator balance field **996** may hold the value $1,000.02 for example, and to this value the system operator cost calculated at Block **990** is added when the processor executes Block **992** of FIG. **56**B.

Ultimately, the final reseller balance **986** in FIG. **58** holds a number representing an amount owed to the reseller by the system operator and the system operator balance **996** of FIG. **59** holds a number representing an amount of profit for the system operator.

While specific embodiments of the invention have been described and illustrated, such embodiments should be considered illustrative of the invention only and not as limiting the invention as construed in accordance with the accompanying claims.

What is claimed is:

**1**. A process for operating a call routing controller to facilitate communication between callers and callees in a system comprising a plurality of nodes with which callers and callees are associated, the process comprising:

in response to initiation of a call by a calling subscriber, receiving a caller identifier and a callee identifier;

locating a caller dialing profile comprising a username associated with the caller and a plurality of calling attributes associated with the caller;

determining a match when at least one of said calling attributes matches at least a portion of said callee identifier;

classifying the call as a public network call when said match meets public network classification criteria and classifying the call as a private network call when said match meets private network classification criteria;

when the call is classified as a private network call, producing a private network routing message for receipt by a call controller, said private network routing message identifying an address, on the private network, associated with the callee;

when the call is classified as a public network call, producing a public network routing message for receipt by the call controller, said public network routing message identifying a gateway to the public network.

**2**. The process of claim **1** further comprising receiving a request to establish a call, from a call controller in communication with a caller identified by said callee identifier.

**3**. The process of claim **1** wherein determining said match comprises determining said match when said callee identifier includes a portion that matches an International Dialing Digit (IDD) associated with said caller dialing profile.

**4**. The process of claim **1** wherein determining said match comprises determining said match when said callee identifier includes a portion that matches a National Dialing Digit (NDD) associated with said caller dialing profile.

**5**. The process of claim **1** wherein determining said match comprises determining said match when said callee identifier includes a portion that matches an area code associated with said caller dialing profile.

**6**. The process of claim **1** wherein determining said match comprises determining said match when said callee identifier has a length within a range specified in said caller dialing profile.

**7**. The process of claim **1** further comprising formatting said callee identifier into a pre-defined digit format to produce a re-formatted callee identifier.

**8**. The process of claim **7** wherein formatting comprises removing an international dialing digit from said callee identifier, when said callee identifier begins with a digit matching an international dialing digit specified by said caller dialing profile associated with said caller.

**9**. The process of claim **7** wherein formatting comprises removing a national dialing digit from said callee identifier

and prepending a caller country code to said callee identifier when said callee identifier begins with a national dialing digit.

**10**. The process of claim **7** wherein formatting comprises prepending a caller country code to said callee identifier when said callee identifier begins with digits identifying an area code specified by said caller dialing profile.

**11**. The process of claim **7** wherein formatting comprises prepending a caller country code and area code to said callee identifier when said callee identifier has a length that matches a caller dialing number format specified by said caller dialing profile and only one area code is specified as being associated with said caller in said caller dialing profile.

**12**. The process of claim **7** wherein classifying comprises classifying said call as a private network call when said re-formatted callee identifier identifies a subscriber to the private network.

**13**. The process of claim **7** wherein classifying comprises determining whether said callee identifier complies with a pre-defined username format and, if so, classifying the call as a private network call.

**14**. The process of claim **7** further comprising, causing a database of records to be searched to locate a Direct-Inward-Dial (DID) bank table record associating a public telephone number with said reformatted callee identifier and if said DID bank table record is found, classifying the call as a private network call and if a DID bank table record is not found classifying the call as a public network call.

**15**. The process of claim **14** wherein producing said private network routing message identifying a node on the private network comprises setting a callee identifier in response to a username associated with said DID bank table record.

**16**. The process of claim **15** wherein producing said private network routing message comprises determining whether a node associated with the reformatted callee identifier is the same as a node associated the caller identifier.

**17**. The process of claim **16** wherein determining whether a node associated with the reformatted callee identifier is the same as a node associated with the caller identifier comprises determining whether a prefix of said re-formatted callee identifier matches a corresponding prefix of a username associated with said caller dialing profile.

**18**. The process of claim **17** wherein when said node associated with said caller is not the same as the node associated with the callee, producing a routing message including said caller identifier, said reformatted callee identifier and an identification of a private network node associated with said callee and communicating said routing message to a call controller.

**19**. The process of claim **16** wherein when said node associated with said caller identifier is the same as the node associated with said callee identifier, determining whether to perform at least one of the following: forward said call to another party, block the call and direct the caller to a voicemail server associated with the callee.

**20**. The process of claim **19** wherein producing said private network routing message comprises producing a routing message having an identification of at least one of the callee identifier, an identification of a party to whom the call should be forwarded and an identification of a voicemail server associated with the callee.

**21**. The process of claim **20** further comprising communicating said routing message to a call controller.

**22**. The process of claim **7** wherein producing said public network routing message identifying a gateway to the public network comprises searching a database of route records associating route identifiers with dialing codes to find a route record having a dialing code having a number pattern matching at least a portion of said reformatted callee identifier.

**23**. The process of claim **22** further comprising searching a database of supplier records associating supplier identifiers with said route identifiers to locate at least one supplier record associated with said route identifier associated with said route record having a dialing code having a number pattern matching at least a portion of said reformatted callee identifier.

**24**. The process of claim **23** further comprising loading a routing message buffer with the reformatted callee identifier and an identification of specific routes associated respective ones of the supplier records associated with said route record and loading said routing message buffer with a time value and a timeout value.

**25**. The process of claim **24** wherein said public network routing message comprises the contents of said routing message buffer and wherein said process comprises communicating said public network routing message to a call controller.

**26**. The process of claim **1** further comprising causing said dialing profile to include a maximum concurrent call value and a concurrent call count value and causing said concurrent call count value to be incremented when the user associated with said dialing profile initiates a call and causing said concurrent call count value to be decremented when a call with said user associated with said dialing profile is ended.

**27**. A non-transitory computer readable medium encoded with codes for directing a processor to execute a method of operating a call routing controller to facilitate communication between callers and callees in a system comprising a plurality of nodes with which callers and callees are associated, the method comprising:

in response to initiation of a call by a calling subscriber, receiving a caller identifier and a callee identifier;

locating a caller dialing profile comprising a username associated with the caller and a plurality of calling attributes associated with the caller;

determining a match when at least one of said calling attributes matches at least a portion of said callee identifier;

classifying the call as a public network call when said match meets public network classification criteria and classifying the call as a private network call when said match meets private network classification criteria;

when the call is classified as a private network call, producing a private network routing message for receipt by a call controller, said private network routing message identifying an address, on the private network, associated with the callee; and

when the call is classified as a public network call, producing a public network routing message for receipt by a call controller, said public network routing message identifying a gateway to the public network.

**28**. A call routing apparatus for facilitating communications between callers and callees in a system comprising a plurality of nodes with which callers and callees are associated, the apparatus comprising:

receiving means for receiving a caller identifier and a callee identifier, in response to initiation of a call by a calling subscriber;

means for locating a caller dialing profile comprising a username associated with the caller and a plurality of calling attributes associated with the caller;

means for determining a match when at least one of said calling attributes matches at least a portion of said callee identifier;

means for classifying the call as a public network call when said match meets public network classification criteria;

means for classifying the call as a private network call when said match meets private network classification criteria;

means for producing a private network routing message for receipt by a call controller, when the call is classified as a private network call, said private network routing message identifying an address, on the private network, associated with the callee; and

means for producing a public network routing message for receipt by a call controller, when the call is classified as a public network call, said public network routing message identifying a gateway to the public network.

**29**. The apparatus of claim **28** wherein said receiving means is operably configured to receive a request to establish a call, from a call controller in communication with a caller identified by said callee identifier.

**30**. The apparatus of claim **28** wherein said calling attributes include an international dialing digit and wherein said means for determining is operably configured to determine whether said callee identifier includes a portion that matches an International Dialing Digit (IDD) associated with said caller dialing profile.

**31**. The apparatus of claim **28** wherein said calling attributes include a national dialing digit and wherein said means for determining is operably configured to determine whether said callee identifier includes a portion that matches a National Dialing Digit (NDD) associated with said caller dialing profile.

**32**. The apparatus of claim **28** wherein said calling attributes include an area code and wherein said means for determining is operably configured to determine whether said callee identifier includes a portion that matches an area code associated with said caller dialing profile.

**33**. The apparatus of claim **28** wherein said calling attribute includes a number length range and wherein said means for determining is operably configured to determine whether said callee identifier has a length within a range specified in said caller dialing profile.

**34**. The apparatus of claim **28** further comprising formatting means for formatting said callee identifier into a predefined digit format to produce a re-formatted callee identifier.

**35**. The apparatus of claim **34** wherein said formatting means is operably configured to remove an international dialing digit from said callee identifier, when said callee identifier begins with a digit matching an international dialing digit specified by said caller dialing profile associated with said caller.

**36**. The apparatus of claim **34** wherein said formatting means is operably configured to remove a national dialing digit from said callee identifier and prepend a caller country code to said callee identifier when said callee identifier begins with a national dialing digit.

**37**. The apparatus of claim **34** wherein said formatting means is operably configured to prepend a caller country code to said callee identifier when said callee identifier begins with digits identifying an area code specified by said caller dialing profile.

**38**. The apparatus of claim **34** wherein said formatting means is operably configured to prepend a caller country code and area code to said callee identifier when said callee identifier has a length that matches a caller dialing number format specified by said caller dialing profile and only one area code is specified as being associated with said caller in said caller dialing profile.

**39**. The apparatus of claim **34** wherein said means for classifying the call as a private network call is operably configured to classify said call as a private network call when said re-formatted callee identifier identifies a subscriber to the private network.

**40**. The apparatus of claim **34** wherein said means for classifying the call as a private network call is operably configured to classify the call as a private network call when said callee identifier complies with a pre-defined username format.

**41**. The apparatus of claim **34** further comprising searching means for searching a database of records to locate a Direct-Inward-Dial (DID) bank table record associating a public telephone number with said reformatted callee identifier and wherein said means for classifying the call as a private network call is operably configured to classify the call as a private network call when said DID bank table record is found and said means for classifying the call as a public network call is operably configured to classify the call as a public network call when a DID bank table record is not found.

**42**. The apparatus of claim **41** wherein said private network routing message producing means is operably configured to produce a routing message having a callee identifier set according to a username associated with said DID bank table record.

**43**. The apparatus of claim **42** wherein said private network routing message producing means is operably configured to determine whether a node associated with the reformatted callee identifier is the same as a node associated the caller identifier.

**44**. The apparatus of claim **43** wherein said private network routing means includes means for determining whether a prefix of said re-formatted callee identifier matches a corresponding prefix of a username associated with said caller dialing profile.

**45**. The apparatus of claim **44** wherein said private network routing message producing means is operably configured to produce a routing message including said caller identifier, said reformatted callee identifier and an identification of a private network node associated with said callee and to communicate said routing message to a call controller.

**46**. The apparatus of claim **43** wherein said private network routing message producing means is operably configured to perform at least one of the following: forward said call to another party, block the call and direct the caller to a voicemail server associated with the callee identifier, when said node associated with said caller identifier is the same as the node associated with said callee identifier.

**47**. The apparatus of claim **46** wherein said means for producing said private network routing message is operably configured to produce a routing message having an identification of at least one of the callee identifier, an identification of a party to whom the call should be forwarded and an identification of a voicemail server associated with the callee.

**48**. The apparatus of claim **47** further comprising means for communicating said routing message to a call controller.

**49**. The apparatus of claim **34** wherein said means for producing said public network routing message identifying a gateway to the public network comprises means for searching a database of route records associating route identifiers with dialing codes to find a route record having a dialing code having a number pattern matching at least a portion of said reformatted callee identifier.

**50**. The apparatus of claim **49** further comprising means for searching a database of supplier records associating supplier identifiers with said route identifiers to locate at least one supplier record associated with said route identifier associ-

ated with said route record having a dialing code having a number pattern matching at least a portion of said reformatted callee identifier.

**51**. The apparatus of claim **50** further comprising a routing message buffer and means for loading said routing message buffer with the reformatted callee identifier and an identification of specific routes associated respective ones of the supplier records associated with said route record and loading said routing message buffer with a time value and a timeout value.

**52**. The apparatus of claim **51** further comprising means for causing said public network routing message to include the contents of said routing message buffer and means for communicating the public network routing message to a call controller.

**53**. The apparatus of claim **28** further comprising means for causing said dialing profile to include a maximum concurrent call value and a concurrent call count value and for causing said concurrent call count value to be incremented when the user associated with said dialing profile initiates a call and for causing said concurrent call count value to be decremented when a call with said user associated with said dialing profile is ended.

**54**. A process for operating a call routing controller to establish a call between a caller and a callee in a communication system, the process comprising:

in response to initiation of a call by a calling subscriber, locating a caller dialing profile comprising a plurality of calling attributes associated with the caller; and

when at least one of said calling attributes and at least a portion of a callee identifier associated with the callee match and when the match meets a private network classification criterion, producing a private network routing message for receipt by a call controller, said private network routing message identifying an address, on a private network, the address being associated with the callee; and

when at least one of said calling attributes and said at least said portion of said callee identifier associated with the callee match and when the match meets a public network classification criterion, producing a public network routing message for receipt by a call controller, said public network routing message identifying a gateway to a public network.

**55**. The process of claim **54** wherein said private network classification criteria include:

a) said callee identifier does not begin with the same digit pattern as an international dialing digit (IDD) attribute of said callee identifier; and

b) said callee identifier does not begin with the same digit pattern as a national dialing digit (NDD) attribute of said callee identifier; and

c) said callee identifier does not begin with the same area code as an area code of said caller; and

d) said callee identifier does not have a length that is within a range of caller local number lengths; and

e) said callee identifier is a valid username.

**56**. The process of claim **55** further comprising identifying the call as a cross-domain call on the private network when said callee identifier identifies a callee that is not associated with the same network node as said caller.

**57**. The process of claim **55** further comprising:

locating a callee dialing profile for the callee when said callee identifier identifies a callee that is associated with the same network node as said caller; and

retrieving call handling information associated with the callee, where said call handing information is available, said call handing information including at least one of call blocking information, call forwarding information, and voicemail information.

**58**. The process of claim **57** further comprising, where said call handling information including said call blocking information is available, blocking the call when said call blocking information identifies the caller as a caller from whom calls are to be blocked from being established with the callee.

**59**. The process of claim **57** further comprising, where said call handling information including said call forwarding information is available, causing said call forwarding information to be included in said private network routing message.

**60**. The process of claim **57** further comprising, where said call handling information including said voicemail information is available, causing said voicemail information to be included in said private network routing message.

**61**. The process of claim **54** further comprising associating at least one direct inward dial record with at least one subscriber to said communication system, each of said at least one direct inward dial records comprising a field storing a direct inward dial number associated with said at least one subscriber.

**62**. The process of claim **61** wherein said public network classification criteria include:

a) said callee identifier begins with the same digit pattern as an international dialing digit (IDD) attribute of said callee identifier; and

b) a reformatted callee identifier produced by removing the IDD attribute from said callee identifier has no DID bank table record.

**63**. The process of claim **61** wherein said public network classification criteria include:

a) said callee identifier begins with the same digit pattern as a national dialing digit (NDD) attribute of said callee identifier; and

b) a reformatted callee identifier produced by removing the NDD attribute from said callee identifier and including a caller country code has no DID bank table record.

**64**. The process of claim **61** wherein said public network classification criteria include:

a) said callee identifier begins with the same area code as an area code of said caller; and

b) a reformatted callee identifier produced by reformatting the callee identifier to include a caller country code has no DID bank table record.

**65**. The process of claim **61** wherein said public network classification criteria include:

a) said callee identifier has a length that is within a range of caller local number lengths; and

b) a reformatted callee identifier produced by reformatting the callee identifier to include a caller country code and area code has no DID bank table record.

**66**. The process of claim **54** wherein said plurality of calling attributes includes at least one of an international dialing digits field, a national dialing digits field, a country code field, a local area codes field, a caller minimum local length field, a caller maximum local length field, a reseller field, a maximum number of concurrent calls field and a current number of concurrent calls field.

**67**. The process of claim **61** wherein said DID record comprises a user name field, a user domain field and a DID number field.

**68**. The process of claim **54** further comprising maintaining a list of public network route suppliers and when said public network classification criterion is met identifying at

least one of said public network route suppliers that satisfies public network routing selection criteria.

**69**. The process of claim **68** wherein said producing said public network routing message comprises producing a public network routing message identifying said at least one public network route supplier that satisfies said public network routing selection criteria.

**70**. The process of claim **69** wherein producing said public network routing message comprises causing said at least one public network route supplier that satisfies said public network routing selection criteria to be placed in a preferred order.

**71**. The process of claim **70** wherein said preferred order is by at least one of rate and preferred service agreements with said at least one public network route supplier.

**72**. The process of claim **54** further comprising causing the private network routing message or the public network routing message to be communicated to a call controller to effect routing of the call.

**73**. A non-transitory computer readable medium encoded with codes for directing a processor to execute the method of claim **54**.

**74**. A call routing controller apparatus for establishing a call between a caller and a callee in a communication system, the apparatus comprising:

a processor operably configured to:

access a database of caller dialing profiles wherein each dialing profile associates a plurality of calling attributes with a respective subscriber, to locate a dialing profile associated with the caller, in response to initiation of a call by a calling subscriber; and

produce a private network routing message for receipt by a call controller, said private network routing message identifying an address, on a private network, through which the call is to be routed, when at least one of said calling attributes and at least a portion of a callee identifier associated with the callee match and when the match meets a private network classification criterion, the address being associated with the callee; and

produce a public network routing message for receipt by a call controller, said public network routing message identifying a gateway to a public network, when at least one of said calling attributes and said at least said portion of said callee identifier associated with the callee match and when the match meets a public network classification criterion.

**75**. The apparatus of claim **74** wherein said private network classification criteria include:

a) said callee identifier does not begin with the same digit pattern as an international dialing digit (IDD) attribute of said callee identifier; and

b) said callee identifier does not begin with the same digit pattern as a national dialing digit (NDD) attribute of said callee identifier; and

c) said callee identifier does not begin with the same area code as an area code of said caller; and

d) said callee identifier does not have a length that is within a range of caller local number lengths; and

e) said callee identifier is a valid username.

**76**. The apparatus of claim **75** wherein said processor is further operably configured to identify the call as a cross-domain call on the private network when said callee identifier identifies a callee that is not associated with the same network node as said caller.

**77**. The apparatus of claim **75** wherein said processor is further configured to:

access the database of caller dialing profiles to locate a callee dialing profile for the callee when said callee identifier identifies a callee that is associated with the same network node as said caller; and

retrieve call handling information associated with the callee, where said call handing information is available, said call handing information including at least one of call blocking information, call forwarding information, and voicemail information.

**78**. The apparatus of claim **77** wherein said processor is further operably configured to determine whether said call handling information including said call blocking information is available and to block the call when said call blocking information identifies the caller as a caller from whom calls are to be blocked.

**79**. The apparatus of claim **77** wherein said processor is further operably configured to determine whether said call handling information including said call forwarding information is available and to cause said call forwarding information to be included in said private network routing message.

**80**. The apparatus of claim **77** wherein said processor is further operably configured to determine whether said call handling information including said voicemail information is available and to cause said voicemail information to be included in said private network routing message.

**81**. The apparatus of claim **74** wherein said processor is further operably configured to access a database of direct inward dial records each associating at least one direct inward dial number with at least one subscriber to said communication system.

**82**. The apparatus of claim **81** wherein said public network classification criteria include:

a) said callee identifier begins with the same digit pattern as an international dialing digit (IDD) attribute of said callee identifier; and

b) a reformatted callee identifier produced by removing the IDD attribute from said callee identifier has no DID record.

**83**. The apparatus of claim **81** wherein said public network classification criteria include:

a) said callee identifier begins with the same digit pattern as a national dialing digit (NDD) attribute of said callee identifier; and

b) a reformatted callee identifier produced by removing the NDD attribute from said callee identifier and including a caller country code has no DID record.

**84**. The apparatus of claim **81** wherein said public network classification criteria include:

a) said callee identifier begins with the same area code as an area code of said caller; and

b) a reformatted callee identifier produced by reformatting the callee identifier to include a caller country code has no DID record.

**85**. The apparatus of claim **81** wherein said public network classification criteria include:

a) said callee identifier has a length that is within a range of caller local number lengths; and

b) a reformatted callee identifier produced by reformatting the callee identifier to include a caller country code and area code has no DID record.

**86**. The apparatus of claim **74** wherein said plurality of calling attributes includes at least one of an international dialing digits field, a national dialing digits field, a country code field, a local area codes field, a caller minimum local length field, a caller maximum local length field, a reseller field, a maximum number of concurrent calls field and a current number of concurrent calls field.

87. The apparatus of claim 81 wherein said DID record comprises a user name field, a user domain field and a DID number field.

88. The apparatus of claim 74 wherein said processor is further operably configured to access a list of public network route suppliers when said public network classification criterion is met and to identify at least one of said public network route suppliers that satisfies public network routing selection criteria.

89. The apparatus of claim 88 wherein said processor is further operably configured to produce a public network routing message identifying said at least one public network route supplier that satisfies said public network routing selection criteria.

90. The apparatus of claim 89 wherein said processor is further operably configured to cause said at least one public network route supplier that satisfies said public network routing selection criteria to be placed in a preferred order.

91. The apparatus of claim 90 wherein said preferred order is by at least one of rate and preferred service agreements with said at least one public network route supplier.

92. The apparatus of claim 74 wherein said processor is further operably configured to cause the private network routing message or the public network routing message to be communicated to a call controller to effect routing of the call.

93. A call routing controller apparatus for establishing a call between a caller and a callee in a communication system, the apparatus comprising:

means for accessing a database of caller dialing profiles wherein each dialing profile associates a plurality of calling attributes with a respective subscriber, to locate a dialing profile associated with the caller, in response to initiation of a call by a calling subscriber; and

means for producing a private network routing message for receipt by a call controller, said private network routing message identifying an address, on a private network, through which the call is to be routed, when at least one of said calling attributes and at least a portion of a callee identifier associated with the callee match and when the match meets a private network classification criterion, the address being associated with the callee; and

means for producing a public network routing message for receipt by a call controller, said public network routing message identifying a gateway to a public network when at least one of said calling attributes and said at least said portion of said callee identifier associated with the callee match and when the match meets a public network classification criterion.

94. The apparatus of claim 93 wherein said private network classification criteria include:

a) said callee identifier does not begin with the same digit pattern as an international dialing digit (IDD) attribute of said callee identifier; and

b) said callee identifier does not begin with the same digit pattern as a national dialing digit (NDD) attribute of said callee identifier; and

c) said callee identifier does not begin with the same area code as an area code of said caller; and

d) said callee identifier does not have a length that is within a range of caller local number lengths; and

e) said callee identifier is a valid username.

95. The apparatus of claim 94 further comprising means for identifying the call as a cross-domain call on the private network when said callee identifier identifies a callee that is not associated with the same network node as said caller.

96. The apparatus of claim 94 further comprising:

means for accessing the database of caller dialing profiles to locate a callee dialing profile for the callee when said callee identifier identifies a callee that is associated with the same network node as said caller; and

means for retrieving call handling information associated with the callee, where said call handing information is available, said call handing information including at least one of call blocking information, call forwarding information, and voicemail information.

97. The apparatus of claim 96 further comprising, where said call handling information including said call blocking information is available, means for blocking the call being established with the callee when said call blocking information identifies the caller as a caller from whom calls are to be blocked.

98. The apparatus of claim 96 further comprising, means for causing said call forwarding information to be included in said private network routing message, where said call handling information including said call forwarding information is available.

99. The apparatus of claim 96 further comprising, where said call handling information including said voicemail information is available, means for causing said voicemail information to be included in said private network routing message.

100. The apparatus of claim 93 further comprising means for accessing a database of direct inward dial records each associating at least one direct inward dial number with at least one subscriber to said communication system.

101. The apparatus of claim 100 wherein said public network classification criteria include:

a) said callee identifier begins with the same digit pattern as an international dialing digit (IDD) attribute of said callee identifier; and

b) a reformatted callee identifier produced by removing the IDD attribute from said callee identifier has no DID record.

102. The apparatus of claim 100 wherein said public network classification criteria include:

a) said callee identifier begins with the same digit pattern as a national dialing digit (NDD) attribute of said callee identifier; and

b) a reformatted callee identifier produced by removing the NDD attribute from said callee identifier and including a caller country code has no DID record.

103. The apparatus of claim 100 wherein said public network classification criteria include:

a) said callee identifier begins with the same area code as an area code of said caller; and

b) a reformatted callee identifier produced by reformatting the callee identifier to include a caller country code has no DID record.

104. The apparatus of claim 100 wherein said public network classification criteria include:

a) said callee identifier has a length that is within a range of caller local number lengths; and

b) a reformatted callee identifier produced by reformatting the callee identifier to include a caller country code and area code has no DID record.

105. The apparatus of claim 93 wherein said plurality of calling attributes includes at least one of an international dialing digits field, a national dialing digits field, a country code field, a local area codes field, a caller minimum local length field, a caller maximum local length field, a reseller field, a maximum number of concurrent calls field and a current number of concurrent calls field.

**106**. The apparatus of claim **100** wherein said DID record comprises a user name field, a user domain field and a DID number field.

**107**. The apparatus of claim **93** further comprising means for accessing a list of public network route suppliers when said public network classification criterion is met and means for identifying at least one of said public network route suppliers that satisfies public network routing selection criteria.

**108**. The apparatus of claim **107** wherein said means for producing said public network routing message comprises means for producing a public network routing message identifying said at least one public network route supplier that satisfies said public network routing selection criteria.

**109**. The apparatus of claim **108** wherein said means for producing said public network routing message comprises means for causing said at least one public network route supplier that satisfies said public network routing selection criteria to be placed in a preferred order.

**110**. The apparatus of claim **109** wherein said preferred order is by at least one of rate and preferred service agreements with said at least one public network route supplier.

**111**. The apparatus of claim **93** further comprising means for causing the private network routing message or the public network routing message to be communicated to a call controller to effect routing of the call.

* * * * *

## 8. Apple Inc. / J Lasker E-Mail dated November 5 2014 w Letter Attachment 8A

Tom,

Please see the attached letter.

Regards,
Jeff

Jeffrey V. Lasker
Legal Counsel, IP Transactions
Apple
1 Infinite Loop, MS 169-3IPL
Cupertino, CA 95014, USA
Office 408-862-1377
jlasker@apple.com

**8A. Attachment to E-mail dated November 5 2014 - Response Letter**

November 5, 2014 Via Email

Thomas E. Sawyer, Ph.D.
Chairman and CEO
Voip-Pal.com, Inc.
P.O. Box 900788
Sandy, Utah 84090
Email: tesawyer@tesawyer.com

Re: Voip-Pal.com, Inc.

Dear Tom,

I write in response to your correspondence dated October 15, 2014, which responds to my October 8, 2014 letter. As I have indicated previously, please direct all future correspondence regarding this matter to my attention.

We appreciate your effort to focus the discussion to only the '815 patent instead of the other Voip-Pal patents that are not relevant to any Apple technology for the reasons expressed in my October 8, 2104 letter. We continue to believe that even the '815 patent is not applicable to any Apple products or services.

While I appreciate a quick response from your team regarding the '815 patent, I do note that Voip-Pal still has not provided any claim charts explaining the basis of its infringement assertion, even though I have now requested that information on multiple occasions. If Voip-Pal disagrees with our assessment in this letter, I once again request that you provide detailed claim charts that illustrate how Voip-Pal contends each claim limitation is satisfied by Apple's products or services.

We have carefully reviewed Voip-Pal's response to the issues raised in my October 8 letter regarding the '815 patent, and continue to believe that Apple does not require a license to Voip-Pal's patents. We address each point raised in your correspondence below.

In my October 8, 2014 letter, I pointed out that all of the claims of the '815 patent are directed to routing telephone calls, as opposed to an instant messaging service such as iMessage. In response, you assert that the claims are directed to "communication" in general, and not limited to "calls." In particular, you cited to the following claim language (emphasis original):

**Apple Inc.**
Jeffrey V. Lasker
1 Infinite Loop, MS 169-3IPL
Cupertino, CA 95014
(408) 862-1377
jlasker @apple.com

> **1**. A process for operating a call routing controller to facilitate communication between callers and callees in a system comprising a plurality of nodes with which callers and callees are associated, the process comprising:

There are several issues with your response. First, your cited text selectively focuses on one word ("communication") in the claims, but otherwise completely ignores the surrounding text. As an initial matter, the claim itself is directed to a process for operating a "**call**" routing controller to facilitate communication between "**callers and callees**" (*i.e.,* a person that makes the telephone call and the person that receives the telephone call). Moreover, your response completely ignores the very next claim limitation following your cited passage (emphasis added):

> in response to initiation of a call by a calling subscriber, receiving a caller identifier and a callee identifier;

As can be seen by the highlighted text, the "receiving" limitation is performed in response to initiation of a "call." There are similar "call" related limitations in each of the other limitations of the claim. Thus, the claim (and all the other claims) of the '815 patent are directed to routing telephone calls. In your letter, you contend that the claims are not limited to voice calls, but can also include data. But even if calls can include data, that does not mean that all data transmissions are necessarily "calls." Indeed, text messaging is not a "call." If you have any other basis for alleging the claims are not limited to "calls," please let us know so that we can consider your basis.

In my October 8, 2014 letter, I pointed out that Voip-Pal fails to articulate how iMessage uses the "caller" information for routing, in contrast to the "callee" information distinguished during prior art. Voip-Pal's response misconstrues our position when it states that "[i]t is not correct to say that '815 **only** claims call for using the 'caller' information to determine where to route the call." (emphasis added). Our position is that even though the Applicant specifically argued during prosecution that the claimed invention routes calls, among other things, based on the "caller" information, your allegations against iMessage fails to identify any "caller" information that is used. As such, Voip-Pal's response still continues to be deficient in this regard since it fails to identify what Voip-Pal contends satisfies the "caller" information in iMessage.

In my letter dated October 8, 2014, I also pointed out Voip-Pal's contention that "Internet" is a "private" network runs contrary to the specification. In response, Voip-Pal cites to several passages from the specification. But those passages only underscore the

point that the Internet is not a "private" network. In support of its contention, Voip-Pal first cites the following passage (emphasis original):

> 2. Description of Related Art
> Internet protocol (IP) telephones are typically personal computer (PC) based telephones connected within an IP network, such as the public Internet or a private network of a large organization. These IP telephones have installed "voice-

This passage itself distinguishes between the Internet (which is public) and a private network. The other cited passage likewise does not support Voip-Pal's contention that the "Internet" is a "private" network. In particular, Voip-Pal cites the following passage (emphasis in the original):

> It should be noted that throughout the description of the embodiments of this invention, the IP/UDP addresses of all elements such as the caller and callee telephones, call controller, media relay, and any others, will be assumed to be valid IP/UDP addresses directly accessible via the Internet or a private IP network, for example, depending on the specific implementation of the system. As such, it will be assumed, for

The disjunctive use of "private IP network" and "Internet" in this passage underscores the point that the "Internet" is different from a "private" network. It does not suggest that the Internet is a private network.

Voip-Pal's response also contends that the '815 patent is applicable to Facetime and Facetime Audio for the same reasons as it is applicable to iMessage. In this regard, Voip-Pal states that both Facetime "applications run calls between private subscribers, while can send SMS to legacy PSTN network. In other words, Voip-Pal acknowledges that, even under its own understanding, Facetime involves only a private-to-private connection and no "public" connection. In view of this, we fail to understand how the '815 patent can be applicable to Facetime, particularly since all of the claims call for classifying the call as either a private network call or a public network call before taking an action. While Voip-Pal cites to several dependent claims in its response (purportedly to show the relevance of the '815 patent to Facetime), we note that all of those claims depend from the independent claims that require classifying the call as either private or public network. As such, even these dependent claims include a claim limitation that is not applicable to FaceTime.

For at least the reasons set forth above, we continue to believe that Apple does not need a license to Voip-Pal's patents. If you disagree with our assessment and have any additional information for us to consider (including detailed claim charts explaining the basis for your assertion), please forward them to me for further consideration.

Regards,

Jeffrey V. Lasker
Legal Counsel, IP Transactions

**9. Email to Apple Inc. / J Lasker dated November 10 2014 w Attachment 9A**

Thomas E. Sawyer <tesawyer@tesawyer.com> 11/10/14

to Jeffrey

Jeff,

Please review the attached letter responding to you letter of November 5, 2014. You continue to allege that Apple is not using any of the patented technology developed by Voip-Pal. I know that it is part of your job as Apple's counsel for IP to take the position of not violating any patented technology, but it seems obvious to independent expert consultants that Apple is using Voip-Pal's technology. If we can agree to a mutual non-disclosure, non-compete, we can prepare the Chart of Claims that you have requested. Without the specifics of the Apple functionality, we cannot be certain of the claims validity.

I look forward to your response with technical input, rather than the meaning of a call, which seems evident to all of both in-house senior technical staff and independent senior consultants that have provided input on the matter.

Thanks and have a great week.

Dr. Thomas E. Sawyer

**9A. Attachment to E-Mail dated November 10 2014**

**Voip-Pal**
One Number · One World
10900 NE 4th Street, Suite 2300
Bellevue, WA, 98004

November 10, 2014

Jeffrey V. Lasker
Legal Counsel, IP Transactions
Apple Inc.
1 Infinite Loop, MS 169-3IPL
Cupertino, CA 95014

Re: Letter of November 5, 2014

Dear Jeffrey,

In order to respond specifically to the issues raised in your letter of November 5, 2015, I have reproduced sections from your letter and responses from our engineers (in **green**):

There are several issues with your response. First, your cited text selectively focuses on one word ("communication") in the claims, but otherwise completely ignores the surrounding text. As an initial matter, the claim itself is directed to a process for operating a "call" routing ~~controller~~ to facilitate communication between ~~"callers and~~ callees" (i.e., a person that makes the telephone call and the person that receives the telephone call). Moreover, your response completely ignores the very next claim limitation following your cited passage (emphasis added):

**"Call," "Caller," "Callee": this terminology refers to calls in general.**
**This is not specific to a telephone call, but any call, including messaging calls.**
**Therefore, any call (i.e., messaging call).**

in response to initiation of a call by a calling subscriber,
receiving a caller identifier and a callee identifier;

As can be seen by the highlighted text, the "receiving" limitation is performed in response to initiation of a "call." There are similar "call" related limitations in each of the other ~~limitations of~~ the claim. Thus, the claim (and all the other claims) of the '815 patent are directed to routing telephone calls. In your letter, you contend that the claims are not limited to voice calls, but can also include data. ~~But even if calls can include data, that does~~ not mean that all data transmissions are necessarily "calls." Indeed, text messaging is not a "call." If you have any other basis for alleging the claims are not limited to "calls," please let us know so that we can consider your basis.

Voip-Pal
One Number · One World
10900 NE 4th Street, Suite 2300
Bellevue, WA, 98004

**In the past, messages like email were subject to deferred delivery. They were not calls by today's standards. Modern messages are transmitted instantly. They require signalling to set up a communication session for transferring the message. Thus, by industry definition this is a call.**

In my October 8, 2014 letter, I pointed out that Voip-Pal fails to articulate how iMessage uses the "caller" information for routing, in contrast to the "callee" information distinguished during prior art. Voip-Pal's response misconstrues our position when it states that "[i]t is not correct to say that '815 only claims call for using the 'caller' information to determine where to route the call." (emphasis added). Our position is that even though the Applicant specifically argued during prosecution that the claimed invention routes calls, among other things, based on the "caller" information, your allegations against iMessage fails to identify any "caller" information that is used. As such, Voip-Pal's response still continues to be deficient in this regard since it fails to identify what Voip-Pal contends satisfies the "caller" information in iMessage.

**Given the scale of the current iMessage user base, Apple's private network of supporting servers is geographically and logically distributed, resulting in a multi-node network. When setting up a message transfer, servers must decide whether caller and callee are on the same node or different nodes. If they are on different nodes, the servers must then determine the best path between the nodes. Therefore, the RBR caller and callee identifier procedure is being applied.**

In my letter dated October 8, 2014, I also pointed out Voip-Pal's contention that "Internet" is a "private" network runs contrary to the specification. In response, Voip-Pal cites to several passages from the specification. But those passages only underscore the point that the Internet is not a "private" network. In support of its contention, Voip-Pal first cites the following passage (emphasis original):

> 2. Description of Related Art
>
> Internet protocol (IP) telephones are typically personal computer (PC) based telephones connected within an IP network, such as the public Internet or a private network of a large organization. These IP telephones have installed "voice-

This passage itself distinguishes between the Internet (which is public) and a private network. The other cited passage likewise does not support Voip-Pal's contention that the "Internet" is a "private" network. In particular, Voip-Pal cites the following passage (emphasis in the original):

Voip-Pal
One Number · One World
10900 NE 4th Street, Suite 2300
Bellevue, WA, 98004

It should be noted that throughout the description of the embodiments of this invention, the IP/UDP addresses of all elements such as the caller and callee telephones, call controller, media relay, and any others, will be assumed to be valid IP/UDP addresses directly accessible via the Internet or a private IP network, for example, depending on the specific implementation of the system. As such, it will be assumed, for

The disjunctive use of "private IP network" and "Internet" in this passage under- scores the point that the "Internet" is different from a "private" network. It does not suggest that the Internet is a private network.

**In a previous response, we have shown that the Internet consists of public networks. Inside these public networks, private networks such as Facebook, Apple, Vonage, Viber, etc are operating. The private networks that operate inside the public networks consist of supporting servers, with which subscribers become associated. For example, suscribers connect to the private network of Apple via public Internet access through Verizon wireless.**

Voip-Pal's response also contends that the '815 patent is applicable to Facetime and Facetime Audio for the same reasons as it is applicable to iMessage. In this regard, Voip-Pal states that both Facetime "applications run calls between private subscribers, while can send SMS to legacy PSTN network. In other words, Voip-Pal acknowledges that, even under its own understanding, Facetime involves only a private-to-private connection and no "public" connection. In view of this, we fail to understand how the '815 pa- tent can be applicable to Facetime, particularly since all of the claims call for classifying the call as either a private network call or a public network call before taking an action. While Voip-Pal cites to several dependent claims in its response (purportedly to show the relevance of the '815 patent to Facetime), we note that all of those claims depend from the independent claims that require classifying the call as either private or public network. As such, even these dependent claims include a claim limitation that is not applicable to FaceTime.

**We agree that Facetime audio is only a private-to-private connection and no "public" connection, but it still requires a call classification procedure in order to route the calls in a multi-node enviroment. This functionality is covered by the 815 Patent.**

For at least the reasons set forth above, we continue to believe that Apple does not need a license to Voip-Pal's patents. If you disagree with our assessment and have any additional information for us to consider (including detailed claim charts explaining the basis for your assertion), please forward them to me for further consideration.

**Voip-Pal**

One Number · One World

10900 NE 4th Street, Suite 2300
Bellevue, WA, 98004

Voip-Pal engineers based part of their reports on publicly available information. Your continued requests for Voip-Pal to provide Apple with detailed claim charts will only be possible if you would disclose iMessaging architecture for our engineers to review. Of course, Voip-Pal and its engineers will sign a mutual non-disclosure/confidentiality document with Apple prior to such disclosure.

iMessaging

Apple uses a cloud-based system within which decisions on routing text messages are made. When text messages are routed from iPhone to iPhone their infrastructure ensures that both devices - regardless of their phone number - route messages through the Internet. When they see a text message from an iPhone to a phone number without an associated Apple ID, they route the message through the phone network, rather than the Internet. This decision-making and routing where decisions are made on call (or message) routing based on subscriber membership in a call plan through either an IP Network or through a phone network is exactly the type of routing that is described in the RBR patent. We feel confident Voip-Pal has demonstrated that the basic attributes of RBR patents are being utilized by Apple Messaging. It appears that you, as legal counsel for Apple's IP, are attempting to impede the obvious conclusion that Apple is using Voip-Pal's patented technology, more specifically RBR's functionalities.

It is hoped that this response, in conjunction with earlier correspondence, provides sufficient evidence for Apple to acquire a license to Voip-Pal's patented technologies, or to purchase the patents.

Regards,

Dr. Thomas E. Sawyer
Director, Special Projects
Telephone: 801.944.4090
Cell: 801.860.9944
Email: tesawyer@tesawyer.com

**10. Apple Inc. / J Lasker E-Mail December 22 2014 w Attachment 10A**

From: Jeffrey Lasker <jlasker@apple.com>
Date: Mon, 22 Dec 2014 08:11:07 -0800
Subject: Voip-Pal.com, Inc.
To: tesawyer@tesawyer.com X-
Mailer: Apple Mail (2.1990.1)
X-Brightmail-Tracker:

Tom,

Please see the attached letter.

I wish you happy holidays and a wonderful New Year.

Regards,
Jeff

Jeffrey V. Lasker
Legal Counsel, IP Transactions
Apple
1 Infinite Loop, MS 169-3IPL
Cupertino, CA 95014, USA
Office 408-862-1377
jlasker@apple.com

**10A. Attachment to E-Mail dated December 22 2014**

December 22, 2014 Via Email

Thomas E. Sawyer, Ph.D.
Chairman and CEO
Voip-Pal.com, Inc.
P.O. Box 900788
Sandy, Utah 84090
Email: tesawyer@tesawyer.com

Re: Voip-Pal.com, Inc.

Dear Tom,

I am in receipt of your letter dated November 10, 2014. After carefully reviewing Voip-Pal's response, we remain unpersuaded that the '815 patent has any applicability to any Apple products or services for the reasons expressed in my previous letters. Voip-Pal's continued inability to provide the requested claim charts only further underscores the disconnect between the '815 patent's claims and any Apple technology. Indeed, your response concedes that Voip-Pal lacks the specifics of the Apple functionality, and, as such, Voip-Pal "cannot be certain of the claims validity." We are troubled by Voip-Pal's persistent allegations that the '815 patent is relevant to Apple technology despite (1) its admission that it lacks the proper understanding of "the Apple functionality" and (2) its own concerns regarding the claims' validity.

You request that Apple share the iMessage architecture with Voip-Pal pursuant to a mutual non-disclosure agreement. While we appreciate your offer, we do not believe that is necessary or would be productive as the claims of the '815 patent themselves demonstrate that the '815 patent has no applicability to iMessage, or even Facetime. As I explained in detail in my October 8 and November 5 letters, multiple limitations of the '815 are missing from iMessage and Facetime. Our conclusions are based on publicly available information. For example, the publicly known fact that text messages of iMessage are not telephone calls as required by the claims.

**Apple Inc.**
Jeffrey V. Lasker
1 Infinite Loop, MS 169-3IPL
Cupertino, CA 95014
(408) 862-1377
jlasker @apple.com

In view of our non-infringement positions, we believe any assertion against Apple would be objectively baseless. Should you have any questions, please contact me.

Regards,

Jeffrey V. Lasker
Legal Counsel, IP Transactions

**11. Letter to Apple dated November 30 2015 sent by Registered Post**

VoIP-Pal.com Inc.
10900 NE Street, Suite 2300
Bellevue, WA 98004

Via E-mail: jlasker@apple.com
and Registered Mail

November 30 2015

**Apple Inc.**
1 Infinite Loop, MS 169-3IPL
Cupertino, CA 95014

Attention: Jeffrey V. Lasker
Legal Counsel, IP Transactions

**Re: VoIP-Pal.com Inc. Patent(s)**

Dear Mr. Lasker:

I am the Chief Executive Officer of VoIP-Pal.com Inc. (VoIP-Pal). I am aware that there was an exchange of communications between your colleague Ms. Denise Kerstein, yourself and Dr. Thomas E. Sawyer, former Chief Executive Officer of VoIP-Pal, through the fall of 2014. This letter is an update to that earlier communication.

Early last month, the United States Patent Office issued a continuation of our routing patent US 8,542,815. The continuation patent US 9,179,005 clarifies that routing of messaging and other electronic communications are covered by US 8,542,815. For your convenience, I am also including a table of VoIP-Pal patents.

Please feel free to contact me directly if you wish to initiate a conversation about these patents. My contact information is as follows:

E-mail: emil@emilmalak.ca
Telephone: (604) 889-0516
Address: 773 Hornby Street
Vancouver, BC V6Z1S4
Canada

I am copying this letter to Ms. Kerstein, who, I understand, has recently been speaking directly with Mr. Ray Leon, an advisor to the CEO of Voip-Pal, also copied on this letter.

Respectfully,

Emil Malak
Chief Executive Officer and Director

EM/rt:enclosures

Cc: Denise Kerstein <dkerstein@apple.com>; Ray Leon <rayleon11@gmail.com>

## VoIP-Pal / Digifonica Active U.S. Patent Matters as of November 6, 2015

| Country Code | Filing Date/ National Phase Entry Date | Application/ Patent Number | Title\Subject | File Status |
|---|---|---|---|---|
| US | 05/03/2010 | 8422507 | INTERCEPTING VOICE OVER IP COMMUNICATIONS AND OTHER DATA COMMUNICATIONS | Issued |
| US | 15/04/2013 | 9143608 | INTERCEPTING VOICE OVER IP COMMUNICATIONS AND OTHER DATA COMMUNICATIONS | Issued |
| US | 17/07/2015 | 14/802929 | INTERCEPTING VOICE OVER IP COMMUNICATIONS AND OTHER DATA COMMUNICATIONS | Pending |
| US | 01/03/2010 | 8542815 | PRODUCING ROUTING MESSAGES FOR VOICE OVER IP COMMUNICATIONS | Issued |
| US | 13/08/2013 | 9179005 | PRODUCING ROUTING MESSAGES FOR VOICE OVER IP COMMUNICATIONS | Issued |
| US | 17/09/2013 | 9137385 | DETERMINING A TIME TO PERMIT A COMMUNICATIONS | Issued |
| US | 17/09/2013 | 8774378 | ALLOCATING CHARGES FOR COMMUNICATIONS SERVICES | Issued |
| US | 07/07/2014 | 14/325181 | ALLOCATING CHARGES FOR COMMUNICATIONS SERVICES | Pending |
| US | 14/09/2015 | 14/853705 | DETERMINING A TIME TO PERMIT A COMMUNICATIONS SESSION TO BE CONDUCTED | Pending |
| US | 07/10/2015 | 14/877570 | PRODUCING ROUTING MESSAGES FOR VOICE OVER IP COMMUNICATIONS | Pending |
| US | 05/03/2010 | 8537805 | EMERGENCY ASSISTANCE CALLING FOR VOICE OVER IP COMMUNICATIONS SYSTEMS | Issued |
| US | 15/08/2013 | 13/968217 | EMERGENCY ASSISTANCE CALLING FOR VOICE OVER IP COMMUNICATIONS SYSTEMS | Pending |
| US | 27/01/2011 | 8630234 | MOBILE GATEWAY | Issued |
| US | 24/09/2013 | 14/035806 | MOBILE GATEWAY | Pending |
| US | 16/03/2012 | 8,675,566 | UNINTERRUPTED TRANSMISSION OF INTERNET PROTOCOL TRANSMISSIONS DURING ENDPOINT CHANGES | Issued |
| US | 27/11/2013 | 9154417 | UNINTERRUPTED TRANSMISSION OF INTERNET PROTOCOL TRANSMISSIONS DURING ENDPOINT CHANGES | Issued |
| US | 17/07/2015 | 14/802872 | UNINTERRUPTED TRANSMISSION OF INTERNET PROTOCOL TRANSMISSIONS DURING ENDPOINT CHANGES | Pending |

**VoIP-Pal / Digifonica Active Brazil, Canada, Europe, Indonesia, India Patent Matters as of November 6, 2015**

| Country Code | Filing Date/ National Phase Entry Date | Application Number | Title/Subject | File Status |
|---|---|---|---|---|
| BR | 04/05/2009 | PI0718312-7 | PRODUCING ROUTING MESSAGES FOR VOICE OVER IP COMMUNICATIONS | Awaiting Examination |
| BR | 29/05/2009 | PI0719682-2 | INTERCEPTING VOICE OVER IP COMMUNICATIONS AND OTHER DATA COMMUNICATIONS | Awaiting Examination |
| | | | | |
| CA | 30/04/2009 | 2668025 | PRODUCING ROUTING MESSAGES FOR VOICE OVER IP COMMUNICATIONS | **Allowed - Issue Fee Due April 14, 2016** |
| CA | 25/05/2009 | 2670510 | INTERCEPTING VOICE OVER IP COMMUNICATIONS AND OTHER DATA COMMUNICATIONS | Pending |
| CA | 24/09/2009 | 2681984 | EMERGENCY ASSISTANCE CALLING FOR VOICE OVER IP COMMUNICATIONS SYSTEMS | Pending |
| CA | 26/01/2011 | 2732148 | MOBILE GATEWAY | Response Due Feb 18, 2016 |
| CA | 15/03/2013 | 2812174 | UNINTERRUPTED TRANSMISSION OF INTERNET PROTOCOL TRANSMISSIONS DURING ENDPOINT CHANGES | Pending |
| | | | | |
| EP | 29/05/2009 | 7816106.4 | PRODUCING ROUTING MESSAGES FOR VOICE OVER IP COMMUNICATIONS | Awaiting Examination |
| EP | 24/06/2009 | 7855436.7 | INTERCEPTING VOICE OVER IP COMMUNICATIONS AND OTHER DATA COMMUNICATIONS | Awaiting Examination |
| EP | 28/02/2011 | 9802316.1 | MOBILE GATEWAY | Awaiting Examination |
| EP | 17/04/2012 | 9849358.8 | UNINTERRUPTED TRANSMISSION OF INTERNET PROTOCOL TRANSMISSIONS DURING ENDPOINT CHANGES | **Allowed - Notice of Intention to grant rcvd July 2015** |
| | | | | |
| ID | 01/05/2009 | WOO 2009 01165 | PRODUCING ROUTING MESSAGES FOR VOICE OVER IP COMMUNICATIONS | Reinstated |
| ID | 27/05/2009 | WOO 2009 01414 | INTERCEPTING VOICE OVER IP COMMUNICATIONS AND OTHER DATA COMMUNICATIONS | Response to outstanding Examiners Report filed Aug 31, 2015 |
| | | | | |
| IN | 29/05/2009 | 1047/MUMNP/2009 | PRODUCING ROUTING MESSAGES FOR VOICE OVER IP COMMUNICATIONS | Examination Requested |
| IN | 29/06/2009 | 1227/MUMNP/2009 | INTERCEPTING VOICE OVER IP COMMUNICATIONS AND OTHER DATA COMMUNICATIONS | Examination Requested |

**12. Apple Inc. / J Lasker E-mail dated December 8 2015 w Attachment 12A**

---

From: jlasker@apple.com <jlasker@apple.com> on behalf of Jeffrey Lasker <jlasker@apple.com>
Sent: December 8, 2015 9:46 AM
To: Emil Malak
Cc: dkerstein@apple.com; rayleon11@gmail.com
Subject: Re: VoIP-Pal.com Inc. Patents

Emil,

Please see the attached letter.

Regards,
Jeff

Jeffrey V. Lasker
Legal Counsel, IP Transactions
Apple
1 Infinite Loop, MS 169-3IPL
Cupertino, CA 95014, USA
Office 408-862-1377
jlasker@apple.com

This email and any attachments may be privileged and may contain confidential information intended only for the recipient(s) named above. Any other distribution, forwarding, copying or disclosure of this message is strictly prohibited. If you have received this email in error, please notify me immediately by telephone or return email, and delete this message from your system.

**12A. Attachment to E-mail dated December 8 2015**

December 8, 2015 Via Email

Emil Malak
CEO & Director
Voip-Pal.com, Inc.
773 Hornby Street
Vancouver, BC V6Z1S4
Canada
Email: emil@emilmalak.ca

Re: Voip-Pal.com, Inc.

Dear Mr. Malak,

I am in receipt of your letter dated November 30, 2015 in which note that a continuation patent (U.S. No. 9,179,004) to U.S. Patent No. 8,542,815 has issued since our last communication with VoIP-Pal back in late 2014. We have reviewed the newly issued '004 patent, and believe that this patent is also inapplicable to Apple products or services for at least the same reasons we identified in our previous correspondence relating to the '815 patent. Thus, as noted previously, we do not believe that any license to VoIP-Pal's patents is necessary. To the extent you disagree, we request that you provide detailed claim charts supporting your contentions.

Your letter also notes that Ray Leon of VoIP-Pal has been in contact with my colleague Denise Kerstein. Denise informed Ray that we are not interested in acquiring Voip-Pal's patents.

Regards,

Jeffrey V. Lasker
Legal Counsel, IP Transactions

**Apple Inc.**
Jeffrey V. Lasker
1 Infinite Loop, MS 169-3IPL
Cupertino, CA 95014
(408) 862-1377
jlasker@apple.com

**13. E-mail to Apple sent at 3:24 PM on December 9 2015 w Attachment 13A**

---

From: Emil Malak
Sent: December 9, 2015 3:24 PM
To: Jeffrey Lasker
Cc: dkerstein@apple.com; rayleon11@gmail.com
Subject: Re: VoIP Pal.com Inc. Patents

Jeff:

Please see the attached letter.

Regards,
Emil

Emil Malak
CEO & Director
VoIP Pal.com Inc.

**13A. Attachment to E-Mail sent at 3:24 PM on December 9 2015**

VoIP-Pal.com Inc.
10900 NE Street, Suite 2300
Bellevue, WA 98004

Via E-mail: jlasker@apple.com

December 9 2015

**Apple Inc.**
1 Infinite Loop, MS 169-3IPL
Cupertino, CA 95014

Attention: Jeffrey V. Lasker
Legal Counsel, IP Transactions

**Re: VoIP-Pal.com Inc.**

Dear Mr. Lasker:

We are in receipt of your letter dated December 8,2015, in which you respond to our letter of November 30, 2015 informing Apple of the granting of Voip-Pal's continuation Patent # 9,179,005 which further clarifies the '815 patent's claims.

However, in your above-referenced letter, you refer to patent 9,179,004, which has nothing to do with Voip-Pal's classification and routing patents. In the interests of accuracy, we reviewed our letter to you regarding this matter, and, in that letter, we correctly identified our continuation patent number as 9,179,005. We attach a copy of that letter for your reference, and wish to bring this error to your immediate attention.

Therefore, we wish to ask if your response to our letter was with regard to patent 9,179,004, or if you were indeed responding to the continuation patent of 8,542,815, which is, in fact, U.S Patent # **9,179,005**?

We have also attached our recent Technical Overview and Comparison Table for these two patents.

We look forward to your reply.

Respectfully,

Emil Malak
Chief Executive Officer and Director

Cc: Denise Kerstein / Ray Leon

# Technical Overview

## Why are Voip-Pal's Classification and Routing Patent US 8542815 and US 9179005 Continuation Patent fundamental to current telecommunications infrastructure?

The patenting of **Dynamic Call Classification** is a landmark achievement in the world of modern telecommunications. These patents articulate the technology required to classify and route "call sessions" over a complex multiple node structure, whether private or public, or any combination of thereof, all of which may include voice, messaging, video and include M2M (Machine to Machine).

The closest prior art merely disclosed **static classification**: for example, by the amount of money the subscriber has paid, or by available bandwidth, or some other simple criteria. From the earliest days of phone communication, calls were routed solely using the **callee** number. Our patents (the first in the industry to do so) utilize **caller** attributes (in addition to **callee** id) to call classification, making it **dynamic**).

Prior to 2005, when legacy PSTN dominated the world, call routing was primitive (akin to the AOL dial up internet model). After 2005, multiple private Internet clouds were developed (e.g., Vonage, Apple, Facebook, Google, etc.), each of them being geographically distributed over multiple nodes, and the routing decisions became increasingly complex: How could we route these communications? Via PSTN or via private clouds in the Internet (and, if the latter, to which node)? Prior to 2005, most companies were monetizing by routing PSTN calls via the Internet. We predicted that the vast majority of future communication will be not to PSTN, but between multiple private nodes, and called it a 'Private' call in our patents.

Today, millions of people are registered with those private nodes of social portals, and communicating with each other seamlessly. Private call classification criteria, using both callee and caller information, are deployed by all social portals and carriers. They help to connect subscribers either on the same node, or between different nodes. Digifonica envisioned this structure PRIOR to this massive deployment and described the technology, structure and methodology in all of now-issued patents.

Voip-Pal's 815' and 005' patents cover not only telephony audio/video calls but also modern messaging, including M2M (intelligent assets). 'Modern' means: messages must be able to accommodate and provide immediate real-time response (WhatsApp, Facebook Messenger, iMessage, Instagram, Google Hangouts). Machine-to-Machine intelligent communications requires real-time routing of messages in complex networks.

Online payments have at least four parties involved, most of them use geographically distributed redundant multi-node structure. For the financial transactions to succeed, they must be routed dynamically in real-time.

Long-awaited Voice-over-LTE (VoLTE) deploys functionality in its IMS (IP Multimedia Subsystem) which is very similar to the 815' and 005' patents.

## How is it that Voip-Pal has developed these 815' and 005' patents, rather than another telecommunications company?

In the years 2003-2005, Digifonica (a wholly owned subsidiary of Voip-Pal) had the advantage of not having to support existing customers or legacy systems (there were none). We had the opportunity to start from a "blank slate" while taking advantage of vast industry experience accumulated by that time. All companies before 2005 were developing their own systems, such as Cisco with its H323. Digifonica employed top professionals in the open-source Linux community, some of which are now well-known and successful (e.g., Sippy Software, Inc., www.sippysoft.com). Three PhDs with various engineering backgrounds held the top positions at the Company. Digifonica had a vision – which it implemented in the three geographically distributed nodes, tested, and patented the core solutions. Today, Voip-Pal's 815' and 005' solutions have been proven by the entire telecommunications industry, who are deploying them virtually everywhere.

## Technical Comparison Table for Commonly Used Systems &

## VOIP-PAL'S PATENTS 8,542,815 & 9,179,005

| Systems That Are Presently In Use | US 8542815 Producing Routing Messages for Voice over IP Communications | US 9179005 Producing Routing Messages for Voice over IP Communications |
|---|---|---|
| Geographically distributed multi-node **Private** provider networks including Machine to Machine (M2M), Internet of Things (IoT) intelligent asset management and instant messaging systems (which may include, text, voice and/or video) with the subscribers (humans or machines) associated with those nodes | A process for operating a call routing controller to facilitate **communication** between callers and callees in a system comprising a plurality of nodes with which callers and callees are associated, the process comprising: | A process for producing a routing message for routing **communications**<br><br>between a caller and a callee in a communication system, the process comprising: |
| Subscriber 'caller' chooses destination 'callee' number, account, other identifier, or any kind of application-level destination address and initiates the communication. The provider's system (phone and/or server) receives caller and callee identifiers | In response to initiation of a call by a calling subscriber, receiving a caller identifier and a callee identifier; | Using a caller identifier associated with the caller to locate a caller dialing profile comprising a plurality of calling attributes associated with the caller; |
| The provider's system locates subscriber/machine account, with associated subscriber attributes, defining how and where subscriber may be available in provider's network - physically or logically | Locating a caller dialing profile comprising a username associated with the caller and a plurality of calling attributes associated with the caller; | See below → |
| The provider's system matches a portion of the destination 'callee' identifier to the subscriber 'caller' attributes | Determining a match when at least one of said calling attributes matches at least a portion of said callee identifier; | See below → |
| Simplified example:<br><br>- if callee identifier is totally different from caller attributes, that's a public communication to another provider cloud<br><br>- if callee identifier is a bit similar to caller attributes, that's a private call between provider's subscribers on different nodes | Classifying the call as a public network call when said match meets public network classification criteria and classifying the call as a private network call when said match meets private network classification criteria; | See below → |

| | | |
|---|---|---|
| - if callee identifier is very similar to caller attributes, that's a private call between subscribers on the same node | | |
| If the communication is identified as **Private** call between nodes of the same provider, it is sent over the Internet to **another node**. If callee is on the same node as caller, call stays on the **same node**. | When the call is classified as a private network call, producing a private network routing message for receipt by a call controller, said private network routing message identifying an address, on the private network, associated with the callee; | When at least one of said calling attributes and at least a portion of a callee identifier associated with the callee meet private network classification criteria, producing a private network routing message for receipt by a call controller, said private network routing message identifying an address, on the private network, associated with the callee; and |
| If the communication is identified as **Public** call between different provider's clouds, or PSTN, it is sent to the gateway to another provider, or PSTN telco. | When the call is classified as a public network call, producing a public network routing message for receipt by the call controller, said public network routing message identifying a gateway to the public network. | When at least one of said calling attributes and at least a portion of said callee identifier meet a public network classification criterion, producing a public network routing message for receipt by the call controller, said public network routing message identifying a gateway to the public network. |

**14. Apple Inc. E-mail received at 3:59 PM on December 9 2015 w Attachment 14A**

From: Jeffrey Lasker <jlasker@apple.com>
Date: 12-09-2015 3:59 PM (GMT-08:00)
To: Emil Malak <emil@emilmalak.ca>
Cc: rayleon11@gmail.com
Subject: Re: VoIP-Pal.com Inc. Patents

Emil,

The reference to the '004 patent was indeed an error. Attached is a corrected letter.

Regards,
Jeff

**14A. Attachment to E-mail received at 3:59 PM on December 9 2015**

December 8, 2015 Via Email

Emil Malak
CEO & Director
Voip-Pal.com, Inc.
773 Hornby Street
Vancouver, BC V6Z1S4
Canada
Email: emil@emilmalak.ca

Re: Voip-Pal.com, Inc.

Dear Mr. Malak,

I am in receipt of your letter dated November 30, 2015 in which note that a continuation patent (U.S. No. 9,179,005) to U.S. Patent No. 8,542,815 has issued since our last communication with VoIP-Pal back in late 2014. We have reviewed the newly issued '004 patent, and believe that this patent is also inapplicable to Apple products or services for at least the same reasons we identified in our previous correspondence relating to the '815 patent. Thus, as noted previously, we do not believe that any license to VoIP-Pal's patents is necessary. To the extent you disagree, we request that you provide detailed claim charts supporting your contentions.

Your letter also notes that Ray Leon of VoIP-Pal has been in contact with my colleague Denise Kerstein. Denise informed Ray that we are not interested in acquiring Voip-Pal's patents.

Regards,

Jeffrey V. Lasker
Legal Counsel, IP Transactions

**Apple Inc.**
Jeffrey V. Lasker
1 Infinite Loop, MS 169-3IPL
Cupertino, CA 95014
(408) 862-1377
jlasker@apple.com